hy-gain

23-CHANNEL
SOLID STATE 4-WATT MOBILE
CITIZENS TWO-WAY RADIO

MODEL 681

INSTRUCTION MANUAL

General Description

The 681 is a compact completely solid state unit providing high reliability and low power consumption. This transceiver utilizes a highly advanced, PLL frequency synthesization enabling immediate operation on all 23 channels without the need of additional crystals or adjustments. Additional features include a jack for connection of an optional telephone handset.

The 681 transceiver is designed to operate from 11.5 to 14.5 volts DC. To obtain the best results from your transceiver, it is suggested that you read all the instructions contained in this manual.

FRONT PANEL

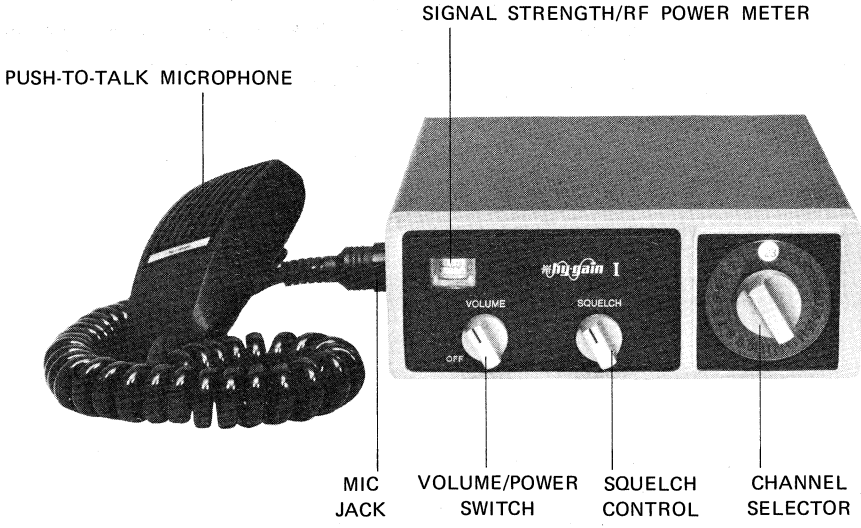

FIGURE 1

REAR PANEL

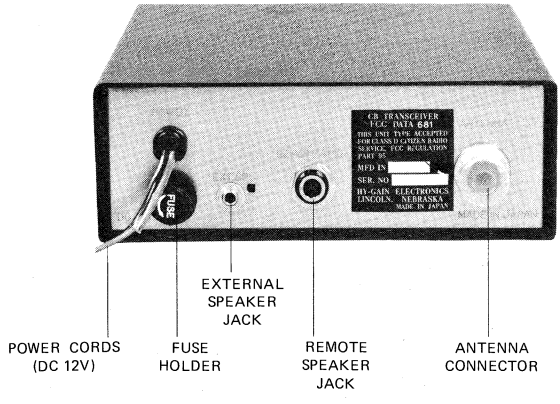

FIGURE 2

Specifications

CB Receiver Section

Circuit type	dual conversion superheterodyne with RF stage and 455 kHz ceramic filter
Frequency	23 P.L.L.-controlled channels in the 27 MHz Citizens Band
Sensitivity	0.7μV for 10 dB (S + N)/N ratio
IF frequency	1st IF: 10.695 MHz 2nd IF: 455 kHz
Audio output	3 watts maximum
Receiving current drain	about 100 mA on Standby (no signal)

CB Transmitter Section

Frequency	23 crystal-controlled channels on 27 MHz Citizens Band.
Power input	5 watts
RF Power output	4 watts
Emission	6A3
Spurious response rejection	60 dB down
Modulation	AM, 90% typical
Range boost	yields high average modulation at average voice levels.
Transmitting current drain	less than 1.0 amp @ 12 VDC nominal
Antenna	nominal 50 ohms impedance

Installation

General Considerations

Before installing the transceiver in a car, truck, boat, etc., be sure to choose a location which is convenient to the operating controls and will not interfere with the normal functions of the driver. The transceiver may be mounted to the underside of the instrument panel or dashboard of a car, truck, boat, etc., by means of the special bracket supplied with your transceiver.

Mounting Bracket

Attach the bracket to the underside of the instrument panel using three or more screws (see Figure 3). Secure the transceiver to the bracket by means of the large thumb screws.

DC Power Connections

The 681 may be operated from a nominal 12 volts DC battery source on negative or positive ground systems.

NOTE: Before making any power connections, determine whether the vehicle has a negative or positive ground electrical system, then make the following connections:

Connect the red lead to the vehicle "+" (positive) side of the electrical system, and the black lead to the vehicle "–" (negative) side of the electrical system.

In the case of negative ground vehicles, the red lead should be connected to the accessory post on the ignition switch, the voltage regulator side of the ammeter or the accessory side of the fuse block. The black lead should be connected to the metal firewall or any other point that is connected to the vehicle chassis (ground).

In the case of positive ground vehicles, the black lead should be connected to the accessory post on the ignition switch, the voltage regulator side of the ammeter or the accessory side of the fuse block. The red lead should be connected to the metal firewall or any other point that is connected to the vehicle chassis (ground).

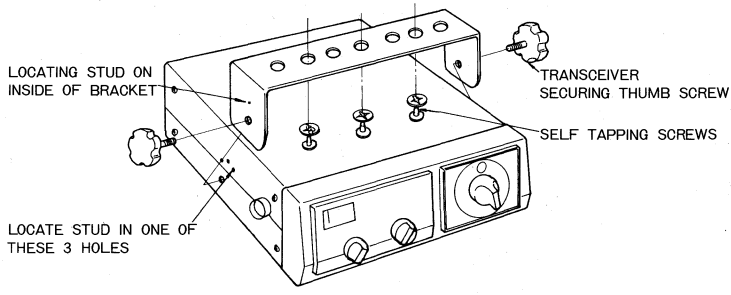

FIGURE 3 Transceiver Mounting

Antenna Connection

The antenna should be connected to the transceiver by means of coaxial cable. Either RG-58/u or RG-8/u coaxial cable may be used. The cable should be terminated with a PL-259 coaxial connector. Screw the PL-259 coaxial connector onto the antenna jack.

Caution :

Do not try to transmit without an antenna connected to the transceiver.

External Speaker (EXT. SP.) Jack

This jack can be used with any 8-ohm earphone or speaker. Inserting a 3.5 mm plug into the jack automatically silences the internal speaker.

Remote Speaker Jack

This will be used to control the built-in speaker when operating the transceiver with the optional telephone handset connected.

Noise Suppression

Tune-up

In most mobile installations, ignition noise is a problem.
Before beginning any special noise suppression steps, be sure that the vehicle is well-tuned. Clean and tighten all electrical connections, including alternator, battery, regulator and coil connections. Perform the following maintenance steps as necessary. Solder any crimped spark plug or distributor leads; clean and regap or replace spark plugs and ignition points; and check and clean alternator rings or generator brushes. Retune the engine at the manufacturer's recommended intervals.

Corrective Steps

Usually several sources of noise are present in any vehicle, with the strongest covering the others. In order to find and eliminate the maximum number of noise sources, you will have to start with the strong sources and then work back. To be sure the noise you hear comes from your vehicle and not outside it, drive to a relatively quiet location (free of man-made electrical interference such as noisy power lines, industrial noise or other vehicles). Test for noise with a weak signal on the channel and the engine off. Then start the engine. Ignition noise will probably be present at all engine speeds. If it is severe, it may make a normally readable signal unreadable.

To reduce ignition noise, install resistor-type spark plugs if these are not already installed. If non-resistance ignition wiring is used, install a 10 k-ohm suppressor resistor at each spark plug tower of the distributor. Install a coaxial capacitor at the ignition coil primary as close to the coil primary as possible. This capacitor can be purchased from an electronics parts company or an automotive electrical service company.

A "whining" noise which varies with engine speed and continues with the ignition turned off and the vehicle coasting in gear is characteristic of the alternator. Check and clean it and install an alternator filter (same sources as above).

An irregular, clicking sound which disappears at a slow idle characterizes the voltage regulator. Install a 4-ohm carbon resistor as close to the field terminal of the regulator as possible, then a .002 μF capacitor in series with and as close to the resistor as possible. Connect the capacitor to ground. See the detail drawings of Figure 4.

Irregular popping noises which vary with road surfaces indicate static discharge at any of several locations in the vehicle. Tighten loose nuts and bolts and bond large areas such as the fenders, exhaust pipe, firewall, etc. to the frame with lengths of heavy wire braid.

More Help

Figure 4 illustrates these noise suppression steps. Additional information is available in the Radio Amateur's Handbook published by the ARRL.

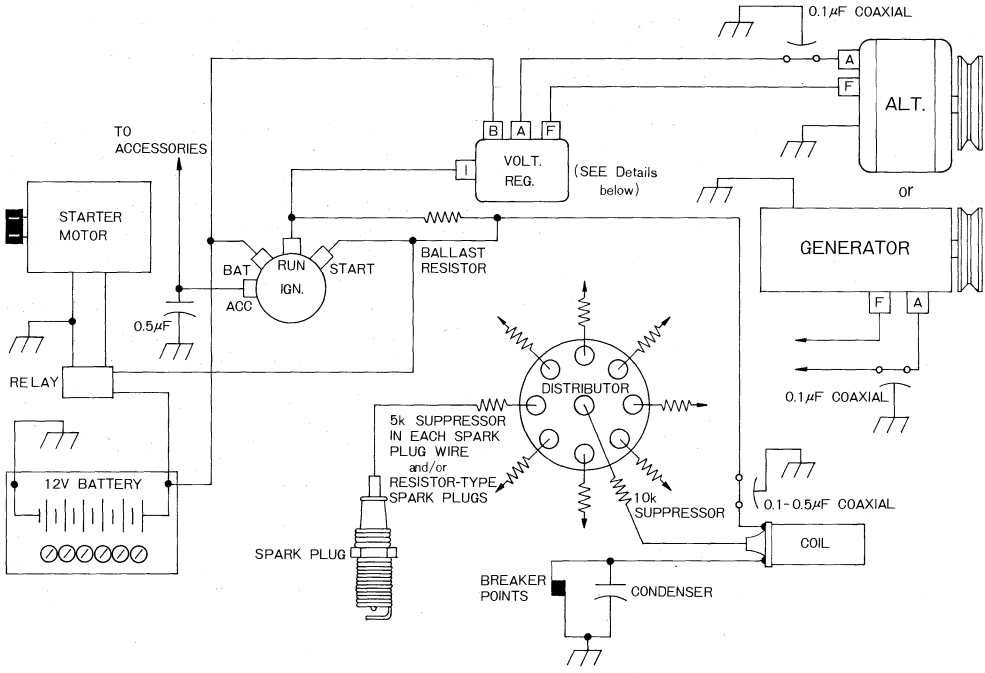

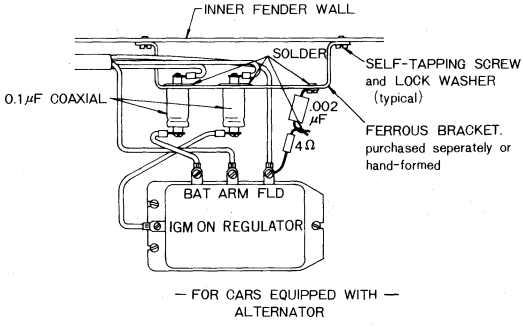

— FOR CARS EQUIPPED WITH —
ALTERNATOR

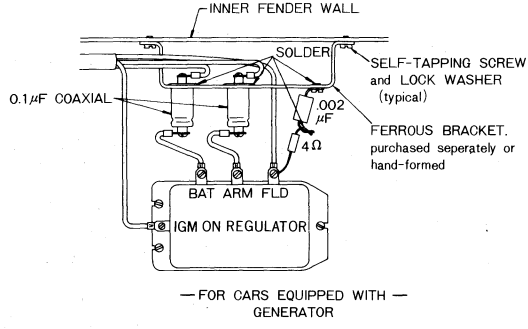

— FOR CARS EQUIPPED WITH —
GENERATOR

FIGURE 4 Noise Suppression Diagram

Use of Controls

Power/Volume switch.

To turn the power on, rotate the knob clockwise. further rotation will increase the sound output from the speaker. To turn the power off, rotate the knob counterclockwise until the click is heard indicating the power is turned off from the power supply.

Squelch Control.

This control is used to eliminate annoying background noise at no signal. To adjust the squelch control properly, first turn the knob counterclockwise until background noise is heard. Then, rotate the knob slowly clockwise until the background noise just disappears. At this point, the receiver will be relatively quiet under no signal conditions, but an incoming signal will overcome the squelch action and be heard. Since this control is variable, it can be used to provide varying degrees of sensitivity to incoming signals. As the control is advanced from the extreme counterclockwise position the squelch action is progressively increased and stronger signals are needed to overcome it. To receive extremely weak signals or to disable the squelch circuit, simply turn the control fully counterclockwise.

Channel Selector.

Continuously rotating switch selects any one of 23 channels for transmit and receive operation.

Mic Jack.

Connect the push-to-talk microphone or the optional telephone handset.

Signal Strength/RF Power Meter.

During reception, the built-in meter provides a relative indication of signal strength in "S" units on the upper scale and offers comparison between one incoming signal and another.

During transmit, this will provide an indication of antenna RF power on the lower scale. As you speak, the pointer should "flicker" slightly, indicating that you are modulating the RF carrier.

Operating Procedures

CB Transmitter Operation

IMPORTANT: Do not try to transmit without a citizens two-way antenna connected to the antenna connector on the rear panel.

1. Turn the power on.
2. Turn channel selector to a desired channel.
3. Depress the push-to-talk button on the microphone. Hold the microphone 4 to 6 inches from the mouth. Speak at a normal level. During periods of transmission, the receiver is silenced and reception is therefore impossible. In the same way, your signal can not be heard by another station when he is transmitting, each must take turns.
4. To receive, simply release the microphone push-to-talk button.

SCHEMATIC DIAGRAM OF MODEL 681 HY GAIN 1 MK2

PTBM027AOX

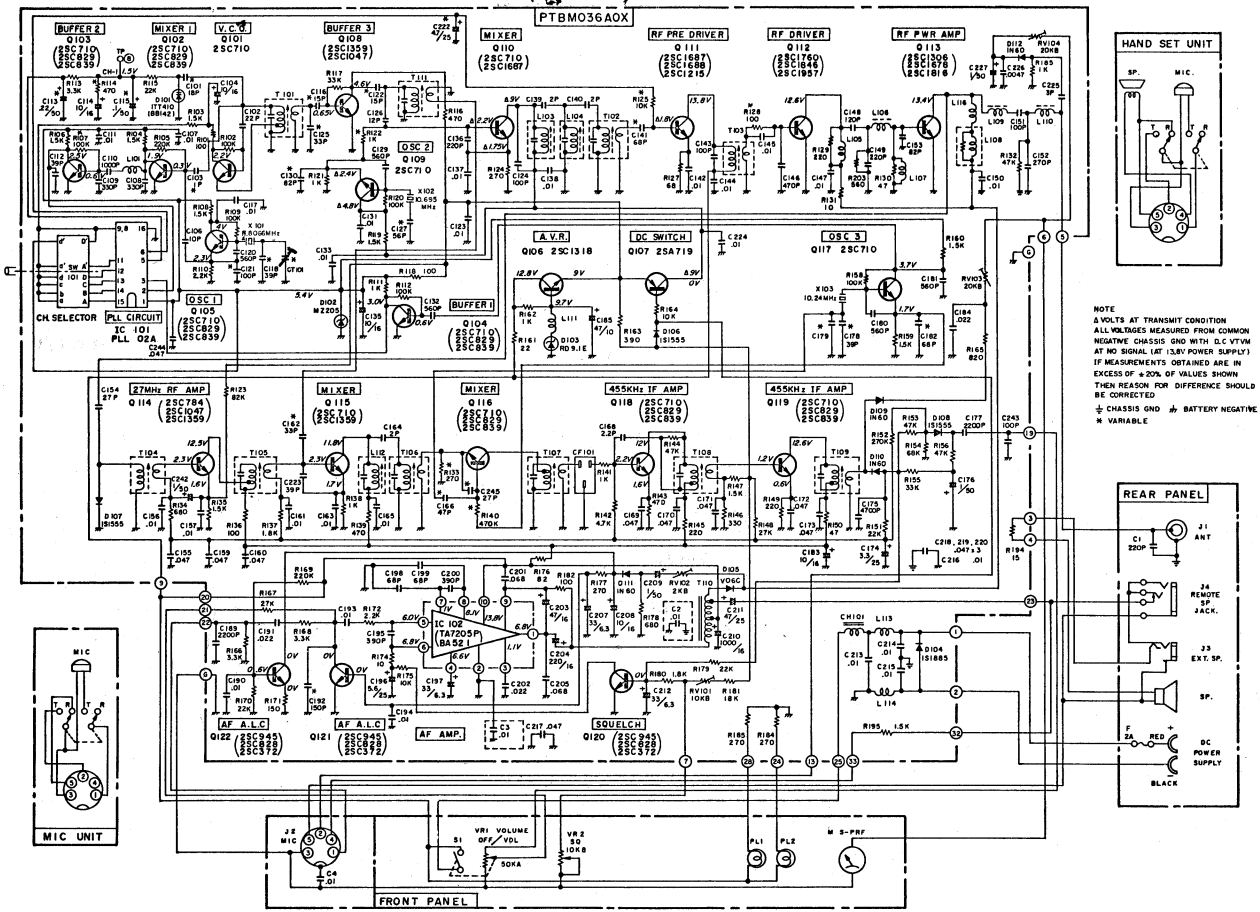

(KT681***XX)H9 Printed in Japan