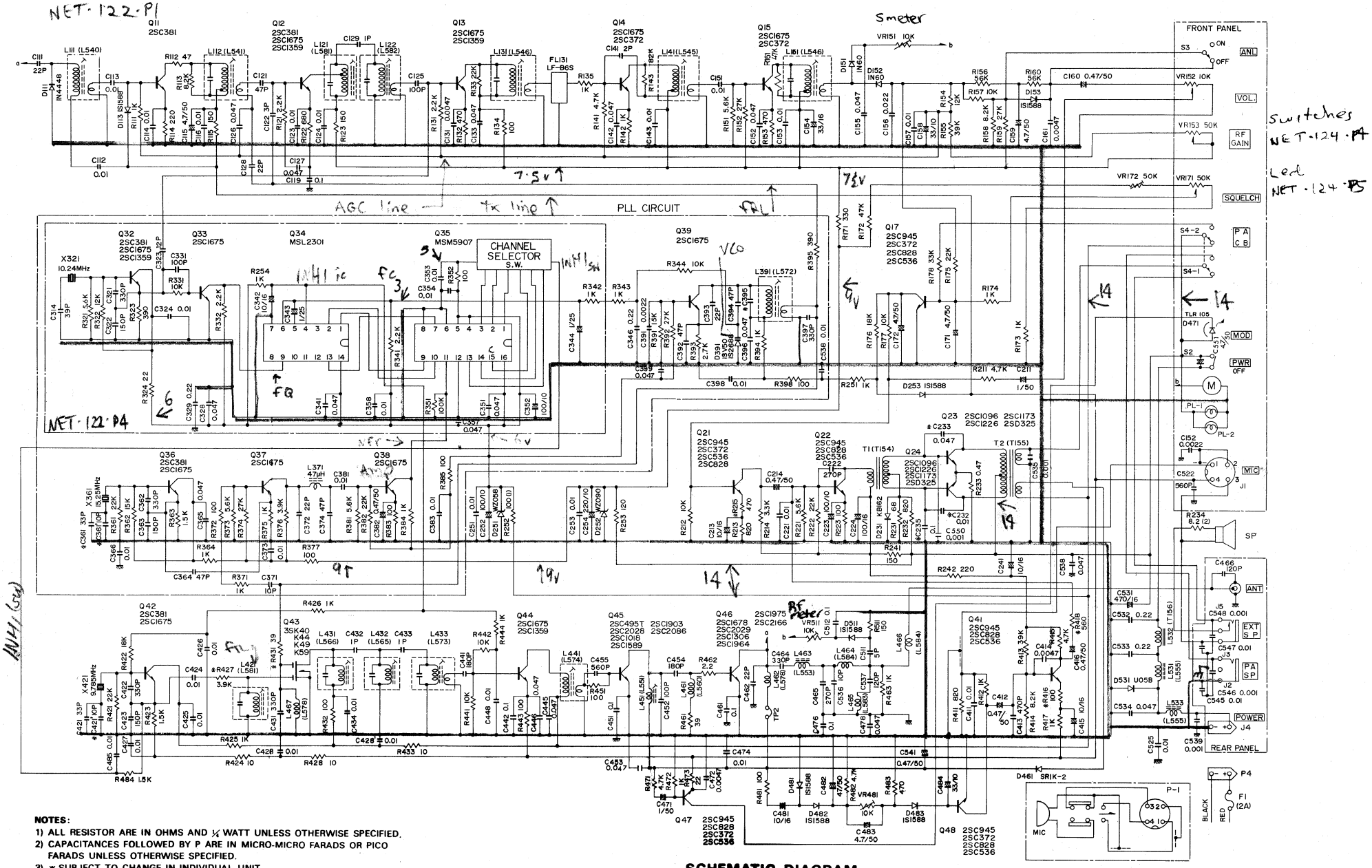

NOTES:

1) ALL RESISTOR ARE IN OHMS AND ¼ WATT UNLESS OTHERWISE SPECIFIED.
2) CAPACITANCES FOLLOWED BY P ARE IN MICRO-MICRO FARADS OR PICO FARADS UNLESS OTHERWISE SPECIFIED.
3) ✱ SUBJECT TO CHANGE IN INDIVIDUAL UNIT.