CμL 9958 DECADE COUNTER

Four flip-flops, a count input amplifier and a reset input are interconnected internally, so 9958 counts from 0 to 9 inclusive in 1-2-4-8 binary coded decimals (BCD). Four outputs are labelled Z_1, Z_2, Z_4 and Z_8. A high level pulse resets the circuit to count 0. It remains at this state until low level voltage starts it counting. 9958 can be preset to any arbitrary number by pulling down the appropriate Z_1, Z_2; Z_3; Z_4 pins. Maximum input is 2MC guaranteed, 4MC typical. Count inputs are to 2.0 MHz. V_{CC} range is 3.3V to 5.5V. Operating temperatures range from 0-75°C. Packages are 14 pin Dual-In-Line. Loading rules are given in our free 9958 data sheets. The 9960 data sheet and APP118/2 show applications typical of counters, DVM's and test equipment. Another use is as a 10:1 frequency divider.

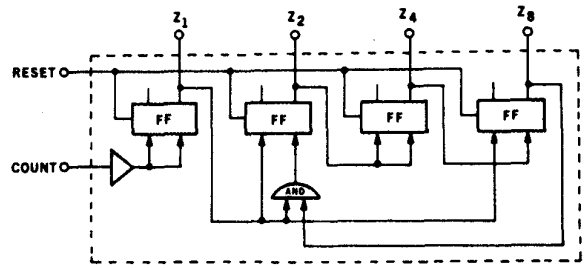

PRICE: 1-24 **$11.20**; 25-99 **$9.00**;
100-999 (SINGLE) **$7.50**; 100-999 (MIXED) **$7.85**.

CμL 9959 4-BIT BUFFER-STORAGE ELEMENT

9959 is a static storage register or a memory device. Information from 9958 is sampled and held in 9959 until new information is entered. So it is a memory circuit consisting of four latch circuits and a common gate driver. When the gate input is high, no information enters and 9959 remains static. When the gate input is low, new information is entered into each latch and transferred to the output. At a greater count frequency than 10 CPS, the 9959 must be used to display the sampled count. It is not required at lower than 10 CPS, or when only the final count need be displayed. Operating temperatures are 0 to 75°C, extendable to 55 to 125°C. V_{CC} range is 3.3V to 5.5V. Package is 16 pin Dual-In-Line. 9959 can also be used in conjunction with RTμL elements. Loading rules are given on the 9959 data sheet — free from Fairchild.

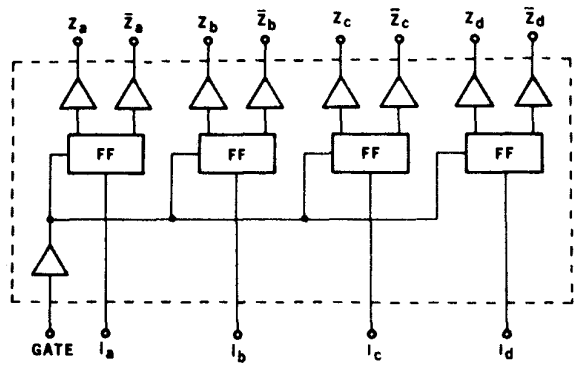

PRICE: 1-24 **$10.05**; 25-99 **$8.00**;
100-999 (SINGLE) **$6.75**; 100-999 (MIXED) **$7.05**.

CμL 9960 DECODER DISPLAY DRIVER

Compatible with 9958 and 9959, 9960 is a monolithic device which decodes BCD into decimal numbers and drives the appropriate cathodes of a gas filled read-out tube (or Nixie). It accepts only 4-line 1-2-4-8 BCD information from binary 0 to binary 9 inclusive. Higher Count (10-15) input causes two outputs to turn on simultaneously. 9960 works at specific voltages, with logic levels also supplied by RTμL devices. To withstand the high voltages of the read-out tube, the 9960 breakdown voltage is 55V min and typically 75V. The 'on' output can pass up 10mA, adequate for even a 'Jumbo' size tube. 9960 is not recommended for use by itself as a decoder. Operating temperatures range from 0-75°C, extendable to −55°C. V_{CC} range is 3.3V to 5.5V. Package is 16 pin Dual-In-Line. Loading rules are given on the free 9960 data sheet.

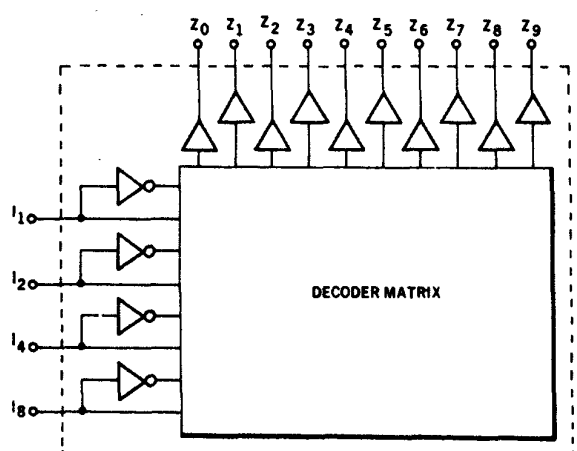

PRICE: 1-24 **$15.70**; 25-99 **$12.55**;
100-999 (SINGLE) **$10.50**; 100-999 (MIXED) **$11.00**.

FAIRCHILD AUSTRALIA PTY. LTD.

The Mostek F8

Our survey of microprocessors continues this month with a detailed look at the Mostek F8 chip set, and the Mostek Evaluation Kit. This comes either as a fully assembled printed circuit board, or as a kit of parts.

by DAVID EDWARDS

The Mostek Corporation is second sourcing the Fairchild F8 microprocessor chip set, which was featured in last month's article. As noted in that article, the F8 microprocessor set is significantly different from other 8 bit designs we have considered. It is manufactured using N-channel Isoplanar MOS technology.

The F8 system is designed primarily for high-volume dedicated-use applications, and does not lend itself quite as readily as some other systems to one-off designs. However, this system can function with only two chips as a complete, fully viable microcomputer system, with 1k bytes of ROM program storage, 64 bytes of RAM, inbuilt clock and programmable timer, and 32 bits of programmable I/O.

The two chips which form the heart of the F8 system are the 3850, designated the CPU or central processing unit, and the 3851, program storage unit or PSU. In terms of chip area the latter device is primarily a mask-programmed ROM, organised as 1k bytes, which stores the program to run the system.

Conventional bus addressing has been avoided by moving all the memory address registers out of the CPU and into the PSU. The extra chip area so gained on the CPU chip has been used to incorporate a 64 byte scratchpad RAM and two bidirectional I/O ports.

On the other hand the mating 3851 PSU device contains a number of things which one doesn't find in a normal ROM, such as a program counter, a stack register, a data counter or indirect memory addressing register, and interrupt control logic. Quite apart from these it also provides two further 8-bit bidirectional I/O ports, and a programmable timer.

Fig. 1 shows how the basic two-chip F8 system is implemented. Fig. 2 shows a more advanced system, which has further features such as direct memory addressing (DMA). This allows peripheral devices, such as data inputs and outputs, direct access to the computer memory. This is achieved without any degradation in system performance, and has the advantage of using fewer machine cycles than would otherwise be the case.

There are only three programmable registers in the F8 CPU chip, apart from the 64-byte scratchpad. The three registers comprise an 8-bit primary accumulator, a 6-bit register used for indirect addressing of the scratchpad (called the ISAR), and a 5-bit status register.

To a certain extent the 64-byte scratchpad acts like a bank of 64 secondary 8-bit accumulators. The first 11 scratchpad bytes are directly addressable via some of the F8 instructions, while the rest are accessible through implied addressing via the ISAR register. However, scratchpad addresses 9-15 inclusive (decimal) are dedicated as buffers for the PSU addressing registers, so these will not usually be available for other purposes.

On the software side, the F8 has a repertoire of some 76 instruction, more than half of which use a single byte. Of the rest only three use 3 bytes, and the remainder 2 bytes. This allows some programs to be surprisingly short.

The F8 designers have achieved this economy by relying fairly heavily on implied addressing, where the data to be used in executing an instruction is not specified either directly or indirectly via an instruction operand, but is simply implied by the type of instruction.

In all there are some 15 accumulator instructions, 12 branch instructions, 8 memory reference instructions, 13 address register instructions (including jump to subroutine and return), 15 scratchpad register instructions, and 13 miscellaneous instructions.

Included in the F8 instruction set are a number of powerful immediate instructions, including ADD, AND, COMPARE (2's complement subtraction), EX-OR, LOAD and OR, together with a "call to subroutine immediate" and a "load data counter immediate". There is also a "short" LOAD immediate instruction, which is only a single byte long, and used to load the accumulator with 4-bit data.

Readers interested in learning more about the F8 chip-set are referred to the previous article in this series, which appeared in the November 1976 issue.

The Mostek F8 Evaluation Kit is available in Australia from Namco Electronics. Like the other evaluation kits we have looked at, it is intended to allow potential users to gain practical experience and undertake simple program development at low cost.

The kit comes well packaged in a strong cardboard box, and comprises a ring binder containing device specifications and programming manuals. The binder also includes the completed circuit board, stapled inside a conductive package. A separate additional programmer's guide is also included.

The PCB, which can be plugged into an edge connector, contains the CPU, PSU and SMI (static memory interface)

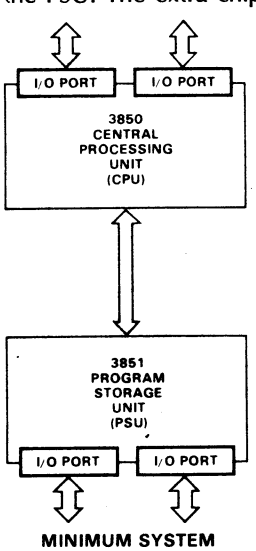

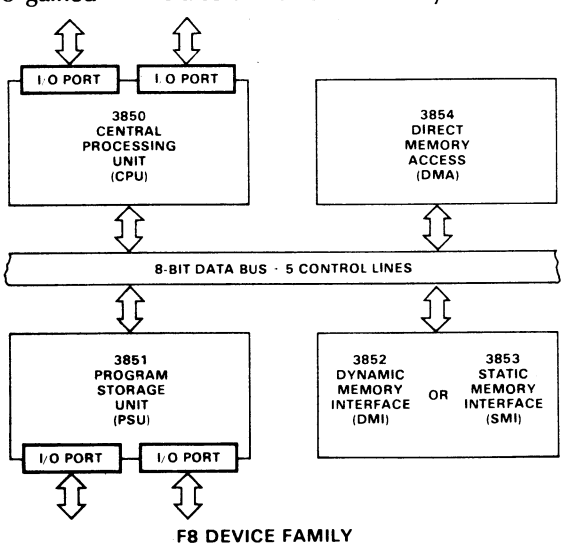

Fig. 1 at left shows a minimal 2-chip F8 system, while Fig. 2 at right shows a more elaborate system with further RAM and DMA facilities.

mos, as well as 1k of RAM, and a full duplex 20mA loop teleprinter interface. A 2MHz crystal is included, so no adjustments are required prior to switch-on. Power requirements are 12VDC at [illegible]mA and 5VDC at 750mA.

The Mostek debug program, called the Designers Development Tool (DDT-1) is resident in the PSU, and occupies the first 1k of memory space. The 1k of RAM appears in the second 1k of memory space, which because of simplified addressing logic also becomes duplicated in the succeeding 1k bytes.

DDT-1 provides basic facilities for development of user programs, as well as routines for teleprinter IOT servicing. DDT-1 allows the operator to insert a breakpoint in his or her program, copy a block of memory into another area, dump memory into and load from paper tape, execute a program starting at any desired memory address, carry out hexadecimal arithmetic, examine and alter memory locations, examine and modify the I/O ports, and to type out a block of memory.

Namco Electronics kindly made available to us a sample evaluation kit, which we were able to "fire up" and try using a Lear Siegler ADM-3 Video Terminal, which was also on hand at the time for review.

DDT-1 proved to be quite easy to use, although, in common with most other simple debug programs, it uses a carriage return as a command terminator. This caused no problems on the video-terminal, but it does tend to cause a teleprinter to consume a large amount of paper. Our only real criticism is that DDT-1 does not seem to be protected against erroneous keyboard entries.

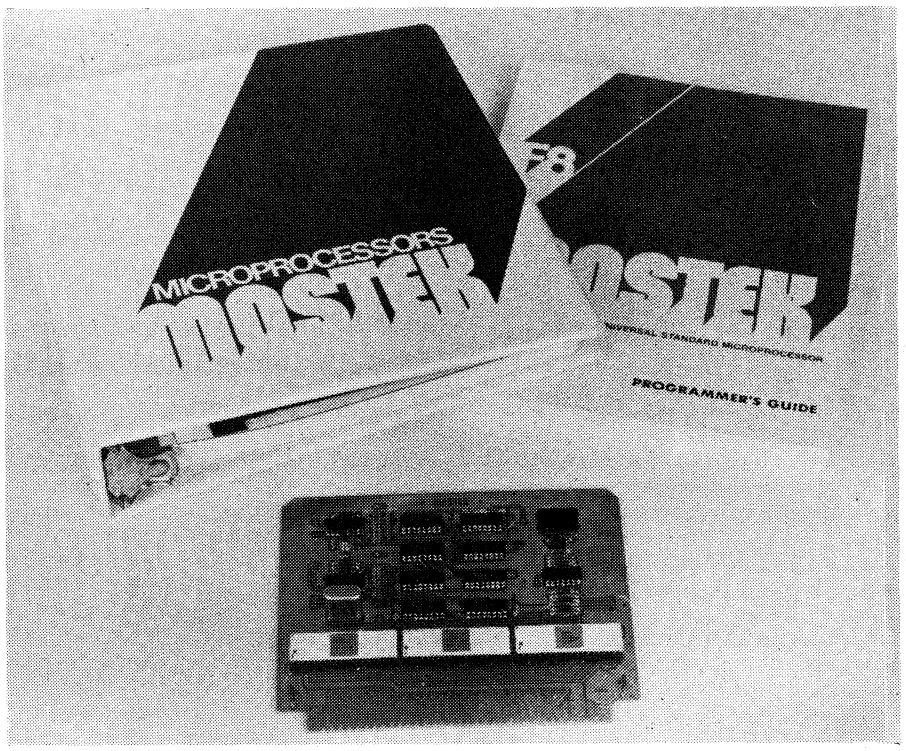

This is the Mostek F8 evaluation kit, comprising PCB, a binder with user manuals, and a programmer's guide. The CPU clock is crystal controlled.

For example, accidental type-in of the letter O instead of a zero when feeding in a hexadecimal address appears to produce unpredictable results. Sometimes part of the user's program can be altered, which can be rather annoying! It would be desirable for DDT-1 to be modified so that it checks for valid hexadecimal characters in the keyboard input, and throws out invalid characters with a query.

Getting to grips with programming proved to be quite straightforward, as Mostek have provided a fully explained sample program. For comparison with other systems, I have written a version of Jim Rowe's "answer-back" program, which is reproduced on these pages.

The first point of interest about this program is the amount of initialization that is required at the start, mainly to use the IOT routines resident in DDT-1. Note also the use of the auto-incrementing ADD BINARY (AM) instruction together with the branch-on-zero (BZ) instruction in the ANSWER loop, to provide exit from the loop at the end without the need for a separate pointer.

Since the DDT-1 teleprinter output routine always responds with a line feed as well as a carriage return when a carriage return is sent, no line feeds are needed in the answer.

Overall, we found the Mostek F8 Kit to be easy to use, and would recommend it to those interested in using the F8 system. It is suitable as either an evaluation system, or as a low cost development tool.

The D.I.Y. kit is available for $248.34 plus tax, while the completely assembled version sells for $300.00 plus tax. Enquiries should be directed to Namco Electronics, 239 Bay Street, North Brighton, Victoria 3186, or to Namco Electronics, 69 Archer Street, Chatswood, NSW 2067.

```
ANSWER-BACK PROGRAM FOR MOSTEK F8 EVALUATION KIT
D. EDWARDS, ELECTRONICS AUSTRALIA 19/10/76

0400 20 FF        INIT,LI   FF          /LOAD AC WITH FF
0402 0B                LR   IS,A        /INITIALIZE ISAR TO 3F
0403 54                LR   4,A         /COPY AC INTO REG 4
0404 34                DS   4           /DECREMENT REG 4 TO FE
0405 56                LR   6,A         /COPY AC INTO REG 6
0406 71                LIS  H'1'        /LOAD AC WITH 01
0407 B6                OUTS 6           /TRANSFER AC TO TIMER PORT TO ENABLE EXT INT
0408 1B                EI               /ENABLE I/O ROUTINES
0409 2[illegible] 03 F3   START,PI   03F3        /CALL TTYIN SUBROUTINE
040C 4C                LR   AS          /COPY  CHAR INTO AC FROM RS
040D 25 0D             CI   'OD'        /COMPARE WITH CR
040F 84 06             BZ   'MESSAGE'   /JUMP TO MESSAGE IF CR
0411 28 03 5D          PI   035D        /SEND CHAR TO TTYOUT SUBROUTINE
0414 90 F4             BR   START       /LOOP BACK TO START
0416 2A 04 23 MESSAGE,DCI   0423        /LOAD DC WITH MESSAGE ADDRESS
0419 70          ANSWER,CLR             /CLEAR AC
041A 88                AM               /ADD CHAR TO AC AND INC DC
041B 84 ED             BZ   START       /LOOP BACK TO START
041D 5C                LR   S,A         /COPY CHAR INTO RS
041E 28 03 5D          PI   035D        /SEND CHAR TO TTYOUT SUBROUTINE
0421 90 F7             BR   ANSWER      /LOOP BACK TO ANSWER
0423 0D 47 4F                           /START OF ANSWER BUFFER
0426 20 41 57
0429 41 59 2C
042C 20 49 27
043F 4D 20 42
0432 55 53 59
0435 21 0D 00                           /ANSWER MUST END WITH A ZERO BYTE
```

Here is the author's version of our "answer-back" program, re-written for the Mostek evaluation kit and the DDT-1 teleprinter subroutines.

9440 MICROFLAME™

16-BIT BIPOLAR MICROPROCESSOR

GENERAL DESCRIPTION — The 9440 MICROFLAME single-chip 16-bit bipolar processor, packaged in a 40-pin DIP, is implemented using Fairchild's Isoplanar Integrated Injection Logic technology (I³L™). Though structurally different from the CPUs of the NOVA line of minicomputers, the 9440 offers comparable performance and executes the same instruction set.

- MICROPROGRAM CONTROL USING PLA
- EIGHT 16-BIT ON-CHIP REGISTERS
- 64 DIRECTLY ADDRESSABLE I/O DEVICES, EACH WITH THREE BIDIRECTIONAL I/O PORTS
- PRIORITY INTERRUPT HANDLING WITH UP TO 16 PRIORITY LEVELS
- FAST DIRECT MEMORY ACCESS AT MEMORY SPEEDS
- 16-BIT 3-STATE BIDIRECTIONAL INFORMATION BUS
- FLEXIBLE OPERATOR CONSOLE CONTROL USING ONLY FOUR LINES
- POWERFUL, WIDELY USED INSTRUCTION SET
- MULTIFUNCTION INSTRUCTIONS FOR EFFICIENT MEMORY USAGE
- FOUR CLASSES OF INSTRUCTIONS; TOTAL OF 2192 DIFFERENT INSTRUCTIONS
- EIGHT ADDRESSING MODES, 32K 16-BIT WORDS (64K BYTES) ADDRESSING RANGE
- 5 V POWER SUPPLY
- TTL INPUTS AND OUTPUTS
- LESS THAN 1 W POWER DISSIPATION
- FULL MILITARY TEMPERATURE RANGE VERSION
- SINGLE-CLOCK STATIC OPERATION, ON-CHIP OSCILLATOR, DC TO 12 MHz CLOCK RATE
- COMPATIBLE HIGH SPEED MEMORIES AVAILABLE (93481/93483)
- TOTAL SOFTWARE WITH FIRE™ SOFTWARE PACKAGE

CONNECTION DIAGRAM
DIP (TOP VIEW)

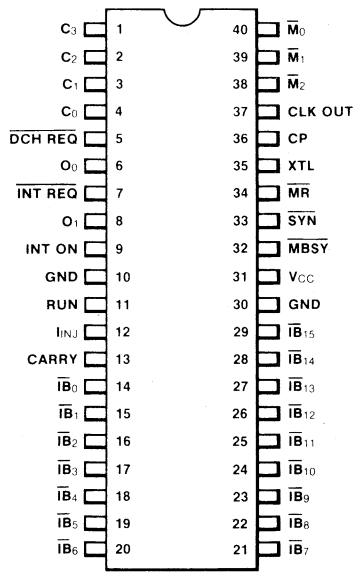

SYSTEM DIAGRAM

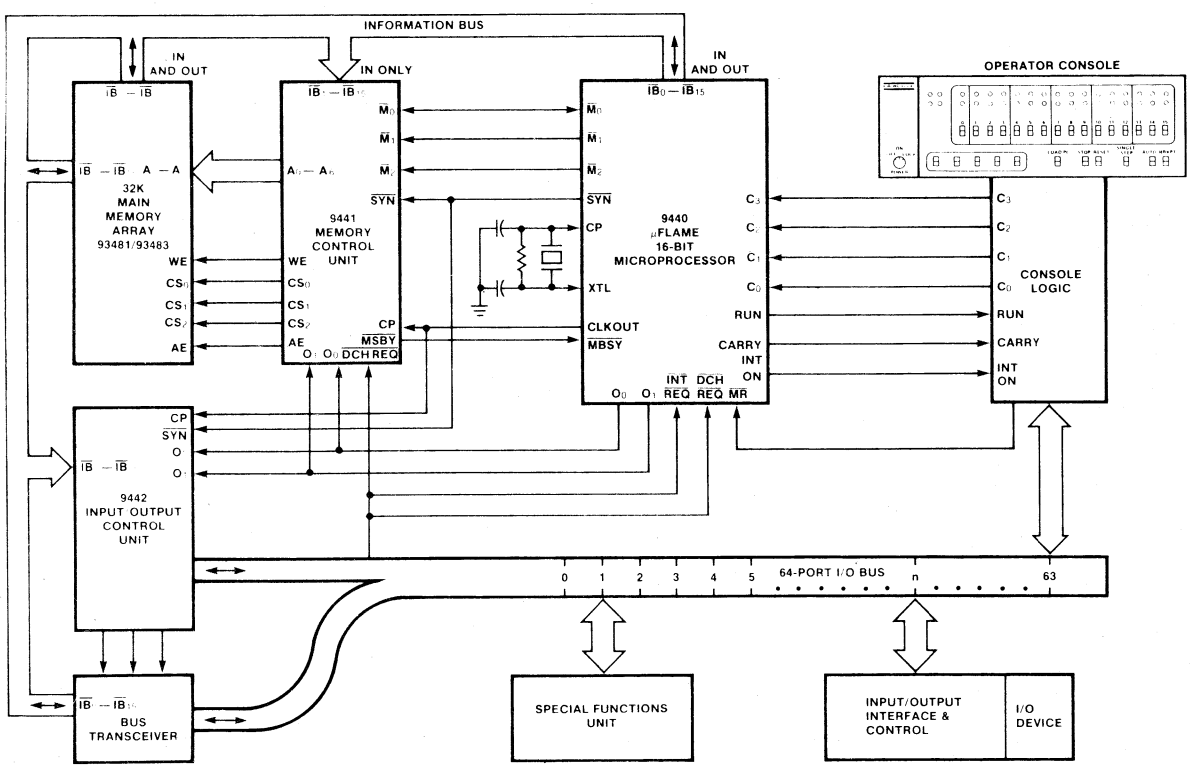

FAIRCHILD

QUICK BE THE FIRST IN YOUR STREET WITH . . . .

THIS INCREDIBLE FAIRCHILD VIDEO ENTERTAINMENT COMPUTER

SPECIAL

Includes a NOUGHTS and CROSSES cartridge valued at $24.50 at NO EXTRA CHARGE.....

Manufactured by FAIRCHILD The US Electronics Giant.

Contains thousands of transistors.

See review in December '78 E.A.

Don't pay $300 or more for others.

This would have to be the most futuristic concept in home entertainment ever devised! Not just another TV video game but a complete computerised home entertainment centre that employs the latest in electronic technology. Just imagine - as new games are devised you simply plug them into the master console for new dimensions of fun and education. The computer console is supplied with two multi-directional hand controllers and has two built-in games (Tennis and Football). For the more adventurous, plug-in any of the 16 fabulous cartridges available separately and listed below (many game cartridges have two games or more!) for hours of colourful fun, learning and skill. Imagine you and your family playing Math games, trying to sink an enemy submarine, shooting the Red Baron out of the sky and even painting - become an electronic artist! The console simply plugs into the aerial socket on your TV and gives all games in glorious colour (if used with a colour TV) plus realistic sound effects from your very own TV set!

$259 **Includes AC adaptor, two built-in games (Tennis and Football) plus a games cartridge with Noughts and Crosses ready to plug in. Cat. X-1200**

SPECIAL 7 DAY TRIAL OFFER

Purchase this Fairchild Channel F Console and 2 game cartridges from one of our stores or by Mail Order. Try it out in your home for 7 days and if not completely satisfied return it to us in the condition you received it and we will refund your money in full.

MAIL ORDERS?

YES! Packing and delivery to anywhere in Australia $5.00. If purchased with the console the cartridges are supplied post FREE - if purchased separately there is a packing and delivery charge of $2.00 per cartridge.

TERMS

To approved applicants we can offer terms on 10% minimum deposit and low monthly repayments. Terms are only available to personal shoppers.

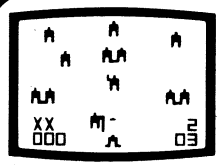

Baseball

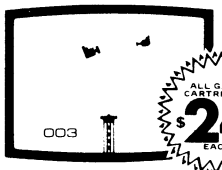

Spitfire

ALL GAMES CARTRIDGES $24.50 EACH

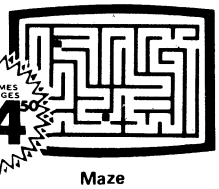

Maze

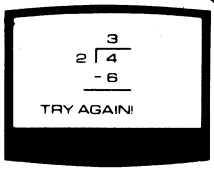

Math Quiz II

BLACKJACK Cat. X-1201
Two games available - you play the TV (the bank) or two players can try and break the bank.

DESERT FOX Cat. X-1203
Two games - Desert Fox where you try and destroy the other tank without being destroyed and Shooting Gallery - the electronic rifle against dead ducks!

MAZE Cat. X-1204
Four great games - Maze, Jailbreak, Blind-man's-bluff, and Trailblazer - games that will test your skill.

BASEBALL Cat. X-1205
All the skills and thrills of the league - for two players.

SPITFIRE Cat. X-1206
Two games - for one player the Red Baron is after you, in the other, two players shoot it out in the sky.

SPACE WAR Cat. X-1207
Laser beams streak towards you - can you outrace and outgun the aliens from outer space.

MATH QUIZ I Cat . X-1208
Addition and subtraction by using your TV screen

MATH QUIZ II Cat. X-1209
Multiplication and division - teach yourself and the kids.

PINBALL CHALLENGE Cat. X-1217
Remove different coloured walls of bricks to become a pinball wizard.

BACKGAMMON Cat. X-1213
All the rules programmed into the cartridge - so no cheating - also has Acey Duecy a variation on Backgammon.

TORPEDO ALLEY Cat. X-1211
Sink as many ships as possible - plus Robot War, try and escape the robots by destroying them in a force field.

SONAR SEARCH Cat. X-1214
Use your ears to try and sink a hidden fleet.

DODGE IT Cat. X-1216
Dodge a varying number of balls to win this game.

MEMORY MATCH Cat. X-1215
Numbers are exposed then disappear try and remember where they are to win this game.

MAGIC NUMBERS Cat. X-1210
Guess the right digits in the right place - race the clock or play for points.

DRAG RACE Cat. X-1212
Don't eat dust, stomp on the accelerator and beat your opponent in a drag race.

DICK SMITH ELECTRONICS

bankcard welcome here

SHOPS OPEN 9AM to 5.30PM - (Saturday 9AM – 12 noon) BRISBANE 1/2 Hour earlier.

ANY TERMS OFFERED ARE TO APPROVED APPLICANTS ONLY

SYDNEY 125 York Street, SYDNEY. Ph. 290-3377
147 Hume Hwy, CHULLORA. Ph. 642-8922
162 Pacific Hwy, GORE HILL. Ph. 439-5311
30 Grose Street, PARRAMATTA. Ph. 683-1133

MELBOURNE 399 Lonsdale Street, MELBOURNE. Ph. 67-9834
656 Bridge Road, RICHMOND. Ph. 42-1614

BRISBANE 166 Logan Road, BURANDA. Ph. 391-6233

ADELAIDE 203 Wright Street, ADELAIDE. Ph. 212-1962

Many lines available from the Dick Smith Electronics Centres at

GRACE BROS ®
Broadway • Bondi • Chatswood • Liverpool Miranda • Mt Druitt • Parramatta • Roselands and Warringah Mall

MAIL ORDERS P.O. Box 747, Crows Nest, N.S.W. 2065. Post and packing extra.

425EA1278

New Products

Fairchild's Video Entertainment System

The Fairchild Channel F Video Entertainment System is the first of a new generation of video games to be released in Australia. It is based around the Fairchild F8 microprocessor system, and features a multiplicity of intriguing games — many of which require a lot of skill. A standard colour TV set is used as the display/playground/battlefield.

The basic unit consists of a black plastic box, about 300 x 320 x 80mm. This contains all of the control circuitry, including the microprocessor, as well as the video generation circuitry. Screen effects can be generated in three colours, and on-screen digital scoring and elapsed time indicators are provided.

This basic unit contains only two games, hockey and tennis. A row of switches along the front of the unit selects the various available options, such as ball speed and time of play. A reset button and power on/off switch are also provided. A certain amount of skill and experience is required to master these two games, which can also be played in practice versions, against the machine.

Two hand controls are provided, enabling one or two player games to be played. Each controller has eight different movements: left, right, back, forward, twist right, twist left, pull up and push down. A fair degree of practice is required in the use of these controllers, before the separate hand actions can be fully mastered. This, of course, adds tremendously to the fun of the games.

The real versatility of the Channel F centre only becomes apparent however, when one of the many Videocart game cartridges is inserted.

These consist of yellow plastic cases, approximately the size of eight-track cartridge cases, containing a small circuit board and appropriately coded ROMs (read only memories). Each cartridge allows at least one extra game to be played, with some cartridges providing up to four games.

The cartridges are inserted into a slot in the front of the main game case, and the appropriate games and/or options selected by means of the front panel switches. The scope and facilities provided by these cartridges are best explained by listing the contents of some of the cartridges.

The first cartridge of interest is the Democart. This explains the operations and uses of the various controls and switches, as well as giving detailed explanations of the operation of the hand controllers. The explanations are referenced to the game of hockey, which can also be played.

Videocart-1 contains four games, Tic-Tac-Toe (noughts and crosses), Shooting gallery, Doodle and Quadradoodle. Tic-Tac-Toe is played against the machine, which always takes second move (this means you can force a win).

Shooting gallery is again a one person game, in which you try to shoot down ducks provided by the machine. Doodle is a game limited only by your imagination. A colourful pattern can be produced on the TV screen, by your movements of the hand controller. In Quadra-doodle the machine takes over from you, and produces colourful random doodles all by itself. It's almost like watching goldfish — fascinating!

Videocart-2 provides two games, Desert Fox, in which two tanks manoeuvre about a battlefield and attempt to shell each other whilst avoiding mines, and another version of Shooting gallery. Videocart-3 provides one and two person games of Blackjack.

Videocart-4 provides one and two person versions of Spitfire. Here the object is to shoot down your opponent's plane before he shoots you. (Some interesting dog fights occurred in our lab. while we tried out this game!) Videocart-5 provides an interesting version of Space War.

Videocarts 6 and 7 provide mathematical quizzes. The machine puts either addition, subtraction, multiplication or division examples on the screen, and you have to work out the correct answers. The player signifies the answers to the machine by appropriate movements of his hand control.

The eighth cartridge provides two number games, Nim and Mind Reader. With Nim, the object is to remove counters from three piles in such a way that the machine or player takes the last counter, and in so doing, wins. With Mind Reader, you have to guess a mystery number generated by the machine.

Cartridge-9 provides a two player "drag race" game. The object here is to

Video Entertainment Centre . . .

beat your opponent to the finishing line, without blowing your motor, going through a red light, or stalling. Realistic gar changes are included in this game.

Videocart-10 provides four maze games. Some of these are quite difficult as the computer does not show you the maze, so you have to find your way through it blind. This game also produced some hilarity in our lab.

Videocart-11 provides two card games, Acey-Ducey and Backgammon. These are both two player games. Videocart-12 provides a baseball game, again for two players.

Other cartridges we were not able to try out provide additional games such as Torpedo Alley, Dodge It, Sonar Search and Robot War. No doubt even more games and quizzes will be made available in the near future.

A VHF modulator is provided for interfacing the game to the colour TV set. A 75 ohm cable is provided for the connection. Either of two channels is selected by a small slide switch accessed on the underside of the case with a small screwdriver.

Our overall reaction to the Channel F video game system was one of enthusiasm. With the number of variations of each game, as well as the sheer number of games, it will obviously be a long while before all the thrill will go away from this game.

The Channel F Video Game and associated cartridges are available from Dick Smith Electronics, who have branches in most states. Recommended retail price of the game centre, which includes one cartridge, a 240V power pack, two hand controllers and the appropriate connecting leads is $269.00. Extra cartridges cost $24.50 each. (D.W.E.)

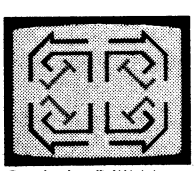

Quadradoodle! Watch your TV draw a kaleidoscope of color!

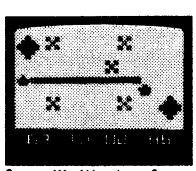

Space War! Your laser fires, but the other flying saucer ducks!

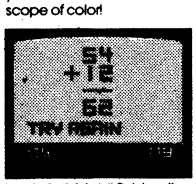

Math Quiz! Add! Subtract! Multiply! Divide! Fun for young players!

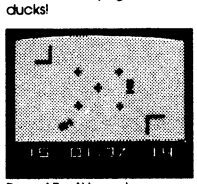

Desert Fox! You advance. The enemy fires, hits — and you're outfoxed!

Examples of the many games available on the Fairchild Video Entertainment System.

FAIRCHILD

F8·3870 DEVELOPMENT SYSTEM

$9500

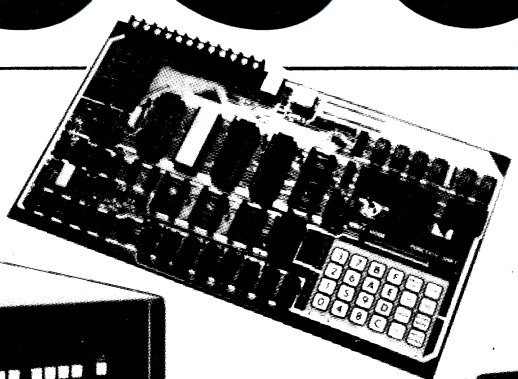

F387X Prototyping, Emulation and Programming (PEP) System—F387XPEP

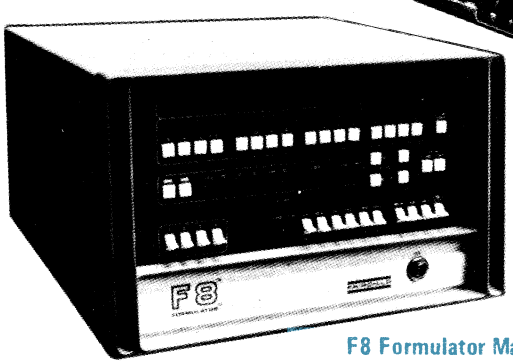

F8 Formulator Mark III — F9508010XX

Video Display Terminal — F895081500

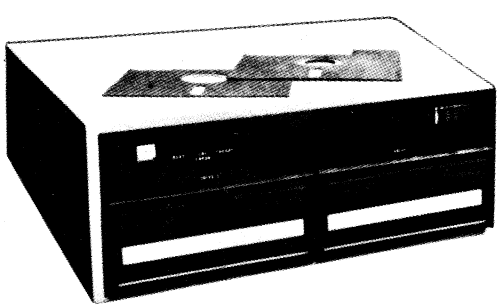

Dual Floppy Disk — F895082026

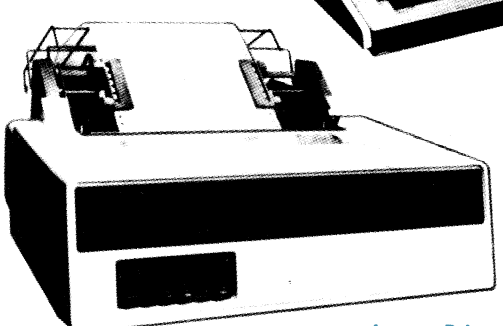

Impact Printer — F895080779

MELBOURNE Telephone 818 0592 **SYDNEY** Telephone 929 6711