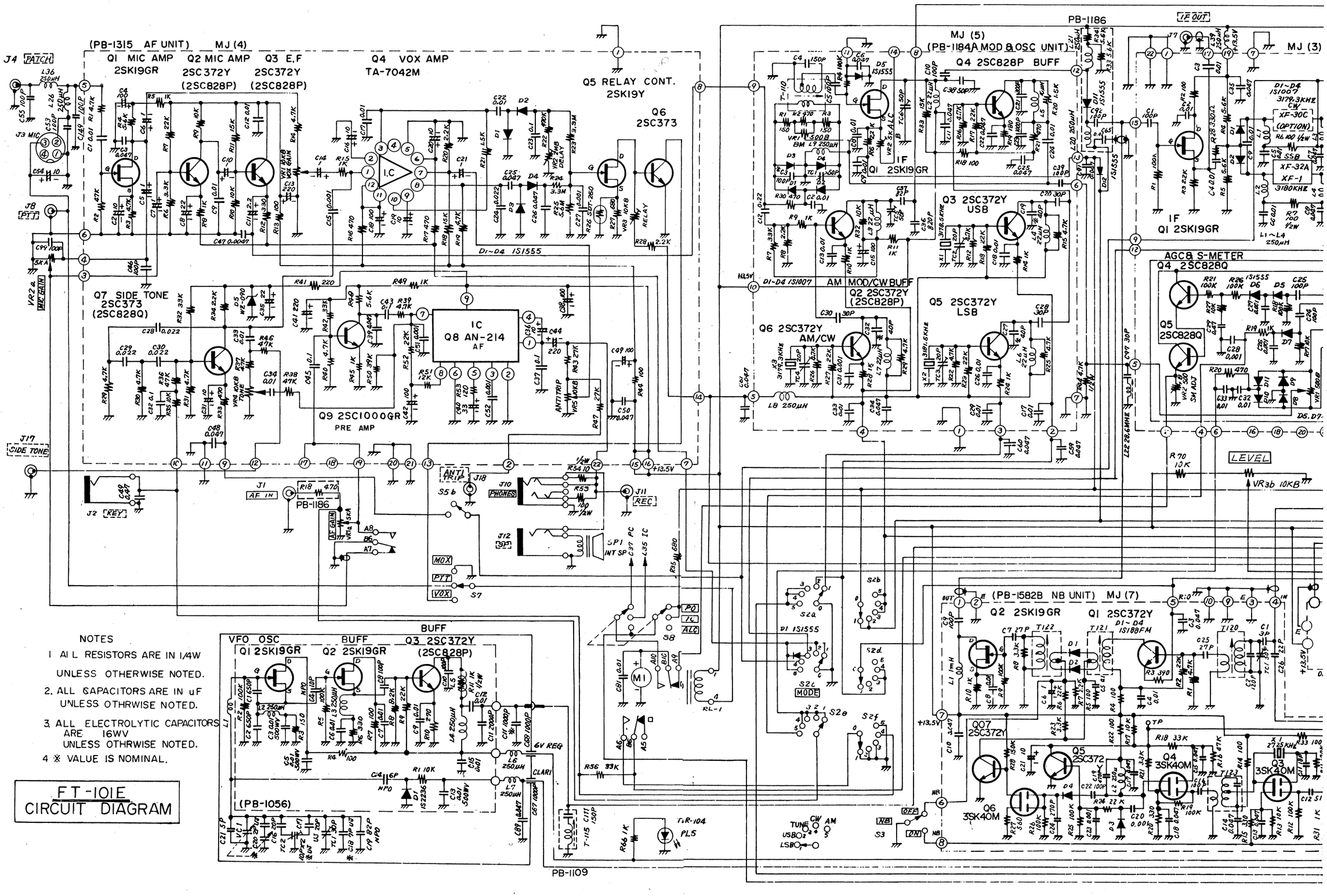

NOTES

1 ALL RESISTORS ARE IN 1/4W UNLESS OTHERWISE NOTED.

2. ALL CAPACITORS ARE IN uF UNLESS OTHRWISE NOTED.

3. ALL ELECTROLYTIC CAPACITORS ARE 16WV UNLESS OTHRWISE NOTED.

4 ※ VALUE IS NOMINAL.

FT-101E CIRCUIT DIAGRAM

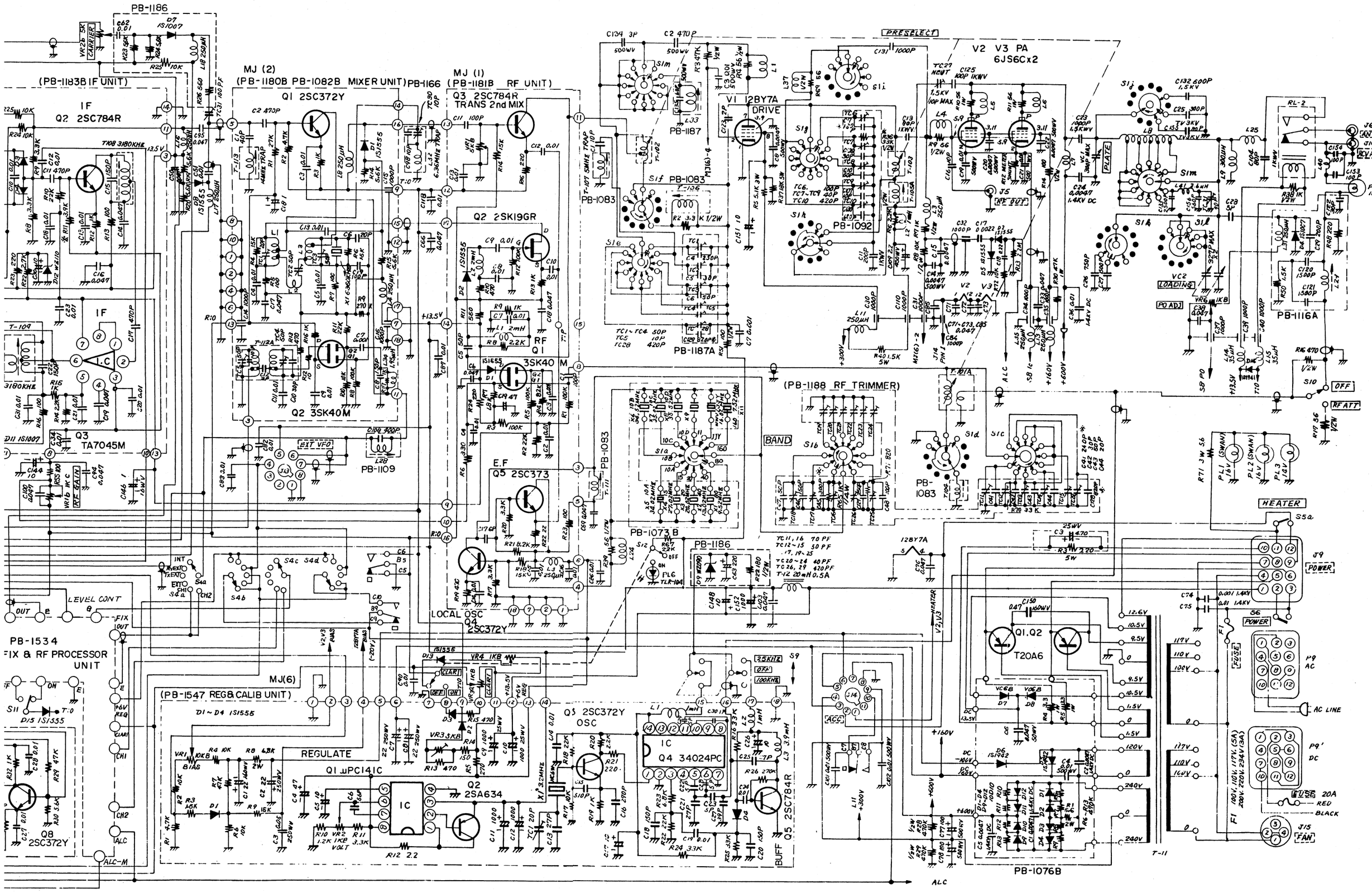
PB-1186
VR2b 5K CARRIER
D7 1S1007
(PB-1183B IF UNIT)
IF
Q2 2SC784R
T108 3180KHZ
T-109
3180KHZ
IF
LC
Q3 TA7045M
D11 1S1007
RF GAIN
VR16 1K C
MJ (2)
(PB-1180B PB-1082B MIXER UNIT)
Q1 2SC372Y
Q2 3SK40M
T-112
T-112A
X1 6360KHZ
PB-1166
EXT VFO
J13
PB-1109
L28
MJ (1)
(PB-1181B RF UNIT)
Q3 2SC784R
TRANS 2nd MIX
Q2 2SK19GR
RF
Q1
3SK40
E.F
Q5 2SC373
LOCAL OSC
Q4
2SC372Y
T-107 5MHz TRAP
PB-1083
PB-1187
T-106
T-102
PB-1073 B
PRESELECT
V1 12BY7A
DRIVE
PB-1092
T-103
T-105A
PB-1187A
TC1~TC4 50P
TC5 10P
TC28 420P
TC6, TC7~TC9, TC10
100P 40P 420P
V2 V3 PA
6JS6Cx2
RF OUT
J5
PLATE
LOADING
PO ADJ
VC1
VC2
RL-2
J6 ANT
J16 RX ANT
PL4 16V
PB-1116A
(PB-1188 RF TRIMMER)
BAND
T-101A
PB-1083
S10
OFF
RF ATT
PL1 (SWAN) 16V
PL2 (SWAN) 16V
PL3 12V
HEATER
S5a
J9
POWER
S6
POWER
PB-1186
S12
PL6 TLR-104
D9 WZ090
TC11, 16 70 PF
TC12~15 50 PF
, 17, 19, 25
TC20~24 40 PF
TC26, 29 420 PF
T-12 20mH 0.5A
12BY7A
S4a S4b S4c S4d
INT
TX EXT
EXT
CH1
CH2
LEVEL CONT
OUT
FIX
PB-1534
FIX & RF PROCESSOR UNIT
S11
ON
D15 1S1555
Q8
2SC372Y
REQ
CLAR
CH1
CH2
ALC
ALC-M
MJ(6)
(PB-1547 REG & CALIB UNIT)
D1~D4 1S1556
REGULATE
Q1 μPC141C
IC
Q2 2SA634
VR2 1KP VOLT
R12 2.2
Q3 2SC372Y
OSC
X1 3.2MHz
IC
Q4 34024PC
Q5 2SC784R
BUFF
25KHZ
OFF
100KHZ
S9
VR4 1KB
CLAR
VR3 3KB
J14
ACC
L11 +300V
+160V
+600V
Q1, Q2
T20A6
D7 D8
D6 1S1942
PB-1076B
T-11
ALC
12.6V
10.5V
9.5V
0
9.5V
10.5V
1.5V
0
1.5V
120V
0
120V
240V
0
240V
117V
110V
100V
117V
110V
100V
F1
FUSE
P9 AC
AC LINE
P9' DC
FUSE 20A
RED
BLACK
F1 100V, 110V, 117V, (5A)
200V, 220V, 234V (3A)
J15 FAN

(7) VFO UNIT (PB-1056)

The VFO module board is installed in the VFO chassis. The VFO uses FET transistors Q1, **2SK19GR** and Q2, **2SK19GR** first buffer. Q3, **2SC372Y** buffer provides isolation and amplification of the VFO signal.

The VFO oscillation frequency is 8700 KHz to 9200 KHz and covers the tunable IF range of 500 KHz. Varactor diode D1, **1S2236** in series with capacitor C14 is switched into the circuit by the clarifier switch and the relay contacts to shift the VFO frequency for receiver offset tuning.

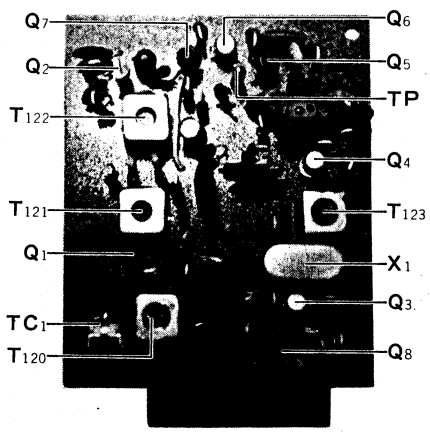

Noise Blanker Module (PB-1582B)

(8) NOISE BLANKER UNIT (PB-1292)

The 3180 KHz signal is fed through T120 to IF amplifier Q1, **2SC372Y**, and then fed through T121, noise blanker gate diode, D1 and D2, **1S188 FM** and T122 to the second IF amplifier Q2, **2SK19GR.**

A portion of the input signal to the Noise E unit is fed through noise amplifier Q8, 2S to a first gate of mixer-oscillator Q3, **3SK40** AGC voltage controls the gain of the noise an Q8, to avoid saturation of Noise Blanker an extremely strong noise, Q3 generates 272 crystal controlled signal which converts 318 signal into 455 KHz. 455 KHz signal is am by a noise amplifier Q4, **3SK40M.** The signal through C20 is rectified by an AGC rectifi **1S188** FM, and the rectified DC volt amplified by Q5, **2SC372Y** in order to cont gain of Q4, **3SK40M.**

C22 is charged by the voltage rectified b **1S188FM**, however, this voltage does not e the conducting voltage of diode D4, so that i not bias the pulse amplifier Q6, **3SK40M** k Q6 in conduct with zero bias, in turn, b controller Q7, **2SC372Y** stays in non-cond state with no noise pulses. As a result, nois diodes D1, D2, **1S188FM** connected in p with Q7 conduct and the signal passes throu diodes.

When noise pulse exists, the voltage acros causes D4 to conduct and Q6 turns into cut turn, Q7 conducts and D1, D2 is biased to preventing the signal passing from the diodes.

(9) CRYSTAL CONTROL/RF PROCESSOR (PB-1534)

This model is located on the VFO unit interconnection of the modules is wired di without using plug-in socket.

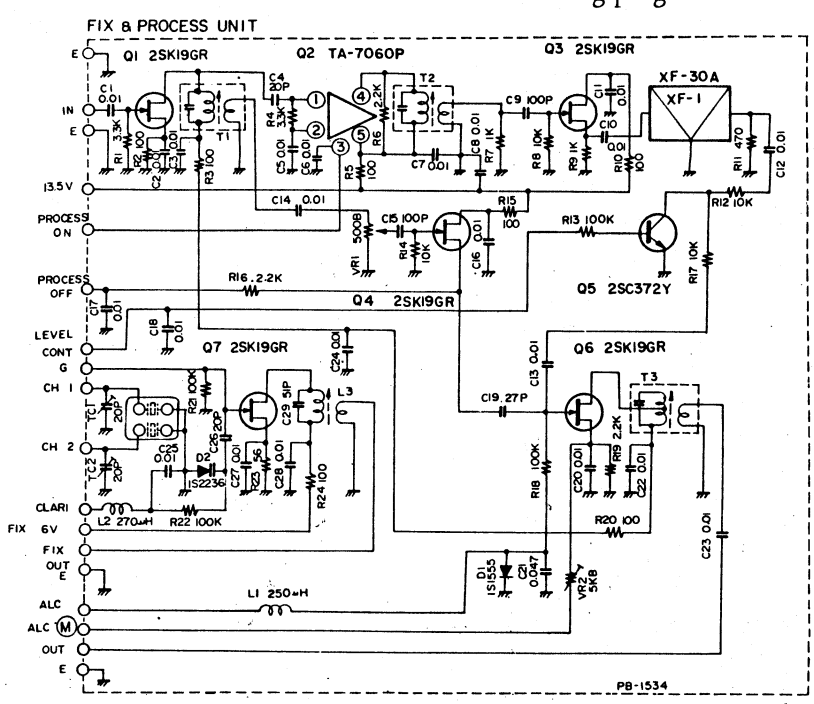

RF Speech Processor/Crystal Control Circuit Diagram (PB-1534)

ALIGNMENT

WARNING

DANGEROUS VOLTAGES ARE PRESENT. USE EXTREME CAUTION WHEN WORKING ON THE TRANSCEIVER WITH COVERS REMOVED. DISCHARGE ALL CAPACITORS BY SHORTING TO GROUND WITH AN INSULATED SCREW DRIVER, ETC.

CAUTION

Never operate the transceiver in the transmit mode without a matched antenna or adequate dummy load. The power amplifier tubes and Pi network components can be damaged if the transceiver is operated without the proper load termination.

GENERAL

The transceiver has been carefully aligned and tested at the factory and, with normal usage, should not require other than the usual attention given to electronic equipment. Service or replacement of a major component may require subsequent realignment, but under no circumstance should realignment be attempted unless the operation of the transceiver is fully understood, the malfunction has been analized and definitely traced to misalignment.

Service work should only be performed by experienced personnel, using the proper test equipment.

Capacitors, resistors, inductors, and transformer adjustments should not be varied more than a few degrees in either direction from their original setting. If the adjustments require varying by an appreciable amount, check for the presence of a defect other than alignment.

EQUIPMENT REQUIRED

(1) RF Signal Generator: Hewlett-Packard Model 606A, or equivalent with one volt output at an impedance of 50 ohms and a frequency coverage to 30MHz.

(2) Vacuum Tube Voltmeter (VTVM): Hewlett-Packard Model 410B, or equivalent VTVM with an RF probe good to 40 MHz.

(3) Dummy Load: Waters Model 334A or equivalent 50 ohms non-reactive load rated at 300 watts average power.

(4) AF Signal Generator: Hewlett-Packard Model 200 AB, or equivalent.

(5) A general coverage receiver covering the frequency range from 3 to 30 MHz with a 100 KHz calibrator.

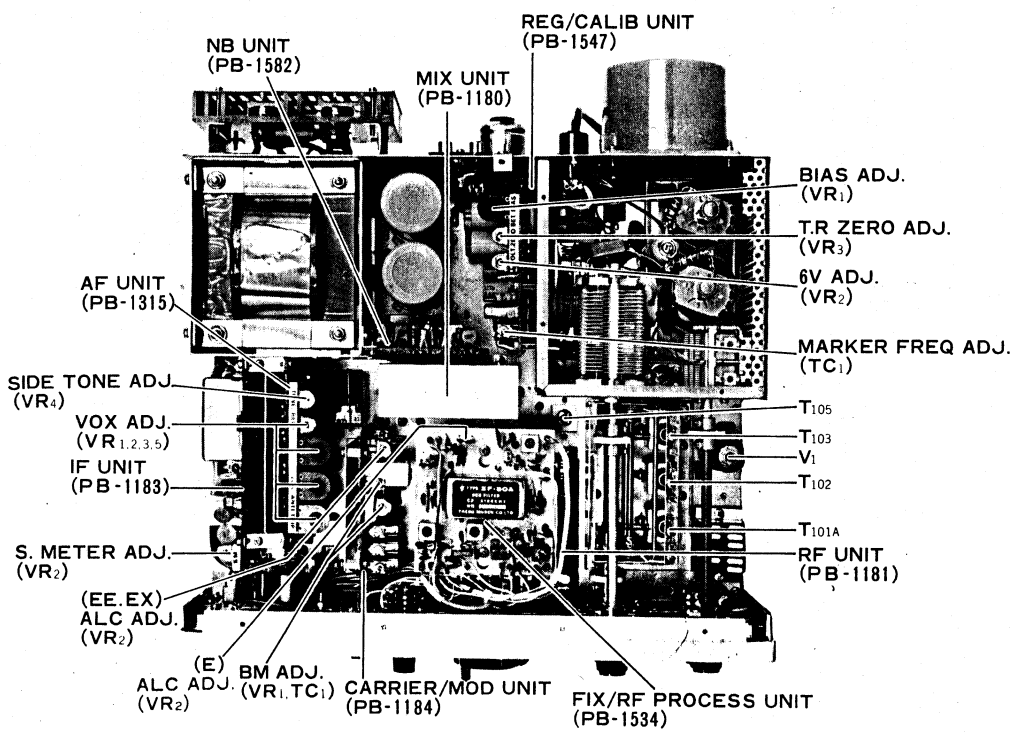

Alignment Points—Top View

1. S-METER SENSITIVITY ADJUSTMENT

Place the transceiver in the receive mode and connect a signal generator to the antenna terminal of the transceiver. Set the signal generator to 14200 KHz with an output of 50 uV.

Tune the transceiver for maximum S-meter reading. The S-meter should read S-9 +25dB. If S-meter adjustment is required, adjust VR2 on PB-1183B to obtain the reading.

When the transceiver is tuned to 14200 KHz the 100 kHz crystal calibrator output will be approximately 50 μV or S-9 +25dB on the S-meter.

2. NOISE BLANKER ADJUSTMENT

Connect a signal generator to the antenna terminal and tune the receiver to the signal.

Peak T120 and TC1 for a maximum S-meter reading.

Connect VTVM between Tp (collector of Q5) and adjust T123 for a minimum VTVM reading.

3. VOX ADJUSTMENT

VOX controls are located on PB1315A These are VR1 VOX Gain, VR2 Delay, VR3 Relay Sensitivity and VR5 Antitrip Gain.

Set the operation switch to the VOX position and turn the AF GAIN and MIC GAIN controls fully counterclockwise. Slowly rotate the RELAY control (VR3) clockwise until the relay activates, then return the control carefully counterclockwise until relay releases. This release point is the proper setting for the RELAY sensitivity control.

Set MIC GAIN control to the center of its travel. Speak into the microphone normally, adjust VOX control VR1 to just activate VOX relay.

Tune in a signal and adjust the AF GAIN control to a comfortable listening level. Set the ANTITRIP control VR5 to the minimum point that will prevent the speaker output from tripping the VOX.

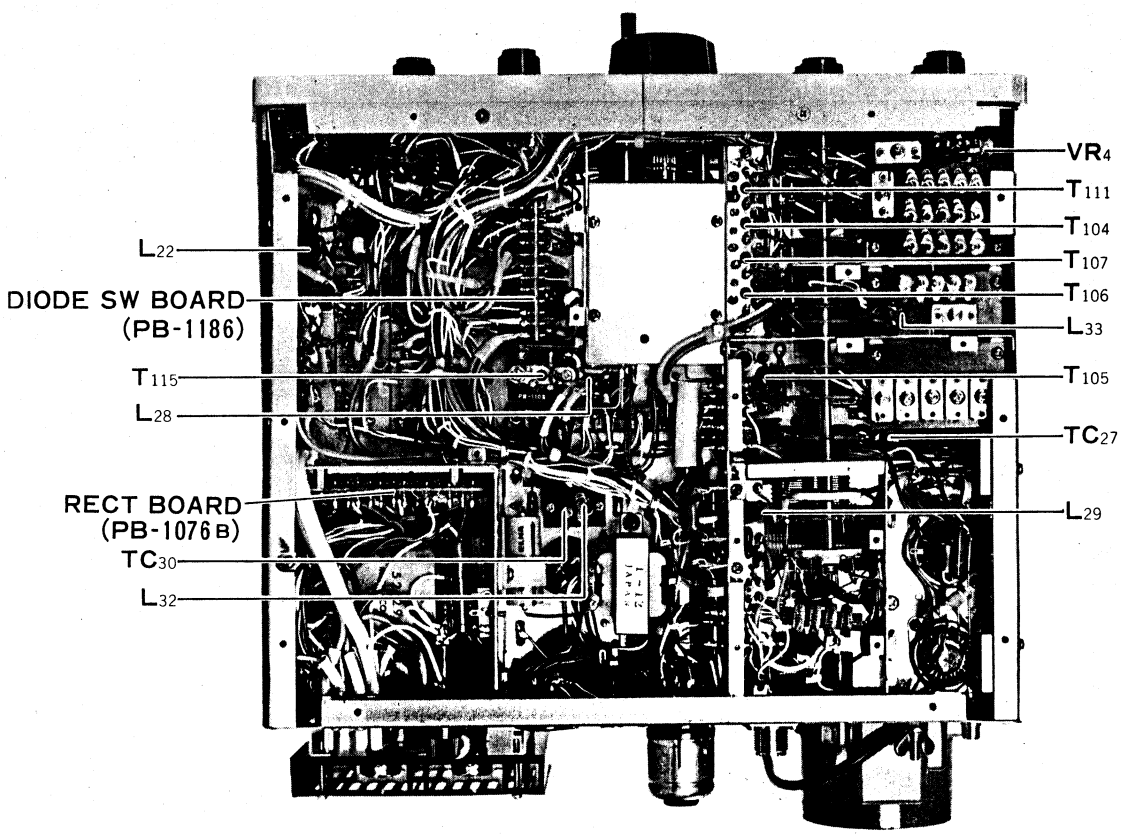

Alignment Points—Bottom View

Adjust the DELAY control VR2 for suitable release time.

4. CW SIDETONE LEVEL ADJUSTMENT

CW sidetone level may be adjusted by rotating TONE-level potentiometer (VR4) located on PB-1315A.

5. CARRIER BALANCE

The transceiver should be allowed to reach operating temperature before making the carrier balance adjustment.

Tune-up the transceiver for SSB operation using an antenna or dummy load. Turn the MIC GAIN control fully counterclockwise to remove all audio from the modulator stage.

With the MODE switch set to either the LSB/USB positions, turn the "FUNCTION SWITCH" to the MOX position and adjust the carrier balance controls (VR1 and TC1) on PB-1184A for minimum PO meter reading.

A more exacting balance may be obtained by tuning a receiver, having an S-meter, to the transmitted frequency. Adjust the balance controls for minimum S-meter reading while switching the MODE switch back and forth between the two sideband positions to obtain good carrier suppression for both sidebands.

6. ALC LEVEL ADJUSTMENT (EE/EX model)

The ALC meter will require adjustment if when the METER switch on the front panel is set to the ALC position, the mode switch to USB, the "FUNCTION SWITCH" to MOX and the microphone gain to zero the ALC meter does not read 5. To adjust the meter, set the controls as follows:

MODE .....USB
MIC GAIN ..... Fully CCW
MOX-PTT-VOX .....MOX

If the meter reads other than .5 on the bottom scale, adjust the ALC control VR2 on PB-1184A for a meter indication of .5. Return the "MOX-PTT-VOX" switch to the PTT position.

For the E model, please refer to the following RF processor adjustment.

7. RF PROCESSOR

Set the controls and switches as follows:

MODE	SSB (either LSB or USB)
HEATER	OFF
METER	ALC
PROCESS	OFF
MIC GAIN	Fully CCW position
BAND	Any Band

Set the operation switch to MOX position and adjust a potentiometer VR2 until the meter indicates exactly full scale without any modulation.

Connect the 1 kHz audio signal generator output of 10 mV to the MIC input. Adjust the MIC GAIN control until the audio input voltage becomes 30 mV at the gate of Q1, 2SK19GR. Peak T1 and T3 for maximum audio output at the output coil of T3. Set the VR1 for 30 mV output at T3.

Set the RF PROCESSOR switch to ON position and peak T2 for a maximum output.

8. VOLTAGE REGULATOR ADJUSTMENT

Connect a VTVM DC probe between pin 13 of MJ 6 (PB-1547) and ground. Adjust VOLT potentiometer VR2 for exactly 6 Volt reading on VTVM.

9. CLARIFIER ADJUSTMENT

The frequencies coincide at CLARIFIER control OFF and 0 position in the receive mode. If not, adjust potentiometer VR3 located near the clarifier control potentiometer under the main chassis.

Transmit and receiver frequencies coincide at CLARIFIER control OFF position. If not, adjust ZERO potentiometer VR3 on PB-1547.

10. BIAS ADJUSTMENT

The final amplifier bias must be checked to insure linearity and normal operating plate dissipation for the final tubes. Adjust the BIAS control VR1 on PB-1547 as follows: Set the transceiver to the receive mode and allow the transceiver to reach operating temperature.

Set MODE switch to USB, METER switch to IC and the "FUNCTION SWITCH" to MOX position for transmit condition. The meter will indicate PA plate current. Idle plate current is 60 mA if the bias

is correct. If the idle plate current is other than 60 mA, adjust the BIAS control for 60 mA.

There is a little difference in the idle current between AC and DC operation. Adjust the idle current to 60 mA for each operation.

11. POWER OUTPUT METER ADJUSTMENT

VR6, located on the transceiver rear panel adjacent to the antenna coax fitting, provides an adjustment for power output indication on the meter.

This potentiometer should be adjusted to indicate 1/2 to 2/3 full scale meter deflection when the transmitter is producing full output power in the tune position.

It should be noted that the meter indicates relative power output and is not the basis for determining actual power output.

VR6 has been preset at the factory to read 1/2 to 2/3 full scale into a 52 ohm dummy load. The operator should not indiscriminately adjust VR6 into an unknown load or an antenna with high VSWR.

12. FINAL AMPLIFIER NEUTRALIZATION

When replacing the final amplifier tubes, it may be necessary to reset the bias to give correct idle current and check neutralization. Using the procedure outline below will guarantee maximum output and long tube life.

CAUTION

HIGH VOLTAGES ARE PRESENT ON UNDERSIDE OF CHASSIS AND INSIDE OF FINAL COMPARTMENT. USE GREAT CARE WHILE MAKING ADJUSTMENTS WITH WIRING EXPOSED.

(1) Connect a dummy load to antenna, and set meter to IC.

(2) Locate TC27 the neutralization variable capacitor shaft on the underside of the chassis near the driver stage band switch wafer, in the final amplifier section.

(3) Check final amplifier idle current in USB or LSB position and adjust as described before.

(4) Tune up the transceiver at 29 MHz, 10B or 10C band with MODE switch at TUNE position, and advance the CARRIER control until meter IC reads 200mA.

(5) Rotate PLATE tuning control and observe dip as indicated on the meter. If the dip is not prominent, reduce the loading control slightly for better indication. As the PLATE control is rotated the meter should rise equally and smoothly on either side of maximum dip indication.

(6) Determine which side of the dip rises abruptly. Set PLATE control slightly to this side of dip keeping the meter reading below 100 mA.

(7) Using nonmetallic tuning wand, rotate neutralization capacitor shaft very slightly in the direction which reduces the current shown on the meter. Repeat steps 6 and 7 until the meter indicates a smooth and equal rise on either side of the maximum dip point.

The final compartment cover must be in place to supply the RF shielding required during the neutralization procedure.

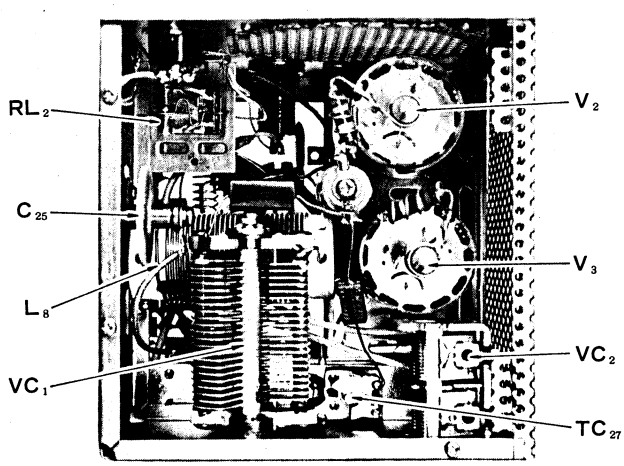

FINAL AMPLIFIER COMPARTMENT

13. ALIGNMENT OF TRANSMITTER MIXER/DRIVER AND RECEIVER FRONT END STAGES

The final amplifier bias adjustment must be set to 60 mA before extensive operation of the transmitter is attempted. It is assumed that the signal generating stages of the transceiver are functioning properly. Use the internally generated signal of the transceiver to align the transmitter mixer and driver stages and the RF signal generator to align the receiver front end stage.

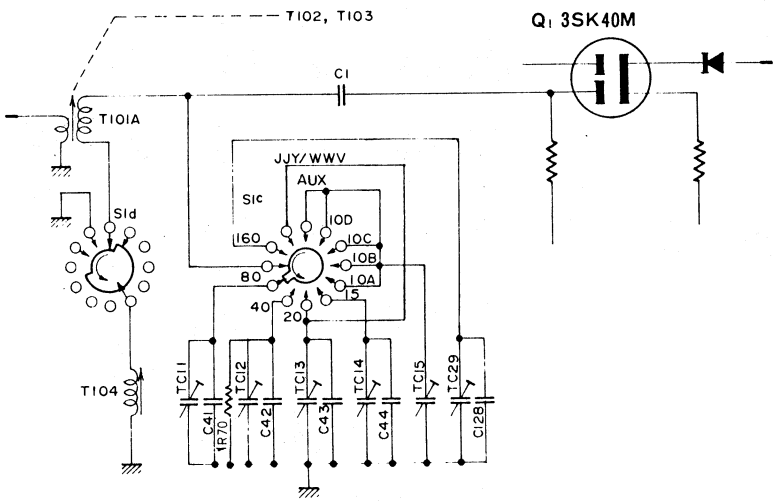

RF INPUT CIRCUIT

BAND	COIL	CAPACITOR		TRIMMER
160	T101A+T104	C128	820 PF	TC29
80		C41	240	TC11
40		C42	30P	TC12
20	T101A	C43	50 PF	TC13
15		C44	20 PF	TC14
10				TC15

(1) Connect the 50-ohm dummy load to the antenna Jack. Tune up the transceiver at 30,000 KHz (BAND 10D, VFO at 30,000 KHz) as follows; Set the BAND switch to 10D, the VFO to 30,000 KHz, PRESELECTOR control to the upper end of 10 meter segment and the OPERATION switch at MOX. Advance the CARRIER control and tune the final amplifier. Maintain the resonant plate current (IC) at 100 mA with the CARRIER control. Set trimmer TC5 to the mid-capactance position and adjust the slugs of T102 and T103 for maximum output into the dummy load. Reduce the transmitter output to zero with the CARRIER control.

(2) Set the OPERATION switch to the receive mode, RF and AF GAIN control to maximum, CLARIFIER control to "OFF", and NOISE BLANKER to "OFF". Do not change the VFO setting and PRESELECTOR control setting set up in step 1. Tune the RF signal generator to 30,000 KHz and adjust it for approximately 1,000 Hz beat note. Use just enough signal generator output (approximately 1 microvolt for an aligned unit) to keep from developing AGC voltage (no S-meter indication). Set trimmer TC15 to the mid capacitance position. Adjust a slug of T-101 for maximum audio output without developing AGC voltage.

(3) Set the BAND switch at 10A, the VFO at 28,000 KHz and the "MOX-PTT-VOX" switch at MOX. Advance the CARRIER control and tune the final amplifier. Maintain the meter reading at 100 mA with the CARRIER control as described in step 1.

Set the PRESELECTOR control to the lower end of 10 meter segment and adjust trimmer TC5 for maximum output at the dummy load. Reduce the transmitter output to zero with the CARRIER control.

(4) Set the OPERATION switch to the receive mode and without changing the VFO or PRESELECTOR control settings, tune the RF signal generator to 28,000 KHz and obtain 1,000 Hz beat note.

BAND	GRID CIRCUIT			PLATE CIRCUIT		
	COIL	CAPACITOR	TRIMMER	COIL	CAPACITOR	TRIMMER
160	T102+T106	C129 820P	TC28	T103+T105	C130 820P	TC10
80		C4 200P	TC1		C9 200P	TC6
40		C5 30P	TC2		C106 30PF	TC7
20	T102	C6 50PF	TC3	T103	C10 50PF	TC8
15			TC4		C107 10PF	TC9
10			TC5			

12BY7A TUNING CHART

Control the signal generator output and adjust trimmer TC15 for maximum audio output as described in step 2.

(5) Repeat step 1, 2, 3 and 4 to peak out the coil adjustments for the 10 meter band.

(6) Set the BAND switch to 15, the VFO to 21,000 KHz and the PRESELECTOR to the lower edge of the 15 meter segment. Tune up the transceiver to 21,000 KHz as described above. Adjust trimmers TC4 and TC9 for maximum transmitter output into the dummy load.

(7) Set the OPERATION switch to the receive mode, and without changing the VFO or PRESELECTOR settings. Tune the RF signal generator to 21,000 KHz and obtain the 1,000 Hz beat note. Adjust trimmer TC14 for maximum audio output as described in step 2.

(8) Repeat the procedures given in step 6 and 7 on the 20 meter band. The trimmer TC3 and TC8 are used for maximum transmitter output and TC13 for maximum audio output in receive.

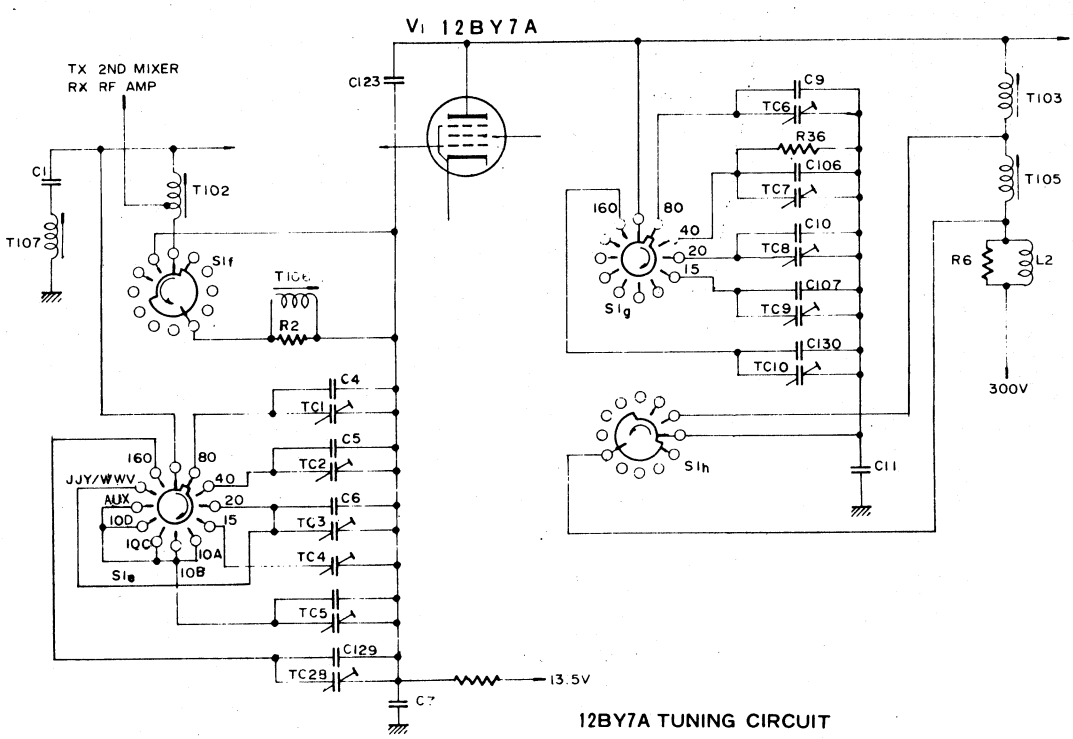

12BY7A TUNING CIRCUIT

(9) Set the BAND switch at 80, VFO at 4,000 KHz, and the PRESELECTOR at 7 of the inner scale Set TC1 and TC6 at the mid-capacitance point. Tune the transceiver to 4,000 KHz and adjust T105 and T106 for maximum transmitter power output into the load.

(10) Set the OPERATION switch to the receive mode, and without changing the VFO or PRESELECTOR settings, tune the RF signal generator to 4,000 KHz and obtain a 1,000 Hz beat note. Set TC11 to the mid-capacitance point. Adjust T104 for maximum audio output as described in step 2.

(11) Set the PRESELECTOR at the lower edge of the 80 meter segment, VFO at 3,500 KHz, and adjust TC1 and TC6 for maximum transmitter power output into the dummy load.

(12) Set the OPERATION switch to the receive mode, and without changing the VFO or PRESELECTO settings, tune the RF signal generator to 3,50 KHz and obtain a 1,000 Hz beat note. Adjust TC1 for maximum audio output as described in step 2

(13) Repeat step 9, 10, 11, and 12 to peak out the co adjustments for 80 meter bands.

(14) Set the BAND switch to 40, VFO at 7,000 KH and the PRESELECTOR to the lower edge of th 40 meter segment. Adjust TC2 and TC7 for maximum transmitter power output into the dummy load.

(15) Set the VFO at 7,150 KHz and PRESELECTOR for maximum power output. Adjust L33 for maximun power output into the dummy load.

(16) Set the OPERATION switch to the receive mode, and set the VFO or PRESELECTOR settings to the same position as step 14, tune the RF signal generator to 7,000 KHz and obtain a 1,000 Hz beat note. Adjust TC12 for maximum audio output.

(17) Set the BAND switch to 160, VFO at 1,900 KHz and the PRESELECTOR at 2 of the inner scale. Adjust TC28 and TC10 for maximum power output into the dummy load.

(18) Turn the OPERATION switch to the receive mode, and leave the VFO and PRESELECTOR settings unchanged. Apply the RF signal generator output at 1,900 KHz to antenna terminal. Adjust TC29 for maximum S-meter reading.

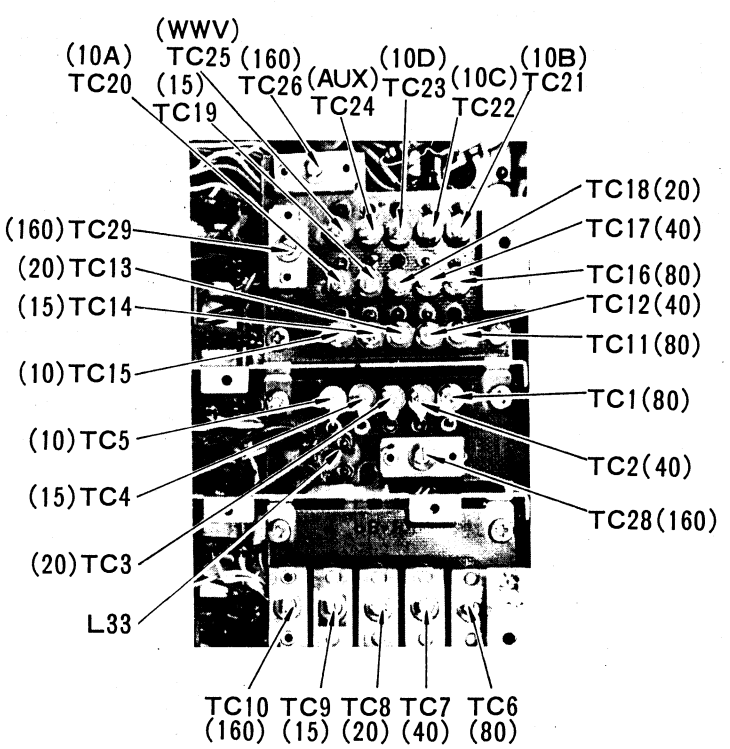

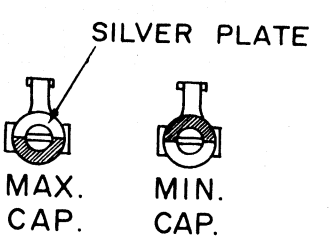

14. HETERODYNE CRYSTAL OSCILLATOR ALIGNMENT

The heterodyne crystal oscillation injection may be checked in the following manner. Connect the VTVM RF probe to the local oscillator test point. Injection is normal if the injection voltage measures 0.3 Volt RMS on all bands.

If not, alignment is required. Set the BAND switch at 10D, TC23 at 1/3 capacitance position, and adjust T111 for 0.3 Volt RMS reading on VTVM. Then adjust TC23, TC22, TC21,....., TC16 and TC26 for each of the band to read 0.3 Volt RMS on VTVM.

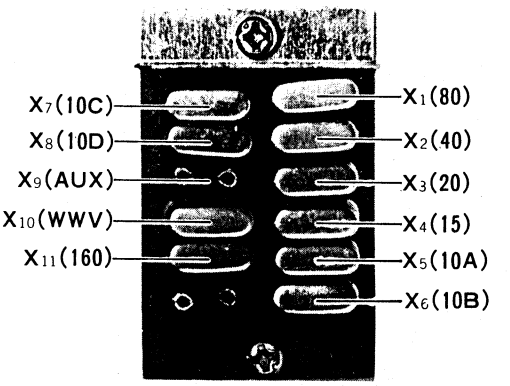

BAND	No.	TUNING CAPACITOR		CRYSTAL FREQUENCY
160	X11	C127 250PF	TC26	7.52MHz
80	X 1	C45 300PF	TC16	9.52MHz
40	X 2	C46 150PF	TC17	13.02MHz
20	X 3	C47 50PF	TC18	20.02MHz
15	X 4		TC19	27.02MHz
10A	X 5		TC20	34.02MHz
10B	X 6		TC21	34.52MHz
10C	X 7		TC22	35.02MHz
10D	X 8		TC23	35.52MHz
AUX	X 9		TC24	
WWV	X10	C48 100PF	TC25	16.02MHz

LOCAL OSCILLATOR TUNING CHART

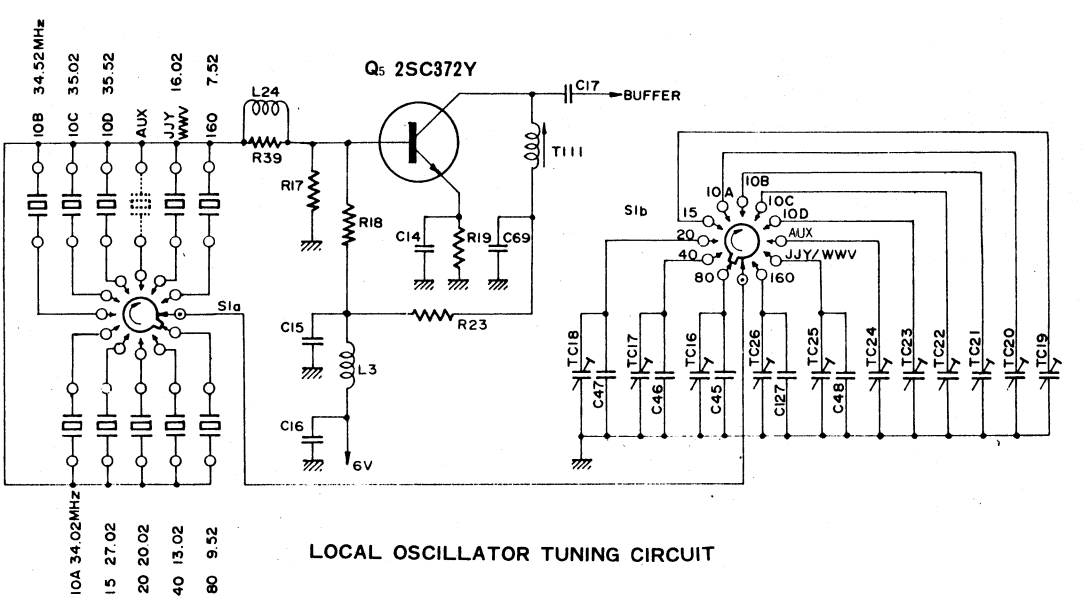

LOCAL OSCILLATOR TUNING CIRCUIT

15. TRAP COIL ALIGNMENT

(1) T107 is used to eliminate the direct-feed-through interference at the IF frequency, and tuned to 5,720 KHz. Set the transceiver at 7,300 KHz LSB in receive mode and peak the PRESELECTOR for maximum noise output. Set the RF signal generator to 5,720 KHz and increase the signal generator output until an audio beat note is heard. Adjust T107 for minimum audio output.

(2) L29 on the printed circuit board located near the antenna change-over relay RL2 is also used to eliminate the direct- feed-through interference. Set the transceiver at 7,080 KHz in the receive mode. Tune the RF signal generator to 5,940 KHz. Adjust L29 for minimum S-meter reading.

3) L22 eliminates the interference by 9th harmonic of the carrier oscillator. Tune the transceiver to 28,600 KHz USB in the receive mode, and increase RF and AF gain control until an audio beat note is heard. Adjust L22 for minimum audio output.

CAUTION

Continuous full output for more than 10 seconds may result in destruction of final tube.

(4) T113 in the high frequency IF unit is used to eliminated spurious radiation on the 20 meter band. For alignment, tune transceiver to maximum output at 14,350 KHz in the tune postion. Measure the spurious radiation, by using the S-meter of another receiver tuned to 14,520 KHz where a spurious radiation can be heard. Adjust T113 for minimum S-meter reading wihout decreasing the power output of the transceiver.

(5) T115 is located on the printed circuit board near the VFO unit and is used to suppress carrier oscillator feed-through . Tune the transceiver to any frequency and load it to full output. Reduce the microphone gain to zero and place the mode switch in the USB position. Adjust T115 for minimum S-meter reading on the receiver.

(6) L28 is used to eliminate spurious radiation on the 15 meter band. Tune the transceiver to maximum output at 21,200 KHz in the tune position. Locate the spurious radiation at 21,220 KHz by another receiver. Adjust L28 for minimum S-meter reading on the receiver.

(7) TC30 connected in series with L32 on the printed circuit board located on the main chassis near the relay RL1 is used to eliminate spurious radiation on 10 meter band. For alignment, tune transceiver to maximum output at 28,500 KHz in the tune position. Measure the spurious radiation by using the S-meter of another receiver tuned to 28,160 KHz where the spurious signal can be heard. Adjust TC30 for minimum S-meter reading without decreasing the power output of the transceiver.