Owners Guide and Installation Instructions

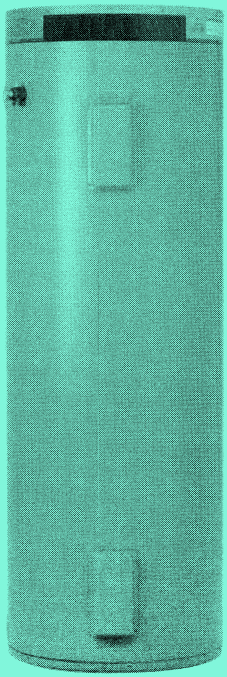

Electric Domestic Water Heater

VULCAN

This water heater must be installed and serviced by an authorised person.
Please leave this guide with the householder.

Notice to Victorian Customers from the Victorian Plumbing Industry Commission.

This water heater must be installed by a licensed person as required by the Victorian Building Act 1993.

Only a licensed person will give you a Compliance Certificate, showing that the work complies with all the relevant standards. Only a licensed person will have insurance protecting their workmanship for 6 years. Make sure you use a licensed person to install this water heater and ask for your Compliance Certificate.

PATENTS

This water heater may be protected by one or more patents or registered designs.

CONTENTS

HOUSEHOLDER - We recommend you read pages 4 to 13.
The other pages are intended for the installer but may be of interest.

ABOUT YOUR WATER HEATER

MODEL TYPE

Congratulations for choosing a Vulcan® water heater. Models are available with either a single heating unit or with twin heating units (refer to "Single Element Model" on page 7 and "Twin Element Model" on page 8).

HOW HOT SHOULD THE WATER BE?

The water heater features an adjustable thermostat, which allows you to choose the most suitable temperature for your hot water needs. Refer to "Temperature Adjustment" on page 4.

To meet the requirements of the National Plumbing Standard the temperature of the stored water must not be below 60°C.

If this water heater is installed as part of a solar water heating system, we recommend the thermostat is set at 60°C to maximise solar contribution.

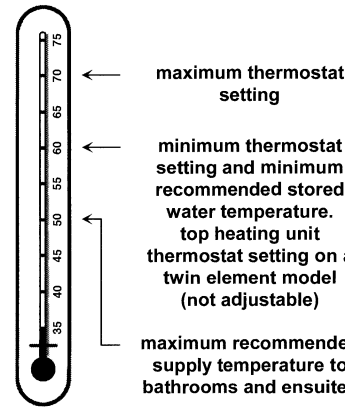

HOTTER WATER INCREASES THE RISK OF SCALD INJURY.

This water heater can deliver water at temperatures which can cause scalding. Check the water temperature before use, such as when entering a shower or filling a bath or basin, to ensure it is suitable for the application and will not cause scald injury.

We recommend and it may also be required by regulations that an approved temperature limiting device be fitted into the hot water pipe work to the bathroom and ensuite when this water heater is installed. This will keep the water temperature below 50°C at the bathroom and ensuite. The risk of scald injury will be reduced and still allow hotter water to the kitchen and laundry.

TEMPERATURE ADJUSTMENT

The water heater features a tradesperson adjustable thermostat, which allows you to select the most suitable temperature for your hot water needs. This requires a licensed tradesperson to make any temperature adjustments. The thermostat has a maximum temperature setting of 70°C and a minimum temperature setting of 60°C.

We advise you have your electrician adjust the thermostat to the lowest temperature setting that meets your needs, especially if there are young children or elderly people in your home. Refer to "Hotter Water Increases the Risk of Scald Injury" on page 4.

ABOUT YOUR WATER HEATER

⚠ WARNING

This water heater is only intended to be operated by persons who have the experience or the knowledge and the capabilities to do so. This water heater is not intended to be operated by persons with reduced physical, sensory or mental capabilities i.e. the infirm, or by children. Children should be supervised to ensure they do not interfere with the water heater.

This water heater uses 240 V AC power for the electrically operated components. The removal of the front cover(s) will expose 240 V wiring. It must only be removed by an authorised or qualified person.

A water heater fitted with a power supply cord and plug, must be plugged into a weatherproof electrical outlet if installed outdoors. Take care not to touch the power plug with wet hands.

SAFETY

This water heater is supplied with a thermostat, an over-temperature cut-out, and a combination temperature pressure relief valve. These devices must not be tampered with or removed. The water heater must not be operated unless each of these devices is fitted and is in working order.

If the power supply cord, plug or electrical conduit to the water heater is damaged, it must be replaced by an authorised person in order to avoid a hazard. The power supply cord and plug must be replaced with a genuine replacement part available from Rheem. Phone your nearest Rheem Service Department or Accredited Service Agent to arrange for an inspection.

The warranty can become void if relief valves or other safety devices are tampered with or if the installation is not in accordance with these instructions.

TO TURN OFF THE WATER HEATER

If you plan to be away from home for only a few nights, we suggest you leave the water heater switched on.

If it is necessary to turn off the water heater:

- Switch off the electrical supply at the isolating switch to the water heater.
- Unplug the power supply cord from the power outlet (power supply cord model only).
- Close the cold water isolation valve at the inlet to the water heater.

ABOUT YOUR WATER HEATER

TO TURN ON THE WATER HEATER

- Open the cold water isolation valve fully on the cold water line to the water heater.
- Plug in the power supply cord at the power outlet (power supply cord model only).
- Switch on the electrical supply at the isolating switch to the water heater.

HOW DO I KNOW IF THE WATER HEATER IS INSTALLED CORRECTLY?

Installation requirements are shown on pages 14 to 20. The water heater must be installed by an authorised person and the installation must comply with National Standards AS/NZS 3500.4, AS/NZS 3000 and all local codes and regulatory authority requirements. In New Zealand the installation must conform with the New Zealand Building Code.

DOES THE WATER QUALITY AFFECT THE WATER HEATER?

The water heater is suitable for most public water supplies, however some water qualities may have detrimental effects on the cylinder and fittings. **If you are in a known harsh water area you must read page 30**. If you are not sure, have your water quality checked against the conditions described on page 30.

HOW LONG WILL THE WATER HEATER LAST?

There are a number of factors that will affect the length of service the water heater will provide. These include the water quality, the water pressure, the water temperature (inlet and outlet) and the water usage pattern. However, your Vulcan water heater is supported by a comprehensive warranty (refer to page 32).

ANODE PROTECTION

The anode(s) installed in your water heater will slowly dissipate whilst protecting the cylinder. The life of the water heater cylinder may be extended by arranging for an authorised person to inspect the anode(s) and replace if required.

The suggested time after installation when the anode(s) should be inspected is 8 years.

For softened water supplies or in areas of poor water quality, it is recommended the anode(s) be inspected 3 years earlier than shown (refer to "Water Supplies" on page 30).

HOW YOUR WATER HEATER WORKS

Water is stored in a vitreous enamel lined steel cylinder and heated by the electric immersion heating unit. The thermostat controls the temperature. Automatic safety controls are fitted to the water heater to provide safe and efficient operation.

MAINS PRESSURE

The water heater is designed to operate at mains pressure by connecting directly to the mains water supply. If the mains supply pressure in your area exceeds that shown on page 15, a pressure limiting valve must be fitted. The supply pressure should be greater than 350 kPa for true mains pressure operation to be achieved.

THERMOSTAT

The thermostat automatically controls the electricity supply to the heating unit so a constant temperature is maintained. The thermostat and its protective over temperature cut out is mounted inside the front cover of the water heater. There is no need to switch the water heater off when it is not in use, except when you are on an extended holiday. The thermostat is fully automatic and power is only used when heating is required.

SINGLE ELEMENT MODEL

This type of water heater has one heating unit with its own thermostat. The heating unit is at the base of the water heater.

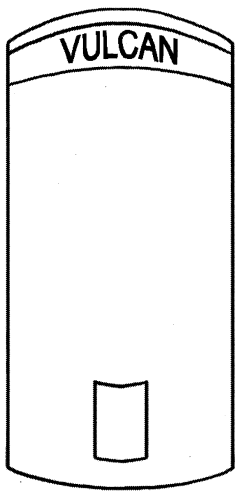

- **Continuous electricity supply**
  This type of connection is suited to where the storage capacity is less than the normal daily usage.

- **Off-Peak electricity supply**
  This type of connection will only allow heating to occur during set hours. A volume of water sufficient for the day's total use is heated and stored. This type of heating will be more economical due to reduced tariffs by the electricity authority.

HOW YOUR WATER HEATER WORKS

TWIN ELEMENT MODEL

This type of water heater has two heating units, each with its own thermostat. One heating unit is at the base of the water heater and the other near the top.

- **Bottom heating unit**
  During normal operation this heating unit supplies all the hot water.

- **Top heating unit (Booster)**
  This heating unit only operates during periods of high demand to provide an additional supply of heated water.

- **Electrical connection**
  The two heating units are wired for non-simultaneous operation, so that only one heating unit can operate at a time. The bottom heating unit is usually connected to an Off-Peak (overnight) or time controlled electricity supply and the top heating unit to a continuous supply. Some electricity suppliers allow both heating units to be metered at the Off-Peak or controlled tariff.

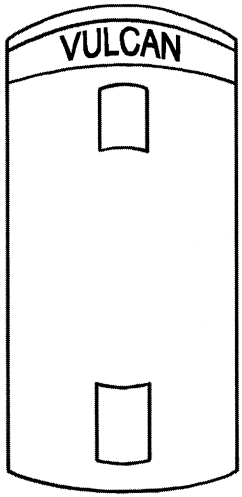

NOTE: Power must be available to the top heating unit circuit at all times for this water heater to operate as designed.

GOING ON HOLIDAY?

If you plan to be away from home for one or two nights, we suggest you leave the water heater switched on. However, if you plan to stay away more than a few nights, conserve energy by switching the water heater off at either the switchboard or isolating switch.

REGULAR CARE

TEMPERATURE PRESSURE RELIEF VALVE

This valve is near the top of the water heater and is essential for its safe operation. It is possible for the valve to release a little water through the drain line during each heating period. This occurs as the water is heated and expands by approximately 1/50 of its volume.

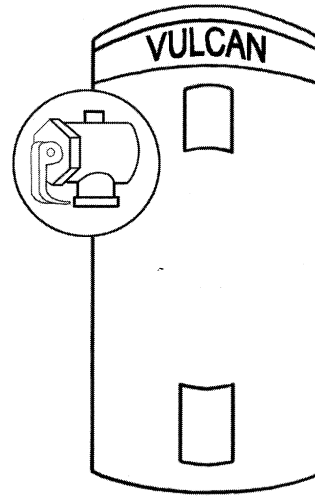

Continuous leakage of water from the valve and its drain line may indicate a problem with the water heater (refer to "Temperature Pressure Relief Valve Running" on page 12).

⚠ **Warning**: Never block the outlet of this valve or its drain line for any reason.

Operate the easing lever on the temperature pressure relief valve once every six months. **It is very important you raise and lower the lever gently.**

⚠ **DANGER:** Failure to do this may result in the water heater cylinder failing, or under certain circumstances, exploding.

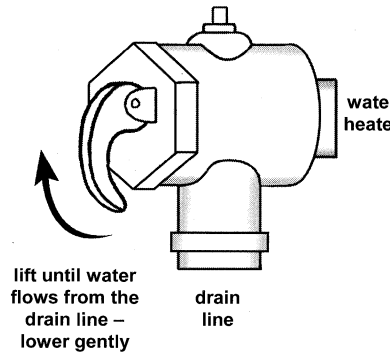

If water does not flow freely from the drain line when the lever is lifted, then the water heater should be checked by the Rheem Service Department or their Accredited Service Agent.

The temperature pressure relief valve should be checked for performance or replaced at intervals not exceeding 5 years, or more frequently in areas where there is a high incidence of water deposits (refer to "Water Supplies" on page 30).

REGULAR CARE

EXPANSION CONTROL VALVE

In many areas, including South Australia, Western Australia and scaling water areas, an expansion control valve is fitted to the cold water line to the water heater. The expansion control valve may discharge a small quantity of water from its drain line during the heating period instead of the temperature pressure relief valve on the water heater.

Operate the easing lever on the expansion control valve once every six months. **It is very important you raise and lower the lever gently.** The expansion control valve should be checked for performance or replaced at intervals not exceeding 5 years, or more frequently in areas where there is a high incidence of water deposits.

SAVE A SERVICE CALL

Check the items below before making a service call. You will be charged for attending to any condition or fault that is not related to the manufacture or failure of a part.

NOT ENOUGH HOT WATER (OR NO HOT WATER)

- **Is the electricity switched on?**
  Inspect the isolating switch marked "HOT WATER" or "WATER HEATER" at the switchboard and the isolating switch (if one is installed) near the water heater and ensure they are turned on.

  Note: Check the electricity supply to which the water heater is connected. If on an Off-Peak or time controlled electricity supply, remember heating hours are restricted (refer to "Off-Peak Electricity Supply" on page 7).

- Check the fuse marked "HOT WATER" or "WATER HEATER" at the switchboard.

- **Twin element water heaters**
  A twin element non-simultaneous model must have power available to the top heating unit circuit at all times for the water heater to operate as designed.

- **Are you using more hot water than you think?**
  Is one outlet (especially the shower) using more hot water than you think? Very often it is not realised the amount of hot water used, particularly when showering. Carefully review the family's hot water usage. Have your plumber fit a flow control valve to each shower outlet to reduce water usage.

- **Temperature pressure relief valve running**
  Is the relief valve discharging too much water? (Refer to "Temperature Pressure Relief Valve Running" on page 12).

- **Thermostat setting**
  Ensure the thermostat setting is appropriate. You may choose to have your electrician adjust the thermostat upwards to gain additional hot water capacity. Refer to "Temperature Adjustment" on page 4.

  ⚠ **Warning:** Hotter water increases the risk of scald injury.

SAVE A SERVICE CALL

- **Water heater size**
  Do you have the correct size water heater for your requirements? The sizing guide in the Vulcan sales literature suggests average sizes that may be needed.

TEMPERATURE PRESSURE RELIEF VALVE RUNNING

- **Normal Operation**
  It is normal and desirable that this valve allows a small quantity of water to escape during the heating cycle. However, if it discharges more than a bucket full of water in 24 hours, there may be another problem.

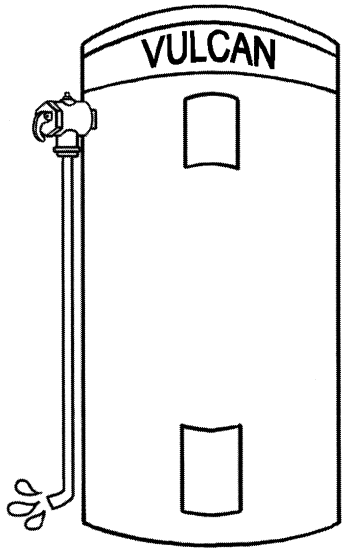

- **Continuous dribble**
  Try gently raising the easing lever on the relief valve for a few seconds (refer to "Temperature Pressure Relief Valve" on page 9). This may dislodge a small particle of foreign matter and clear the fault. Release the lever gently.

- **Steady flows for long period (often at night)**
  This may indicate the mains water pressure sometimes rises above the designed pressure of the water heater. Ask your installing plumber to fit a pressure limiting valve.

  NEVER replace the relief valve with one of a higher pressure rating.

- **Heavy flows of hot water until water heater is cold - then stops until water reheats**
  The water heater **must** be switched off at the switchboard. Phone your nearest Rheem Service Department or Accredited Service Agent to arrange for inspection.

EXPANSION CONTROL VALVE RUNNING

If an expansion control valve is fitted in the cold water line to the water heater (refer to page 22) it may discharge a small quantity of water instead of the temperature pressure relief valve on the water heater. The benefit is that energy is conserved as the discharged water is cooler.

SAVE A SERVICE CALL

HIGH ELECTRICITY BILLS

Should you at any time, feel your electricity account is too high, we suggest you check the following points:

- Is the relief valve running excessively? (Refer to "Temperature Pressure Relief Valve Running" on page 12).

- Is one outlet (especially the shower) using more hot water than you think? (Refer to "Not Enough Hot Water" on page 11).

- Is there a leaking hot water pipe, dripping hot water tap, etc? Even a small leak will waste a surprising quantity of hot water and electricity. Replace faulty tap washers, and have your plumber rectify any leaking pipe work.

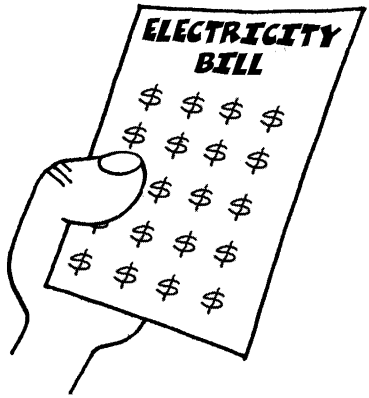

- Consider recent changes to your hot water usage pattern and check if there has been any increase in tariffs since your previous account.

ELECTRICITY TARIFFS

The electricity tariff to which your water heater is connected will determine the overall operating cost of the system. It is important you are aware of this tariff, i.e. Off-Peak (overnight) or time controlled supply, Extended Off-Peak (overnight and day) or Extended time controlled supply, Domestic or Continuous supply. For types of tariffs, refer to "Single Element Model" on page 7 and "Twin Element Model" on page 8.

IF YOU HAVE CHECKED ALL THE FOREGOING AND STILL BELIEVE YOU NEED ASSISTANCE, CALL YOUR NEAREST RHEEM SERVICE DEPARTMENT OR ACCREDITED SERVICE AGENT

INSTALLATION

THIS WATER HEATER IS NOT SUITABLE FOR POOL HEATING

WATER HEATER LOCATION

This water heater is suitable for either outdoor or indoor installation (a model with a supply cord and plug is suitable for indoor installation only). Whether located outdoor or indoor, the water heater should be installed close to the most frequently used outlet and its position chosen with safety and service in mind.

Clearance must be allowed for servicing of the water heater. The water heater must be accessible without the use of a ladder or scaffold. Make sure the temperature pressure relief valve lever is accessible and the front cover, thermostat and heating unit can be removed for service.

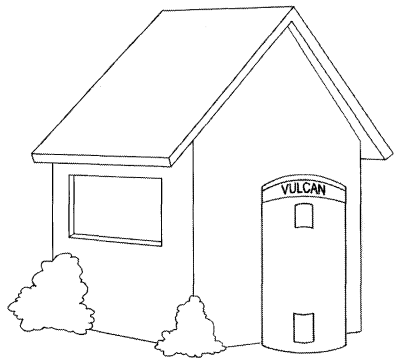

You must be able to read the information on the rating plate. If possible leave headroom of one water heater length so the anode can be inspected or replaced. Remember you may have to take the entire water heater out later for servicing.

The installation must comply with the requirements of AS/NZS 3500.4, AS/NZS 3000 and all local codes and regulatory authority requirements. In New Zealand, the installation must conform with the New Zealand Building Code.

It is recommended the water heater be installed at ground or floor level and must stand vertically upright. Remember all local authorities have regulations about putting water heaters into roof spaces.

INSTALLATION

SAFE TRAY

It is a requirement of AS/NZS 3500.4 that for a new installation, a water heater be installed in a safe tray where in the event of a leak, property may otherwise be damaged. Construction, installation and draining of a safe tray must comply with the abovementioned Standard.

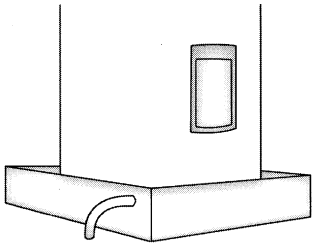

MAINS WATER SUPPLY

Where the mains water supply pressure exceeds that shown in the table below, an approved pressure limiting valve is required and should be fitted as shown in the installation diagram (refer to diagram on page 22).

Model	**050 to 160**	**250 to 400**
Relief valve setting	1400 kPa	1000 kPa
Expansion control valve setting*	1200 kPa	850 kPa
Max. mains supply pressure		
With expansion control valve	950 kPa	650 kPa
Without expansion control valve	1120 kPa	800 kPa

* Expansion control valve not supplied with water heater

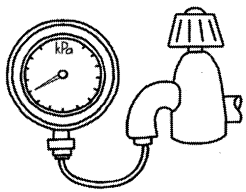

TANK WATER SUPPLY

If the water heater is supplied with water from a tank supply and a pressure pump system is not installed, then the bottom of the supply tank must be at least 1 m above the highest point of the hot water plumbing system, including the water heater. Care must be taken to avoid air locks. The cold water line to the water heater should be adequately sized and fitted with a full flow gate valve or ball valve.

INSTALLATION

HOT WATER DELIVERY

This water heater can deliver water at temperatures which can cause scalding.

It is necessary and we recommend that a temperature limiting device be fitted between the water heater and the hot water outlets in any ablution area such as a bathroom or ensuite, to reduce the risk of scalding. The installing plumber may have a legal obligation to ensure the installation of this water heater meets the delivery water temperature requirements of AS/NZS 3500.4 so that scalding water temperatures are not delivered to a bathroom, ensuite or other ablution area.

Where a temperature limiting device is installed adjacent to the water heater, the cold water line to the temperature limiting device can be branched off the cold water line either before or after the isolation valve, pressure limiting valve and non return valve to the water heater. If an expansion control valve is required, it must always be installed after the non return valve and be the last valve prior to the water heater.

If a pressure limiting valve is installed on the cold water line to the water heater and the cold water line to a temperature limiting device branches off before this valve or from another cold water line in the premises, then a pressure limiting valve of an equal pressure setting may be required prior to the temperature limiting device.

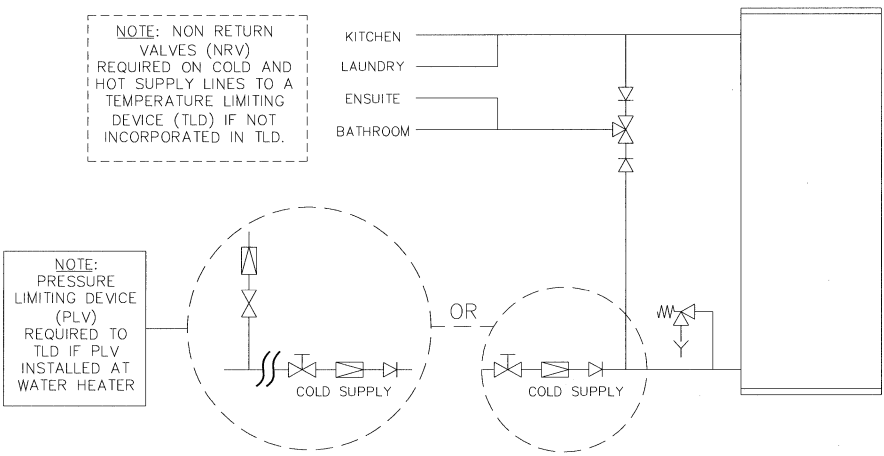

Two Temperature Zones Using a Temperature Limiting Device

INSTALLATION

CIRCULATED HOT WATER FLOW AND RETURN SYSTEM

If a Vulcan water heater is to be installed as part of a circulated hot water flow and return system, a storage water heater able to provide a hot water outlet temperature of at least 60°C must be used. **Note:** The thermostat must always be set to at least 60°C. Refer to the diagram on page 17.

Temperature Limiting Device

A temperature limiting device cannot be installed in circulated hot water flow and return pipe work. The tempered water from a temperature limiting device cannot be circulated. Where a circulated hot water flow and return system is required in a building, a temperature limiting device can only be installed on a dead leg, branching off the circulated hot water flow and return pipe.

If circulated tempered water were to be returned back to the water heater, depending on the location of the return line connection on the water supply line to the water heater, then either:

- water will be supplied to the cold water inlet of the temperature limiting device at a temperature exceeding the maximum recommended water supply temperature, or

- when the hot taps are closed no water will be supplied to the cold water inlet of the temperature limiting device whilst hot water will continue to be supplied to the hot water inlet of the temperature limiting device.

These conditions may result in either water at a temperature exceeding the requirements of AS/NZS 3500.4 being delivered to the hot water outlets in the ablution areas, or the device closing completely and not delivering water at all, or the device failing. Under either condition, the operation and performance of the device cannot be guaranteed.

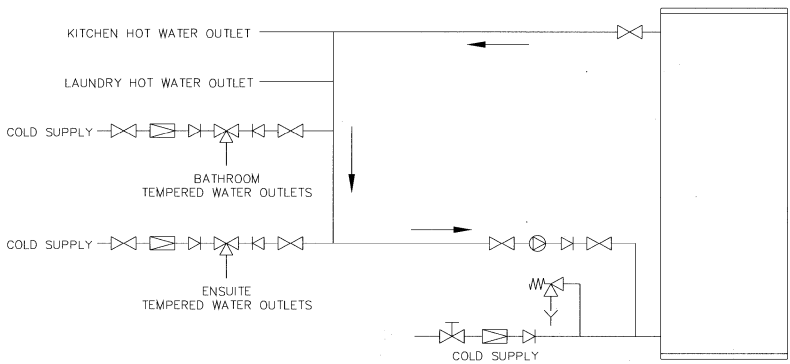

Circulated Hot Water Flow and Return – Continuous Electric Water Heater

INSTALLATION

Off-Peak or Time Controlled Electricity Supply

A single or twin element electric water heater connected to an Off-Peak electricity supply should not be installed as part of a circulated hot water flow and return system in a building. The benefits of the Off-Peak electricity supply will be significantly reduced.

If a circulated flow and return system is required, it is necessary to bypass the Off-Peak electric water heater and install a secondary water heater connected to the hot water flow and return line and supplied from the Off-Peak electric water heater. Refer to the diagram on page 18.

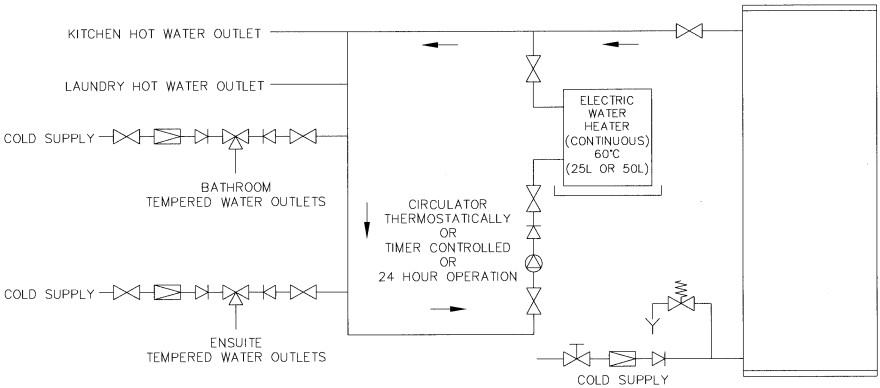

NOTE: A PLV IS REQUIRED TO BE INSTALLED ON THE COLD SUPPLY LINE TO THE TEMPERING VALVE IF A PLV IS INSTALLED ON THE COLD SUPPLY LINE TO THE WATER HEATER.

Circulated Hot Water Flow and Return – Off-Peak Electric Water Heater

REDUCING HEAT LOSSES

The cold water line to and the hot water line from the water heater must be insulated in accordance with the requirements of AS/NZS 3500.4. The insulation must be weatherproof and UV resistant if exposed.

INSTALLATION

ANODE TYPES

The correct anode type for the water supply being used must be fitted in the water heater (refer to "Water Supplies" on page 30). The black anode is fitted as standard.

Total Dissolved Solids in water supply to the water heater	Anode colour code
0-40 mg/L	Green
40-600 mg/L	Black
600-2500 mg/L	Blue

PUSH THROUGH (FREE OUTLET) INSTALLATION

It can be advantageous to plumb the water heater as a Push Through water heater in some cases. These installations can supply a single point only and normally use a 50 litre electric water heater. The temperature pressure relief valve supplied with this heater **must** be fitted to the water heater.

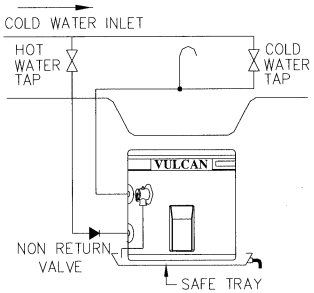

SADDLING PIPE WORK

To prevent damage to the cylinder when attaching pipe clips or saddles to the water heater jacket, we recommend the use of self drilling screws with a maximum length of 12 mm. Should pre drilling be required, extreme caution must be observed when penetrating the jacket of the water heater.

Note: Damage to the cylinder as a result of saddling to the jacket will void the warranty.

INSTALLATION

TYPICAL INSTALLATION – OUTDOOR LOCATION

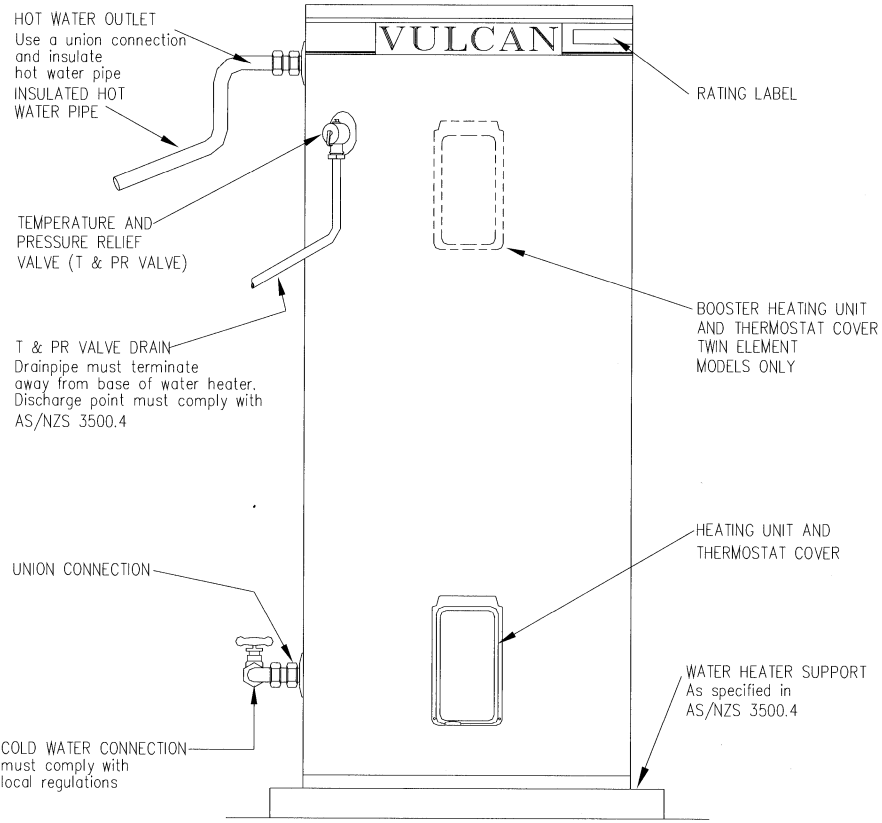

TYPICAL INSTALLATION – INDOOR LOCATION

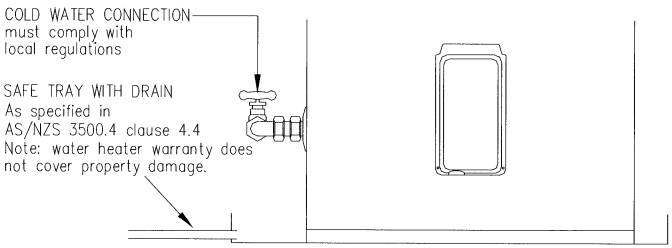

INSTALLATION

DIMENSIONS AND TECHNICAL DATA

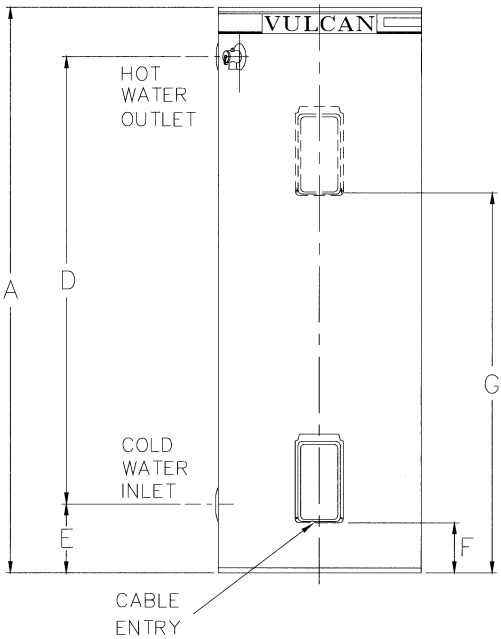

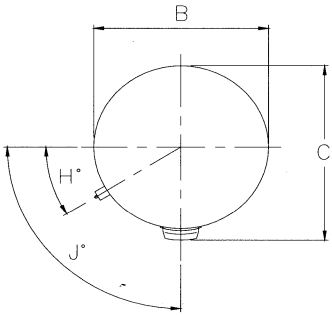

Vulcan Single Element Vulcan Twin Element			691050 -	661080 -	661125 -	661160 -	661250 -	661315 662315	661400 662400
Hot Water Delivery		Litres	50	80	125	160	250	315	400
Boost Capacity		Litres	-	-	-	-	50	50	90
Dimensions	A	mm	695	940	1340	1610	1395	1640	1840
	B	mm	393	480	480	480	640	640	690
	C	mm	429	515	515	515	680	680	730
	D	mm	396	702	1102	1332	1117	1317	1479
	E	mm	134	64	64	104	73	113	121
	F	mm	80	84	84	84	128	128	129
	G	mm	-	-	-	-	1005	1255	1346
	H	degrees	26	23	23	23	32	32	30
	J	degrees	58	58	58	58	88	88	83
Approx. Weight empty		kg	29	35	46	52	70	88	112

661 and 662 models have left hand connections.
691 models have left and right hand connections and are available in 50 litre delivery capacity only.
Single element models with right hand water connections only are available in 80 and 125 litre delivery capacities and have a 671 prefix.
Specifications are subject to change due to continuing product improvements.

CONNECTIONS – PLUMBING

CONNECTION SIZES

- Hot water connection: RP ¾/20.
- Cold water connection: RP ¾/20.
- Relief valve connection: RP ½/15.

All plumbing work must be carried out by a qualified person and in accordance with the National Plumbing Standard AS/NZS 3500.4 and local authority requirements.

WATER INLET AND OUTLET

All pipe work must be cleared of foreign matter before connection and purged before attempting to operate the water heater. All olive compression fittings must use brass or copper olives. Use thread sealing tape or approved thread sealant on all fittings.

An isolation valve and non-return valve must be installed on the cold water line to the water heater. An acceptable arrangement is shown in the diagram. Refer also to "Hot Water Delivery" on page 16 and to "Mains Water Supply" on page 15.

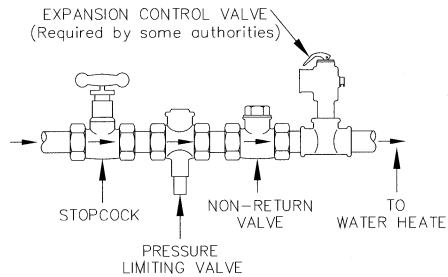

A disconnection union must always be provided at the cold water inlet and hot water outlet on the water heater to allow for disconnection of the water heater.

This water heater has either a plastic dip tube or fitting liner in the inlet and outlet fittings (see diagram). These must be in place for the water heater to function properly. Do not remove or damage them by using heat nearby. They will be pushed into the correct position as the fitting is screwed in.

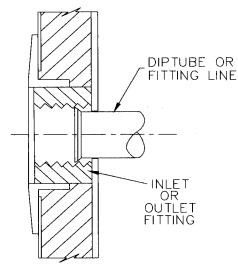

CONNECTIONS – PLUMBING

LEFT AND RIGHT HAND SIDE WATER CONNECTIONS

The cold water supply, hot water supply and temperature pressure relief valve can be connected to either side of a water heater with both left and right hand side water connections. A kit is supplied with the water heater to plug off the unused cold, hot and temperature pressure relief valve fittings. The kit contains:

Model 050
2 x ¾" brass plugs
1 x ½" brass plug
2 x large plastic insulation caps
1 x small plastic insulation cap

Plugging Off Unused Connections – 050 model

- Apply approved sealing tape or compound to the thread of each plug.
- Fit a ¾" plug to each of the unused cold water and hot water fittings and the ½" plug to the unused TPR valve fitting. Tighten the plugs.
- Fit a plastic insulation cap over each plug.

PIPE SIZES

To achieve true mains pressure operation, the cold water line to the water heater should be the same size or bigger than the hot water line from the water heater.

The pipe sizing for hot water supply systems should be carried out by persons competent to do so, choosing the most suitable pipe size for each individual application. Reference to the technical specifications of the water heater and local regulatory authority requirements must be made.

RELIEF VALVE

The temperature pressure relief valve is shipped either under the top flap of the water heater carton or behind the front cover or in a plastic bag attached to the water heater. The temperature pressure relief valve must be fitted before the water heater is operated. Before fitting the relief valve, make sure the probe has not been bent. Seal the thread with Teflon tape - never hemp. Make sure the tape does not hang over the end of the thread.

Where an insulation collar is supplied with the temperature pressure relief valve (050 models only), this must be placed over the body of the valve, prior to fitting the valve to the water heater (refer to the diagram on page 24).

CONNECTIONS – PLUMBING

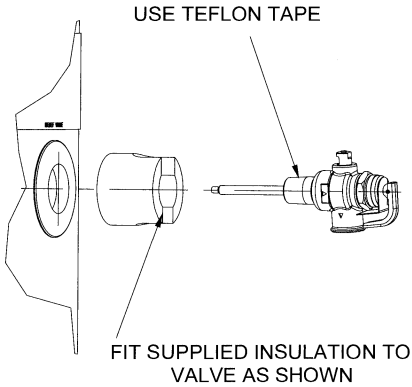

Screw the valve into the correct opening (refer to the installation diagram on page 20) leaving the valve outlet pointing downwards. Do not use a wrench on the valve body - use the spanner flats provided.

RELIEF VALVE DRAIN

A copper drain line must be fitted to the relief valve to carry the discharge clear of the water heater. Connect the drain line to the relief valve using a disconnection union. The pipe work from the relief valve to the drain should be as short as possible and fall all the way from the water heater with no restrictions. It should have no more than three right angle bends in it. Use DN15 pipe.

The outlet of the drain line must be in such a position that flow out of the pipe can be easily seen (refer to AS/NZS 3500.4) - but arranged so hot water discharge will not cause injury, damage or nuisance. The drain line must discharge at an outlet or air break not more than 9 metres from the relief valve.

In locations where water pipes are prone to freezing, the drain line must be insulated and not exceed 300 mm in length. In this instance, the drain line is to discharge into a tundish through an air gap of between 75 mm and 150 mm.

⚠ **Warning:** As the function of the temperature pressure relief valve on this water heater is to discharge high temperature water under certain conditions, it is strongly recommended the pipe work downstream of the relief valve be capable of carrying water exceeding 93°C. Failure to observe this precaution may result in damage to pipe work and property.

CONNECTIONS – PLUMBING

EXPANSION CONTROL VALVE

Local regulations may make it mandatory to install an expansion control valve (ECV) in the cold water line to the water heater. In other areas, an ECV is not required unless the saturation index is greater than +0.4 (refer to "Water Supplies" on page 30). However, an ECV may be needed in a corrosive water area where there are sufficient quantities of silica dissolved in the water.

The expansion control valve must always be installed after the non return valve and be the last valve installed prior to the water heater (refer to diagram on page 22). A copper drain line must be run separately from the drain of the relief valve.

CONNECTIONS – ELECTRICAL

The power supply to the water heater must not be switched on until the water heater is filled with water and a satisfactory megger reading is obtained.

All electrical work and permanent wiring must be carried out by a qualified person and in accordance with the Wiring Rules AS/NZS 3000 and local authority requirements.

WATER HEATER

A water heater not fitted with a supply cord and plug must be directly connected to a 240 V AC, 50 Hz mains power supply with an isolating switch installed at the switchboard.

The power supply to a twin element model should be Off-Peak (overnight) to the bottom heating unit and continuous to the top heating unit. The power supply to a single element model can be either an Off-Peak (overnight), Extended Off-Peak (overnight and day) or continuous electricity supply, depending upon the size of the water heater. Check with the local electricity supply authority as to their requirements. An Off-Peak (overnight) power supply will provide the maximum financial savings. Discuss the power supply requirements with the householder.

A flexible 20 mm conduit is required for the electrical cable to the water heater. The conduit is to be connected to the unit with a 20 mm terminator. Connect the power supply wires directly to the terminal block and earth tab connection, ensuring there are no excess wire loops inside the front cover.

A water heater fitted with a supply cord and plug must be plugged into a switched 240 V AC, 50 Hz mains power outlet rated at 10 A.

THERMOSTAT SETTING

The thermostat is adjustable from 60°C to 70°C (60°C to 75°C on 50 litre models). The thermostat is adjusted by turning the adjuster anticlockwise to decrease the temperature setting and clockwise to increase the temperature setting. Only adjust the thermostat setting when the isolating switch is switched off at the switchboard. The top thermostat on a twin element model is fixed at 60°C.

For reasons of safety and economy, we advise the thermostat be set at the lowest temperature that will provide sufficient hot water. Dishwasher running costs can be adversely affected if the thermostat is set below 65°C. If this water heater is installed as part of a solar water heating system, we recommend the thermostat is set at 60°C to maximise solar contribution. Discuss the thermostat setting requirements with the householder.

CONNECTIONS – ELECTRICAL

WIRING DIAGRAM TWIN ELEMENT ELECTRIC WATER HEATERS NON-SIMULTANEOUS OPERATION, OFF-PEAK CONNECTION

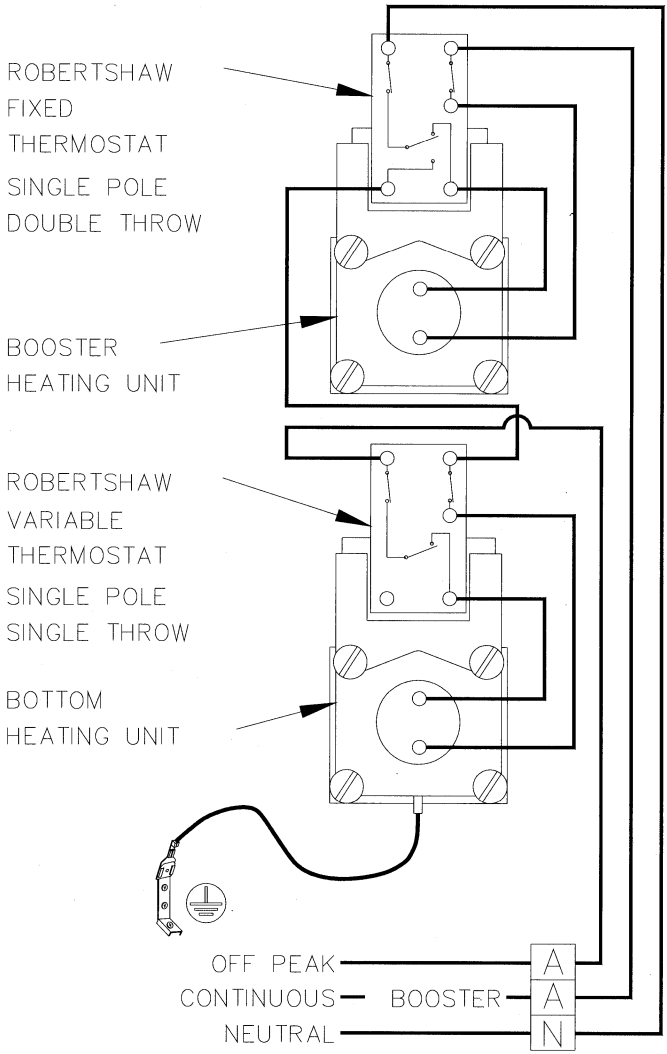

The active from the continuous supply must be connected to the top heating unit circuit and the active from the Off-Peak or time controlled supply must be connected to the bottom heating unit circuit.

COMMISSIONING

TO FILL AND TURN ON THE WATER HEATER

The power supply to the water heater must not be switched on until the water heater is filled with water and a satisfactory megger reading is obtained.

- Open all of the hot water taps in the house (don't forget the shower).
- Open the cold water isolation valve fully on the cold water line to the water heater.

  Air will be forced out of the taps.
- Close each tap as water flows freely from it.
- Check the pipe work for leaks.
- Plug in the power supply cord at the power outlet (power supply cord model only).
- Switch on the electrical supply at the isolating switch to the water heater.

Explain to the householder or a responsible officer the functions and operation of the water heater. Upon completion of the installation and commissioning of the water heater, leave this guide with the householder or a responsible officer.

TO TURN OFF THE WATER HEATER

If it is necessary to turn off the water heater on completion of the installation, such as on a building site or where the premises is vacant, then;

- Switch off the electrical supply at the isolating switch to the water heater.
- Unplug the power supply cord from the power outlet (power supply cord model only).
- Close the cold water isolation valve at the inlet to the water heater.

DRAINING THE WATER HEATER

To drain the water heater:

- Turn off the water heater (refer to "To Turn Off the Water Heater" on page 28).
- Close all hot water taps.
- Operate the relief valve release lever - do not let the lever snap back or you will damage the valve seat.

  Operating the lever will release the pressure in the water heater.
- Undo the union at the cold water inlet to the water heater and attach a hose to the water heater side of the union.

  Let the other end of the hose go to a drain.
- Operate the relief valve again.

  This will let air into the water heater and allow the water to drain through the hose.

WATER SUPPLIES

Your water heater is manufactured to suit the water conditions of most metropolitan supplies. However, there are some known water supplies which can have detrimental effects on the water heater and its operation and/or life expectancy. If you are unsure of your water quality, you can obtain information from your local water supply authority. The water heater should only be connected to a potable water supply.

ANODE

In areas where the total dissolved solids (TDS) exceeds 600 mg/L it is possible the black anode, which is the standard anode fitted to the water heater, may be excessively active. To alleviate this, the black anode should be replaced with one colour coded blue. Where the TDS of the water is less than 40 mg/L, such as when the water has been deionised or is from an alpine supply, a high potential anode, colour coded green, should be used. The changing of anodes must be carried out by a plumber or qualified service person.

CAUTION

If your water supply has a TDS greater than 600 mg/L and the anode has not been changed to a blue one, there is the possibility hydrogen gas could accumulate in the top of the water heater during long periods of no use. In areas where this is likely to occur, the installer should instruct the householder on how to dissipate the gas safely.

If, under these conditions, the water heater has not been used for two or more weeks the following procedure should be carried out before using any electrical appliances (automatic washing machines and dishwashers) which are connected to the hot water supply.

The hydrogen, which is highly flammable, should be vented safely by opening a hot tap and allowing the water to flow. There should be no smoking or naked flame near the tap whilst it is turned on. Any hydrogen gas will be dissipated. This is indicated by an unusual spurting of the water from the tap. Once the water runs freely again, any hydrogen in the system will have been released.

SATURATION INDEX

The saturation index is used as a measure of the water's corrosive or scaling properties. In a corrosive water supply, the water can attack copper parts and cause them to fail. Where the saturation index is less than –1.0, the water is corrosive and a corrosion resistant heating unit should be used.

In a scaling water supply calcium carbonate is deposited out of the water onto any hot metallic surface. Where the saturation index exceeds +0.40, the water is scaling and an expansion control valve* must be fitted on the cold water line after the non-return valve. Where the saturation index exceeds +0.80, a low watts density heating unit should be used.

Contact your nearest Rheem Service Department or Accredited Service Agent if a replacement heating unit is required.

* Refer to the cold water connection detail on page 22.

WATER HEATERS NOT INSTALLED IN ACCORDANCE WITH THE ABOVE ADVICE WILL NOT BE COVERED BY THE WARRANTY.

VULCAN WATER HEATER WARRANTY - AUSTRALIA ONLY

WARRANTY CONDITIONS

1. This warranty is applicable only to water heaters manufactured from 1st December 2006.
2. The water heater must be installed in accordance with the Vulcan water heater installation instructions, supplied with the water heater, and in accordance with all relevant statutory and local requirements of the State in which the water heater is installed.
3. Where a failed component or water heater is replaced under warranty, the balance of the original warranty period will remain effective. The replaced part or water heater does not carry a new warranty.
4. Where the water heater is installed outside the boundaries of a metropolitan area as defined by Rheem or further than 25 km from a regional Rheem branch office, or an Accredited Service Agent, the cost of transport, insurance and travelling costs between the nearest Rheem Accredited Service Agent's premises and the installed site shall be the owner's responsibility.
5. Where the water heater is installed in a position that does not allow safe, ready access, the cost of accessing the site safely, including the cost of additional materials handling and / or safety equipment, shall be the owner's responsibility.
6. The warranty only applies to the water heater and original or genuine (company) component replacement parts and therefore does not cover any plumbing or electrical parts supplied by the installer and not an integral part of the water heater, e.g. pressure limiting valve; isolation valves; non-return valves; electrical switches; pumps or fuse.
7. The water heater must be sized to supply the hot water demand in accordance with the guidelines in the Vulcan water heater literature.

WARRANTY EXCLUSIONS

1. REPAIR AND REPLACEMENT WORK WILL BE CARRIED OUT AS SET OUT IN THE VULCAN WATER HEATER WARRANTY, HOWEVER THE FOLLOWING EXCLUSIONS MAY CAUSE THE WATER HEATER WARRANTY TO BECOME VOID AND MAY INCUR A SERVICE CHARGE AND / OR COST OF PARTS.

a) Accidental damage to the water heater or any component, including: Acts of God; failure due to misuse; incorrect installation; attempts to repair the water heater other than by a Rheem Accredited Service Agent or the Rheem Service Department.

b) Where it is found there is nothing wrong with the water heater; where the complaint is related to excessive discharge from the temperature and / or pressure relief valve due to high water pressure; where there is no flow of hot water due to faulty plumbing; where water leaks are related to plumbing and not the water heater or water heater components; where there is a failure of gas, electricity or water supplies; where the supply of gas, electricity or water does not comply with relevant codes or acts.

c) Where the water heater or water heater component has failed directly or indirectly as a result of: excessive water pressure; excessive temperature and / or thermal input; blocked overflow / vent drain; corrosive atmosphere; ice formation in the pipe work to or from the water heater.

d) Where the water heater is located in a position that does not comply with the Vulcan water heater installation instructions or relevant statutory requirements, causing the need for major dismantling or removal of cupboards, doors or walls, or use of special equipment to bring the water heater to floor or ground level or to a serviceable position.

e) Repair and / or replacement of the water heater due to scale formation in the waterways or the effects of corrosive water when the water heater has been connected to a scaling or corrosive water supply as outlined in the Owner's Guide and Installation Instructions booklet.

2. SUBJECT TO ANY STATUTORY PROVISIONS TO THE CONTRARY, THIS WARRANTY EXCLUDES ANY AND ALL CLAIMS FOR DAMAGE TO FURNITURE, CARPETS, WALLS, FOUNDATIONS OR ANY OTHER CONSEQUENTIAL LOSS EITHER DIRECTLY OR INDIRECTLY DUE TO LEAKAGE FROM THE WATER HEATER, OR DUE TO LEAKAGE FROM FITTINGS AND / OR PIPE WORK OF METAL, PLASTIC OR OTHER MATERIALS CAUSED BY WATER TEMPERATURE, WORKMANSHIP OR OTHER MODES OF FAILURE.

VULCAN WATER HEATER WARRANTY - AUSTRALIA ONLY

WARRANTY

Rheem* will:

a) Repair or, if necessary replace any Vulcan water heater; or

b) Replace any component (or, if necessary, arrange the installation of a new water heater),

which falls within the Warranty Periods specified below, subject to the warranty conditions and exclusions.

Installation	Model	Period	Warranty
All Components (from date of installation)			
All installations	All models	Year 1	New component or water heater (at Rheem's sole discretion), free of charge, including labour.**
Cylinder (from date of installation)			
Water heater installed in a "single-family domestic dwelling with a thermostat setting below 76°C"	Vulcan Freeloader	Years 2 & 3	New water heater, free of charge, including labour.**
		Years 4 & 5	New water heater, free of charge, with installation and labour costs being the responsibility of the owner.
	Everhot	Years 2 & 3	New water heater, free of charge, including labour.**
		Years 4 to 7	New water heater, free of charge, with installation and labour costs being the responsibility of the owner.
Water heater installed in any other than a "single-family domestic dwelling with a thermostat setting below 76°C"	Vulcan Freeloader Everhot	Years 2 & 3	New water heater, free of charge, with installation and labour costs being the responsibility of the owner.
Heat Exchanger (from date of installation)			
Water heater installed in a "single-family domestic dwelling"	Vulcan	Years 2 to 10	New heat exchanger, free of charge, with installation and labour costs being the responsibility of the owner.
Water heater installed in any other than a "single-family domestic dwelling"	Vulcan	Years 2 to 5	New heat exchanger, free of charge, with installation and labour costs being the responsibility of the owner.

Notes:

* Rheem Australia Pty Ltd is the manufacturer of Vulcan mains pressure water heaters.

* Rheem Australia Pty Ltd is the supplier of Vulcan instantaneous gas water heaters.

** Refer to items 4 and 5 of warranty conditions.

Rheem reserves the right to transfer fully functional components from the defective water heater to the replacement water heater if required.

In addition to this warranty, the Trade Practices Act 1974 and similar laws in each state and territory provide the owner under certain circumstances with certain minimum statutory rights in relation to your Vulcan water heater. This warranty must be read subject to that legislation and nothing in this warranty has the effect of excluding, restricting or modifying those rights.

RHEEM AUSTRALIA PTY LTD
A.B.N. 21 098 823 511
www.rheem.com.au

FOR SERVICE TELEPHONE
131 031 AUSTRALIA
0800 657 335 NEW ZEALAND
or refer local Yellow Pages

Revision Date: 2006 December

121997B