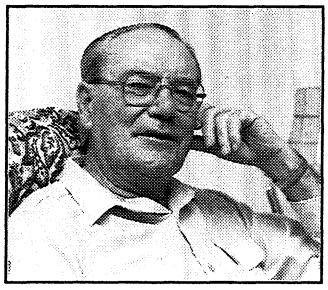

When I Think Back...

by Neville Williams

More about Charles Slade, the 'tropodyne' — and what about Fred Paton?

That many readers learned to measure electrical properties with 1930's style Australian-made test equipment is evident from the comments which followed our observations on Slade's Radio in the November 1992 issue. In this follow-up article, we present a more intimate glimpse of the late Charles Slade — plus, for good measure — a biographical note about his contemporary, Fred Paton. Ah yes, and the answer to our rhetorical question in the same issue: 'What on earth was a tropadyne?'

First off, aware that information about Charles Slade was both sparse and scattered, reader Gavin McLeod of Comboyne NSW made available a copy of Mingay's *Radio Trade Annual and Service Manual* for 1939, which contained biographical notes on the two contemporary Australian instrument pioneers: Charles Slade and Fred Paton. The *Annual* had originally belonged to Gavin's late grandfather, whom he held in high esteem as a true-blue country wireless serviceman.

Consistent with our November article, Mingay's *Annual* indicates that after training as a Royal Navy 'wireless boy' Charles Slade had served as leading telegraphist on *HMS Powerful*, transferring to British submarines during the 1914 - 18 war under Captain Boyle VC.

After a further period of service in Australian-based submarines, he left the Navy in 1922, with the rank of petty officer, settling in Australia and taking up a career in technical radio. Towards the end of 1926, he founded Slade's Radio in Croydon (NSW), launching into the production of 'Calstan' precision test equipment in 1931, in subsequent competition with Paton Electrical ('Palec') based in nearby Ashfield.

Thanks again, Gavin, for your kind assistance.

I am also indebted to W.H. (Bill) Stacey VK4WHS of Maryborough in Queensland, for photographs of an original Slade DC multimeter purchased by his father "back about 1935, give or take a year or two". Looking closely at it (Fig.1) I wouldn't be surprised if it dated back even further, to the period 1931-33.

Using a 'Calstan' movement with VOM multimeter calibrations, the panel is branded:

SLADE PRECISION INSTRUMENTS
CROYDON N.S.W.
DC MULTIMETER

The instrument is housed in a leatherette-covered plywood carrying case with a protective hinged lid — a method of construction that was considered practical and appropriate by just about every enthusiast that ever assembled his own test gear during that particular decade. The panel is of black,

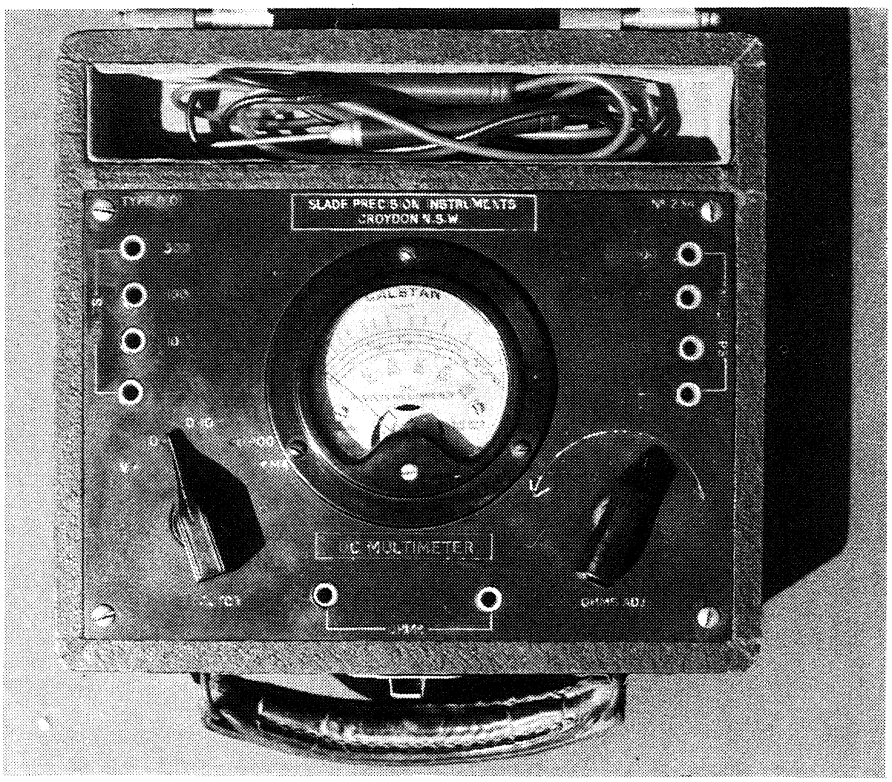

Fig.1: An original Slade/Calstan multimeter from the early 1930's, offering many Australasian enthusiasts for the first time current, resistance and voltage measurements — the last named at 1000 OPV (ohms per volt).

polished 'bakelite', but lettered more neatly than was possible at the time for the average handyman.

Basic though it may have been by present standards, Bill recalls that his father's investment created a lot of interest at the time 'in this part of the world'. Up until then, Bill says, most radio enthusiasts had to get by as best they could, "with a screwdriver and a pocket type moving iron meter for testing batteries" — a remark that checks with my own observations in the November issue.

Across the Tasman

Another radio history buff who professed a sentimental regard for early Australian instruments was Don Sutherland ZL2AJL, pictured on page 41 of the December 1991 issue. Don rang through from New Zealand, on the basis that it was easier to chat casually per optical cable than to compose a multi-page letter...

As a long-time enthusiast, Don said he was familiar with both 'Calstan' and Paton instruments but had finished up with a factory-built Paton multimeter in his collection, complete with the original user manual.

Passing mention that Slade's 'Calstan' brandname signified 'calibrated to standard' led to a chat about the uncertain accuracy of 1930's-style 'precision' meters and multimeters and, for that matter, of the 'standards' and/or transfer standards against which they were supposedly calibrated.

What really intrigued Don, however, were the directions in the Paton manual about what to do and what not to do, in the event of the meter movement being damaged by overload.

Purchasers were warned that they should never try to repair meter movements themselves, but return them to the manufacturer for repair and adjustment. The manufacturer could supply and fit a new pointer, new stop and balance components, new springs, even a new moving coil, the cost per item ranging from a mere 1/6 (one shilling and sixpence) to around 2/6 (15 - 25 cents)! At the time, Slade's prices would presumably have been of the same order.

As I recall, despite these seemingly modest charges, many technicians chose to ignore such advice, taking it upon themselves to straighten or clear bent or 'sticky' pointers, re-adjust balance counterweights and re-set zero adjustments.

There were at least two reasons for this:

(1) To 'bash' a meter made one look and feel like a careless idiot. The ability to mend it on the spot tended to restore one's credibility!

(2) At a time when spare multimeters were a rarity, returning one for repair posed the problem of how to get by in its absence.

I must confess that, in my day, I've bashed my share of meters and mended my share of pointers — but I also learned never to mess with suspension springs. What a boon it was when emerging technology made it possible to render meters more idiot proof!

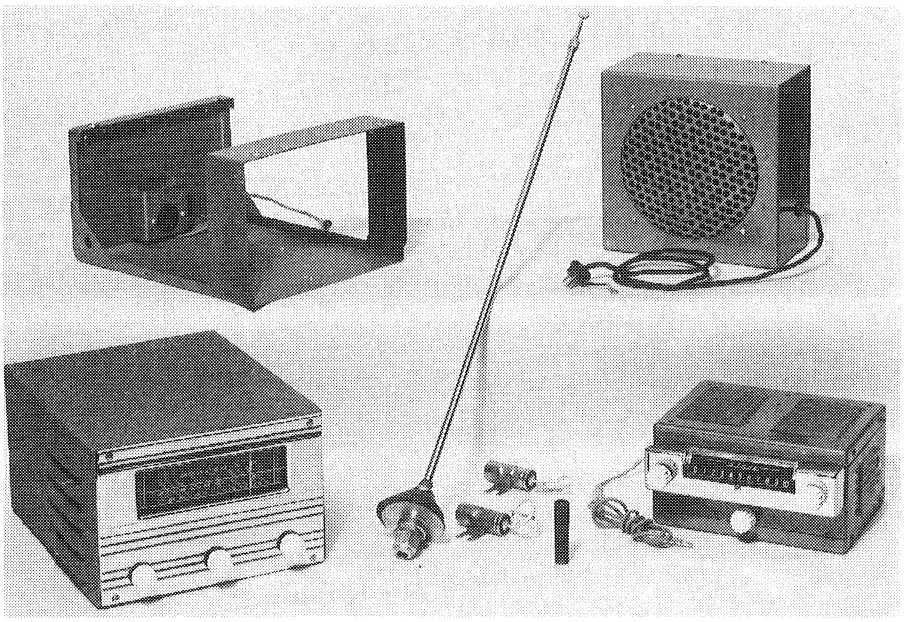

Fig.2: (Clockwise from bottom left) The basic car/mains receiver, released circa 1955; the cradle which was mounted in the vehicle; the plug-in loudspeaker; and the control head of a quite different Slade/Weston car radio. In the centre are the car antenna and optional filter components.

Only a sideline

Such matters aside, our November article carried the clear implication that, while Charles Slade is widely remembered as a pioneer of Australian test equipment, his business activities, in reality, had more to do with the manufacture and supply of semi-customised receivers and related components. A further letter — with enclosed photostats — from the indefatiguable Darryl Kasch of Maryborough, Qld, provides additional support for this observation.

A photostat from *Radio Retailer of Australia* (November 1, 1935, p.17) showed the kind of advertisement one might expect to see for Slade's Radio in the mid 1930's. Targetting dealers and servicemen, it assured them that Calstan's current type-203 valve testers, whether mains or battery powered, would accept all popular types, including the new American metal 'tubes'.

PATON OF PATON ELECTRICAL

PATON, Frederick Henry: Managing Director, Paton Electrical Pty Ltd, 20 Victoria St, Ashfield, NSW.

In 1910 joined Maritime Wireless Co, Randwick NSW and served four years apprenticeship. At outbreak of war joined field engineers and served at Gallipoli and in France, being severely wounded and eventually invalided home in 1917.

Interested in radio experimentally until taking it up commercially in 1929, making radio receivers and test equipment. Founded present company in May, 1935.

Private address 90 Victoria St, Ashfield. Born in Sydney 3/10/1895. Married; club: Amateur Fisherman's Association; recreation: angling.

However, under-scoring Slade's wider interests, a full page advertisement in *Wireless Weekly* (June 30, 1933, p.3) offered readers a factory-built version of the magazine's prize-winning '1933 Standard' receiver. Supplied complete in a console cabinet for £32/10/0 ($65) it is supported by the slogan: 'Built up to a standard, not down to a price'!

As a measure of the company's retail marketing outreach, readers were invited to call in for an 'on-the-spot personal demonstration', either at the factory at Croydon, or at 15 authorised dealers spread around the Sydney area. Alternatively, they could seek a demonstration through their local dealer. The advert also indicated that Slade's Radio would be pleased to consider applications from retailers keen to become authorised dealers in other territories.

Again, in the *Radio Retailer of Australia* (November 22, 1935) a half-page advertisement alerted readers — and especially dealers — that Slade's Radio had just released a new 'Calstan' 4/5-valve D/W model using the new 'Philips 4 volt Super Series Valves'. This was in addition to eight on-going models — D/W and broadcast, mains powered and battery operated.

Even more to the point, a quick check in the *1939 Radio Trade Annual*, mentioned earlier, indicated a startling 24 different models in the 'Calstan' range for that year!

Yet another photostat from Darryl Kasch indicates the breadth of Charlie Slade's interests in the 1930's by way of a 'letter from London', published in the *Radio & Electrical Merchant* for August 30, 1935. On an overseas fact-finding tour, he had evaluated the rival television systems being promoted in the UK by Baird and Marconi/EMI.

Having rejected outright the original 30-line technology, and after being televised by Baird's higher definition intermediate film system, he expressed himself as being quite impressed by Baird's then-current achievements — this at a time when accepted wisdom was to write Baird off as a tedious old-timer.

In all fairness, however, Baird's pioneering efforts circa 1930 had been so widely publicised that he tended to be 'stuck with' that image. In 1935, when visited by Charles Slade, and as evidenced by Baird's own lecture to the IRE World Radio Convention (Sydney, 1938), he was well aware of the need to achieve higher definition.

So much for Slade's Radio and Calstan pre-war.

Fig.3: A 1956 model radiogram, fitted out and presented in a Slade cabinet, used a chassis designed and built by Zenith.

Slade after the war

John Tyler, who currently operates a radio and TV repair business in Drummoyne, NSW, rang to say that he had read with interest the article on the late Charles Slade in the November 1992 issue, but he sensed that my informants had not known Charles Slade at a close personal level. I agreed that such was probably the case, even though some had met him in the course of everyday business.

John said that he himself had joined Slade's Radio at apprentice level in 1954 and, working in the fairly confined atmosphere of a small home-based factory, had developed a close personal friendship with Charles Slade. He had also been at his bedside when he died, some years later.

While he had therefore not been involved in his early business career, he had gained some knowledge of it from casual conversation.

He understood that, back in England, while still a 'wireless boy' attached to the Royal Navy, a very young Charlie Slade had boarded with a Mr and Mrs Ashby — both about 12 years his senior — and got on so well with them that something akin to a parent/son relationship had developed.

After the war (WW1) Charles Slade and the Ashbys had both ended up in Australia and, by mutual agreement, he rented a room in their then conventional single-story cottage in Lang St, Croydon. It was from that same address that he operated the Croydon Radio Service.

Some years later, Mr Ashby took ill and died, but not before he had received a promise from young Charles that he would look after his widow; this was on the basis that her financial needs were already reasonably well covered. It was an undertaking that Charles Slade faithfully honoured, in what was effectively a mother/son relationship.

From house to 'castle'

As the business grew, more space had to be provided at the Lang St address. John Tyler said that Mrs Ashby rather fancied herself as an architect, although she had no formal training in that field. Sufficient to say that, under her guidance, the original Ashby cottage gradually expanded outwards and upwards, until it assumed the proportions and appearance described in the November issue.

John Tyler says that, in his day, there were two separate factory areas. The 'No.1 factory', attached to the house, was the larger of the two and was used for equipment assembly and testing. The 'No.2 factory' was a separate outbuilding, set aside mainly for cabinet work and storage.

Questioned about the early production of meters and test equipment and possible co-operation with Fred Paton, John said that he could not add to what we had already said, beyond an observation that the No.1 factory could well have accommodated more bench workers than it actually did in the post-war era.

He went on to say, however, that the November article may well have overrated Charles Slade's technical contribu-

tion to the business. In his own day, he said, the design work was done mainly by people like Allan Ryding and Laurie Lawrenson. Other equipment was also bought in from time to time, which was re-badged and marketed as 'Calstan' or 'Slade'.

Searching through his papers, John came across some old snapshots of typical postwar Slade receivers but while there sufficient of them to indicate a variety of models, few were suitable for reproduction in the magazine.

One shown in Fig.2 is the AC/battery car radio receiver specifically mentioned in the November article. John Tyler says that it was actually designed and manufactured by Sel Weston, who older readers may remember as a one-time specialist in mobile vibrator-powered transceivers.

A lot of Zenith-built chassies also reached the market via Croydon, re-badged and presented as Slade. Fig.3 shows one of these, a 'radiogram'.

By contrast, a luxury receiver (Fig.4) released in 1954, featuring an open-reel tape deck, a Dual phono player and an in-built vented loudspeaker enclosure was home-grown Slade — even to the tape deck electronics.

Then again the Calstan B&W TV receiver, of which a couple of thousand were produced at Croydon, was basically an RCA design inherited via AWA and their components off-shoot companies MSP (Manufacturers Special Products) and AWV (Amalgamated Wireless Valve Co).

'The man up front'

Where Charles Slade stood out, according to John Tyler, was as a 'front man'. People visiting the Croydon premises normally found themselves talking to Slade himself. He came to be accepted not only as the boss, but as the man who had the answers! He had his idiosyncracies, for sure, but was well liked.

As to the financial structure of the business, it was unclear what proportion of it was owned by Charles Slade and how much by Mrs Ashby. Further to complicate the picture, shares were made available to trusted employees, of which John Tyler was one. Overall, however, the business suffered badly, postwar, from the indifferent health of the two principals.

Mrs Ashby, the older of the two, had long been diagnosed with heart problems and had the shorter life expectancy. However Charles Slade encountered a serious throat problem which was diagnosed in late 1960 at Guys Hospital, London, as throat/thyroid cancer. Back in Sydney, he underwent major surgery at Sydney's North Shore hospital, to little avail.

John says that he suffered serious respiratory problems and became increasingly dependent on oxygen therapy. One night in February 1962, John was called to Charles' bedside by Mrs Ashby and stayed with him as his life ebbed away. Some time later, Mrs Ashby also died and the scene was set for the ultimate dismantling of Slade's Radio, Croydon, by creditors as described in the November article by Kevin Piggott.

John Tyler says that, as a long-term employee and a residual shareholder, he might conceivably have sought to resurrect the business as a last resort; but there was literally nothing left to save. In the final crisis period, a debt of something like £200,000 had accumulated by way of unpaid sales and income tax (plus penalties), with a further substantial liability to local government, for rates and so on.

In effect, Charles Slade died without tangible resources and much the same would have been true of Mrs Ashby. The property, which still stands, was finally sold up, principally to offset local government liabilities.

John Tyler's reaction to all this was to set up his own business in nearby Drummoyne — but not without a thought for his former employer and long-time friend. Charles Slade's one-time business of 'Croydon Radio Service' was perpetuated in name only as 'Croydon Radio & TV Services' of Drummoyne, (02) 811 306.

Thank you, John, for your frank and caring contribution to the memory of a man who put the first decent meter on many a reader's test bench!

Paton and 'Palec'

In so saying, I cannot but be aware that we owe similar coverage to Paton Electrical Pty Ltd, and its founder Fred Paton. A contemporary of Charles Slade, Fred Paton also produced many of the meters once treasured by Australian enthusiasts and, for me, my first laboratory-type standard signal generator — which I still have, complete with user manual.

Unlike Slade's Radio, Paton Electrical appears to have concentrated mainly on instrumentation but, beyond what one can deduce from advertisements over the years, the only actual documentation I have on hand is a brief biography of Fred Paton, published in Mingay's *1939 Radio Trade Annual.*

It is reproduced for your guidance in the accompanying panel.

(Perhaps I should mention here that I have heard reference to a 'Jack' Paton, but am unsure whether it signified an error, a familiar nickname or perhaps some other person altogether).

Possibly because of crippling war injuries, Fred Paton appears not to have been a very public figure but maybe — just maybe — one or more readers may have old magazine clippings on hand which relate to Fred Paton and his company.

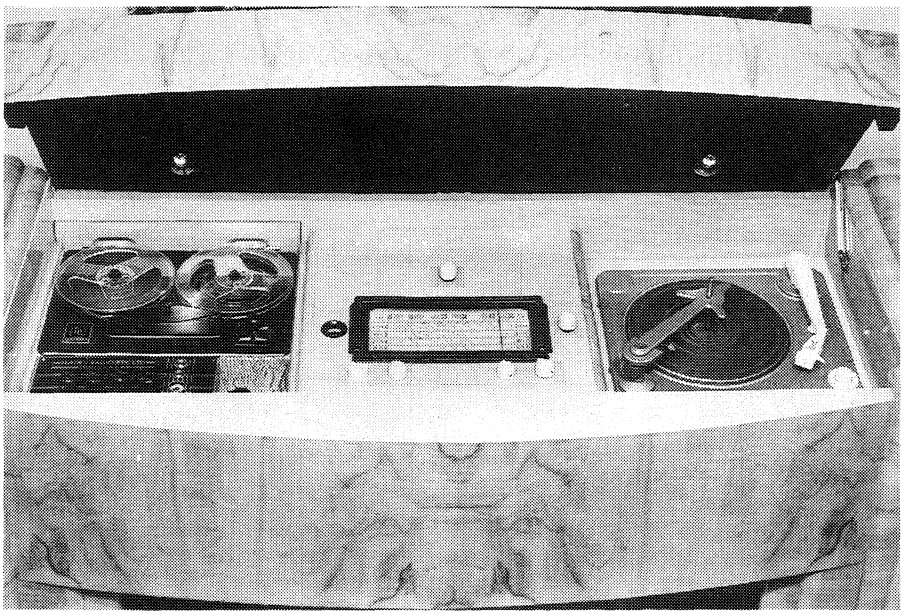

Fig.4: The control panel of a 1954 model Slade de-luxe photo-cassette player. It used a British Soundmirror tape deck with Slade electronics, a Dual type 1002 phono deck, a Slade-built chassis and was fitted into a pretentious cabinet with an inbuilt loudspeaker enclosure.

Even better, some readers may have worked for him during the 1930's, 1940's or 1950's, and/or known him personally.

But for publicity in the magazine, how else could we have made contact with Kevin Piggott or John Tyler — who, between them, have provided unique first-hand information about Charles Slade and his company?

If you can come up with clippings, photostats, illustrations or other information by way of a letter, about Paton/Palec, we'll do our best to organise it into a cohesive article.

Meet the Tropadyne

In the November 1992 issue, I mentioned a little known, now long extinct magazine called the *NSW Wireless News*. On the cover of the August 18, 1925 issue was an advertisement for the Lincoln folding loop (or frame) aerial (Fig.5).

I must confess that a folding frame aerial struck me as a potentially tangle-prone device, at best. More intriguing, however, was the statement that it was intended for use with superhet and tropadyne receivers. Hence my rhetorical question:

"What on earth is a tropadyne?"

As it turned out, an additional reason for the phone call from Don Sutherland, mentioned earlier, was to tell me that the term 'tropadyne' referred to an unusual 1920's-style battery powered superhet configuration which employed a filament-type triode as an autodyne self-oscillating mixer.

Prior to its appearance, separate oscillator and mixer stages had been regarded as mandatory in battery sets, to minimise interaction between the respective tuned circuits.

Autodyne frequency changers became routine during the early 1930's but they invariably used cathode and/or multigrid valves, which made it easier to isolate the two functions.

Even then, however, autodyne mixers proved unsuitable for multiband receivers where, on the short-wave bands, the high signal and oscillator frequencies were of a similar order, being only a few hundred kilohertz apart.

Don explained the tropadyne circuit configuration over the phone, leaving me to generate a diagram for publication as best I could. I needn't have worried, however, because the very next mail brought a letter and photostat which had been faxed to the *EA* office by Michael Eager of Brighton in Victoria. Michael is President of the Historical Radio Society of Australia, Inc.

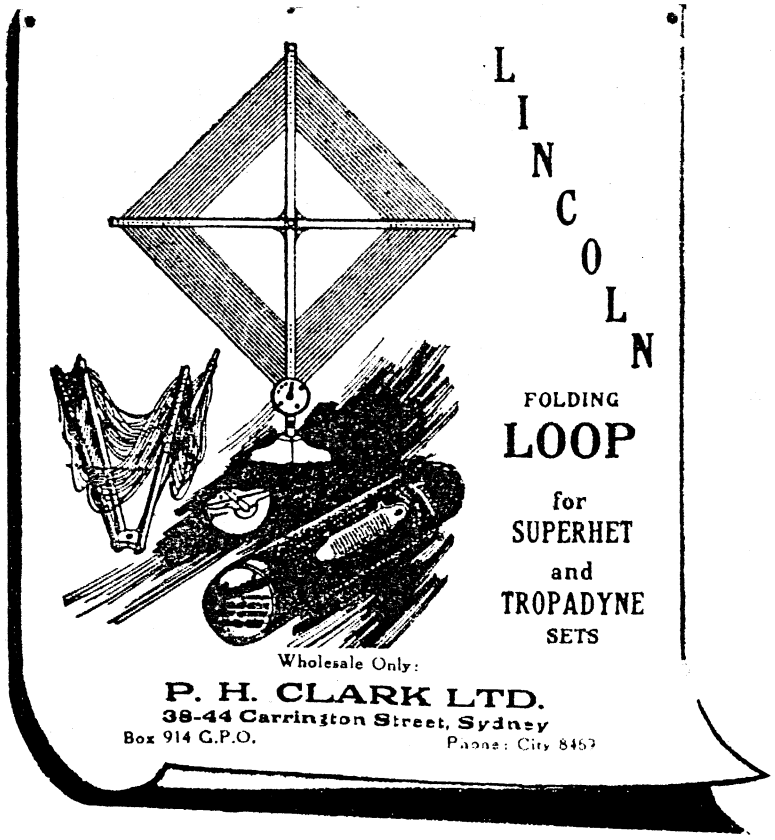

Fig.5: The original advertisement for the 'Lincoln folding loop antenna', as published in 'New Wireless News' forAugust 1925. The tropadyne circuit itself must obviously be older than this again.

The letter pointed out that the 'tropodyne' circuit — spelt with an 'o', as distinct from 'tropadyne' in the original advert — had been covered in the book *The Superheterodyne Receiver* by A.T. Witts, Pitman, London, 1934. The relevant circuit diagram is shown in Fig.6. Describing the circuit (the interpolations in brackets are mine), Witts says:

How the tropodyne works:

Another circuit which was developed to enable one (triode) *valve to be used as an oscillator and first detector* (mixer) *was known as the tropodyne and is shown in Fig.9* (6).

In this circuit a frame aerial was employed (as for most early superhets) *tuned to the incoming high frequency* (signal) *by a variable condenser* (capacitor) *connected across it.*

The aerial circuit was coupled to the

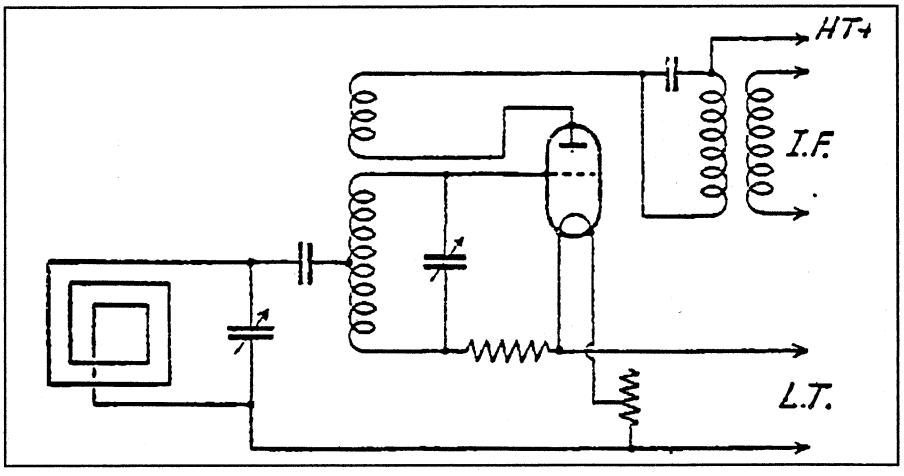

Fig.6: From 'The Superheterodyne Receiver' by A.T. Witts: an autodyne frequency changer using a single battery triode, as used in the schematic for the tropodyne configuration.

valve input (tuned) *circuit by a condenser* (capacitor, typically 250pF) *which at the same time acted as grid condenser for rectification purposes, the grid leak* (typically a 2 to 10M resistor) *being in the return* (path).

This grid coupling condenser is connected to the electrical centre of the valve input inductance coil. The valve grid circuit is tuned to the (appropriate local oscillator) *heterodyne frequency, and oscillations are maintained by feed-back from* (by means of) *a coil in the output* (anode) *circuit in the usual manner.*

Reaction (interaction) *between the aerial and valve input circuits is obviated* (minimised) *by coupling the aerial circuit to the nodal point of the input coil. Consequently the resonant frequency of either coil can be altered at will without the arrangement being thrown out of adjustment* (mutual 'pulling').

As with Houck's harmonic heterodyne circuit, the serious loss of signal strength through de-tuning, which the autodyne circuit usually involves for superheterodyne work does not occur in the tropodyne, owing to the input signals being (independently) *tuned in by the aerial circuit.*

What inspired the term 'tropodyne' is not stated, but it may possibly have been derived from 'troposphere', seen as a conduction path for long-distance signals.

It was a cunning arrangement, I must agree, although one point is noteworthy: because the grid/oscillator coil is centre-tapped, both ends and therefore both sides of the grid/oscillator tuning capacitor are active.

It would therefore need to be set well back on the baseboard and driven by a non-metallic spindle, to minimise hand-capacity effects.

Secondly, don't be mislead by the peculiar way the primary of the IF transformer is drawn. It carries current to the anode in the usual way and is shunted by a capacitor, which is certainly not usual in early superhets.

This reminds me of a remark by Don Sutherland that, as he recalls, tropodyne receivers used IF transformers which had inbuilt compression-type mica trimmers — perhaps confirmed by the capacitor in Fig.6. If they did, they would have anticipated the day when all IF transformers included provision for in-situ alignment.

Prior to that, early superhets appear to have been built around 'matched sets' of IFT's, which were/are presumed to have been self-resonant at or around some unstated supersonic frequency. ❖