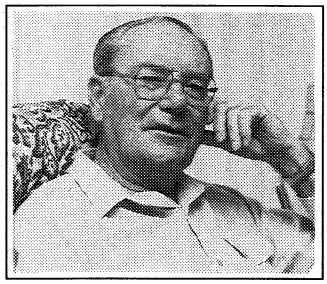

When I Think Back...

by Neville Williams

Victor Harris: Sought top performance from analog discs, with his own two hands - 1

Born in Wolverhampton UK on January 15, 1919 but based in Australia, the late Victor F. Harris devoted much of his working life to the development of 'MBH' phono pickups and a number of other products related to high fidelity reproduction from phono discs. He is perhaps unique among hifi pioneers in that, with his death a few weeks back, he has left behind a group of dedicated supporters who are already taking steps to perpetuate his memory and his work. Their cooperation has made possible this present article.

Vic Harris was very much a creature of analog technology, and it is ironic that his life's work should end about the time when analog thinking has been overtaken by the digital approach to recording. It is essential to understand the difference between the two to appreciate what Vic was all about. So let's restate the relevant audio basics:

Sonic phenomena occur when something initiates a train of pressure waves in the surrounding air, having a repetition rate or frequency in the so-called 'audible' range. For a person with good hearing, the faculty extends from about 16 hertz at the bass end to an upper limit of about 16,000Hz (16kHz).

Most of the sound we are concerned with in everday life is a complex mix of frequencies which combine to produce an on-going sonic pressure resultant, representing the instantaneous sum of all these sound pressure components plotted against time.

In turn, this complex pressure variation sets up a corresponding vibration of our eardrums. Amazingly, the human ear and associated brain functions can analyse the contour of the sound pressure resultant to sense the component frequencies — be the source(s) as random as chatter in a noisy environment, or as deliberate as a recital on a grand organ!

In creating a conventional disc recording, the sound pressure energy is employed to vibrate the recording stylus, originally by mechanical means or, more recently, by electronic technology. By vibrating the stylus tip from side-to-side (in the simplest case) the helical groove inscribed on a disc deviates accordingly — becoming, in effect, an on-going miniature graph of the sound energy being recorded. The result is described as a 'lateral' recording (see Fig.1).

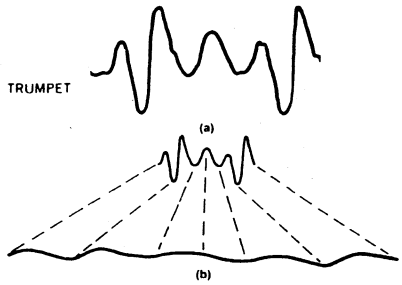

Fig.1: (a) represents a few cycles from the sound pressure wave of a trumpet, while (b) suggests how the same waveform might look as the segment of an analog groove in a laterally recorded disc.

For playback, the needle tracks the modulated groove, its resulting pattern of vibration resembling that of the original sound pressure pattern. When the recovered vibration is made audible by mechanical or electronic means, listeners hear a reproduction of the original sound.

The 'analog' method

The central feature of this process is that it seeks to preserve the shape of the original sound pattern in a different and tangible form — inscribed in a groove in a disc. When replayed, the physical 'recording' is translated back into sound having a similar pressure pattern to the original. This is described as the 'analog' approach, with each step imitating or being an analog of the one before.

Phonographs and gramophones up to and including the 1920s offered a relatively poor quality of reproduction, because the ultimate sound was compromised by inherent mechanical peculiarities or 'artefacts' of the cutter/groove/stylus analog processing, most obviously:

1. The mix of shellac and a granulated filler, used to form the early disc pressings, added an extraneous noise background of scratch, clicks and plops.
2. Mechanical resonance effects in the cutter and playback mechanism exaggerated the mid-frequency range, producing what was commonly described as an unnatural 'metallic' quality, lacking in deep bass and bright top-end sounds.
3. Variations in groove shape and frequency response, as recorded, affected the compatibility of some records and some players, further degrading the sound quality.

Listeners in the 1920s had little option but to put up with such limitations. Suppliers, by and large, were more intent on meeting market demands than on devising better technology.

During the 1930s, however, with the

growing popularity of radiograms, the release of crystal pickups proved a notable step towards better sound from disc, with increased available signal, less dominant mid frequencies and extended bass response.

Crystal pickups came to dominate the domestic record player market during the 1940s and 1950s, and along with gradual improvements in the quality of 78rpm pressings, customer expectations of new records and record players put pressure on the industry at the everyday shop-floor level.

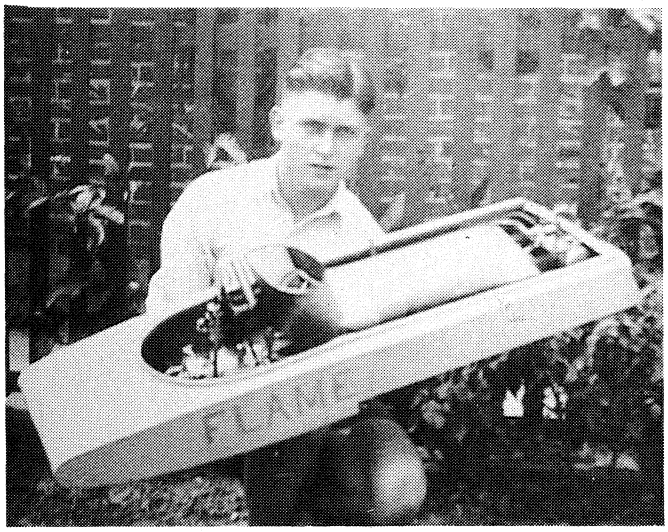

Fig.2: The late Vic Harris, photographed with his first steam-powered model boat around 1935. Such projects honed his skills for engineering in miniature. (Photo courtesy Peter Stinson).

Hifi in the thirties

But so also did the expectations of 'hifi' enthusiasts, who set up a world-wide clamour for better than average discs, pickups and amplifier systems.

It was evidenced in this magazine, for example, when Editor John Moyle and staff dreamed up the 'Playmaster' series of do-it-yourself amplifiers, with circuitry to compensate for different makes of 78rpm discs, along with *ffrr* (full frequency range response) and fine-groove pressings, and the proposed 45rpm and 33rpm microgroove formats.

In the process, it became apparent that commercial crystal pickups did not lend themselves to accurate frequency compensation, and that the future of hifi reproduction lay in high quality magnetic types. In other words, to recapture an accurate analog signal from the improved records, there was an acute need for precision magnetic pickups.

Nor were we alone, with other audio-hifi magazines worldwide carrying a similar message. It was an audio setting tailor-made for a man like Vic Harris, whose burning ambition was to produce Australian-made pickups and other equipment which could reconstitute programs off disc as free as possible from the persistent artefacts of the analog system: background noise, distortion and limited frequency response.

According to his friends, Vic was a hifi purist/perfectionist who tended to reserve judgment on anything that he hadn't worked on himself, with his own two hands! If any aspect of analog mechanics could be refined, they said, Vic would do his darndest to find a way to achieve it!

Peter Stinson of Dee Why, NSW, who organised much of the material for this biography says: "his committment to quality was complete; so much so, that he was unlikely ever to make a fortune out of it". Again: "He was an extremely nice bloke; that wouldn't have helped, either, in the cut-throat world of commercial hifi!"

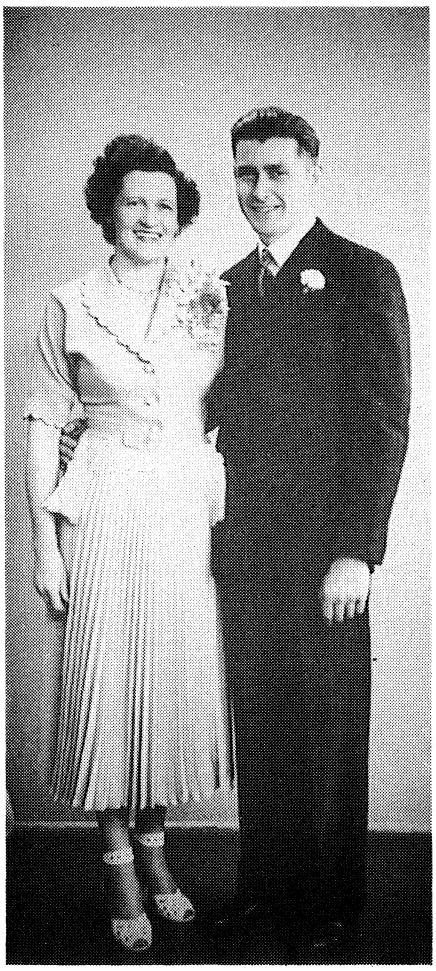

Fig.3: Looking very much the groom, Vic Harris with his new wife Mary in the late 1940s. They set up home in Croydon, handy both to Vic's original workshop in Ashfield and his subsequent factory at Flemington. (Photo courtesy Peter Stinson).

Nature's gentleman

Another of Vic Harris' friends, Richard Dibbs, agreed that Vic Harris was a perfectionist — but not to the point where he would ignore the practical aspect. He was quite capable of concluding: "It could be done this way instead of that way, but you'd never hear the difference!"

"Vic Harris was a very clever and knowledgeable engineer" said Richard, "but, first and foremost, I choose to remember him as one of nature's gentlemen."

For my information, Peter Stinson enclosed a set of handwritten notes, covering Vic's work with pickups; notes which Vic had prepared for a talk/lecture given to the NSW Phonograph Society around 1988.

Vic told the members that his parents had installed a radio quite soon after broadcasting began in the UK, but they had never owned a gramophone. They preferred to make their own music, and he suspected that his father disdained 'mechanical' music in the form of the pianola and gramophone.

The Harris family moved to Australia in 1927, mainly because Vic — then aged eight — was suffering from recurrent bronchial problems in his home country. According to his sister Irene, they took up residence in Ashfield, in Sydney's inner west.

In Australia, in his mid 'teens, young Vic came to realise that a whole world of music lay in records. He managed to acquire a spring-driven turntable, to which he fitted a pickup for connection to an existing radio set. Said Vic: "It was to be the first of a number of record players of gradually increasing complexity, with post-war shortages often putting my ingenuity to the test."

That Vic was not the only one with problems became evident when Jack (later Sir John) Tuite made it known that even the PMG Dept was having difficulty in obtaining satisfactory pickups for use by the ABC radio stations. The statement caused Vic to wonder whether he might, one day, be able to produce what they were looking for.

Basic skills

It may have seemed presumptive on his part but, by this time, Vic was no stranger to the subject, with a growing passion for classical music. What's more, his father had been a skilled machinist and tookmaker, who had worked in the Sunbeam car factory at Wolverhampton. Young Vic had followed in his father's footsteps, studying fitting, machining, tool-making and electrical trades at technical college in Sydney. He had also become involved in the Society of Model Engineers (Ashfield) who had even adjusted their rules to admit him as a Junior Member.

As such, he built a couple of model speedboats, one of which featured on cinema newsreels (Fig.2). As an encore, he devised a model gyroscopic train which performed on a single track laid around the family backyard.

Those who knew him agreed that Vic had a very practical turn of mind. He could think his way through mechanical problems, devise tools and draw up engineering plans. He was also very systematic, and kept detailed files of everything he did.

During the 1930s, Vic had also worked for a time at Paton Electrical Instruments and at Magnavox as a foreman, where he was exposed respectively to instrumentation and loudspeaker technology.

At a personal level, according to his sister, Vic was a keen bushwalker, played social tennis and founded a Discussion Club which debated a variety of topics in one another's homes.

As an active member of the Peace Pledge Union, he refused to enrol for wartime service, although offering to undertake non-combatant duties. In court, the judge accepted the sincerity of his beliefs and imposed no sentence.

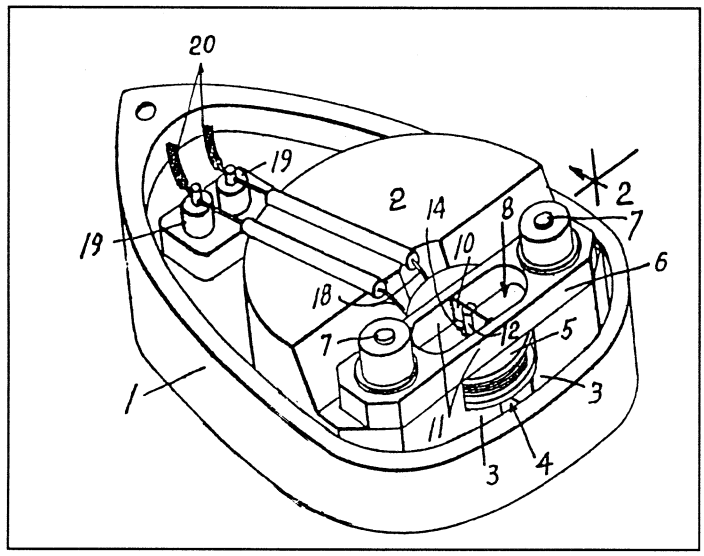

Fig.4: From Vic Harris' own lecture notes, a representation of the original HH pickup head, keyed as follows: 2 is the magnet, 3 & 3 the pole tips and 5 the coil. 10 is the torsion bar and 24 the socket into which the stylus assembly screws from beneath.

Vic married Mary in 1947 (Fig.3) and settled down in nearby Croydon to a quiet way of life with his classical recordings, current literature on applied science and his workshop.

Backyard workshop

In 1946, he had opened his own small machine shop business in the backyard of the family home in Knocklayde Street, Ashfield — close to the one-time AWA site. Here he was finally able to pursue the design of professional grade audio equipment. The basic trouble with pickups of the day, Vic reasoned, was that the needle/armature combination was far too heavy, with the natural resonance occurring in mid-spectrum and so pronounced as to require stiff rubber damping, thereby compromising the basic compliance of the system.

Vic reasoned that if he could make the assembly light enough, the resonance would move up to a frequency where sufficient damping could be provided on the stylus tip by the record material itself. While a shellac pressing appeared to be hard, he said, its texture as sensed by a stylus tip was in reality 'somewhat rubbery'. The texture of an acetate disc was even more so.

After a few attempts, around 1946, Vic produced a head with a resonance around 14-15kHz. The resonance amplitude was relatively low and well outside the currently recorded range. (At the time, EMI recorded through signal filters which rolled off above 6.5kHz.)

The stylus tracking weight of the new head was 14 grams — very modest for the period — and its nominal output was about 10mV (-45dB) from a source impedance of about 500 ohms.

His first patent on pickup design, based on the above, was granted during the following year, being featured as a new product release in the November 1947 issue of this magazine, then called *Radio & Hobbies*. (See Figs.4 and 5.)

This same pickup was described in Vic's lecture notes as a 'leakage flux' type, with the shank of the sapphire stylus serving as the armature. The stylus assembly — or shaft — had a 16BA thread on its upper end and a Morse taper on the lower end just above the sapphire.

For the stylus to screw into, a tiny socket was brazed onto an overhead torsion bar. A special tool like a diminutive socket spanner engaged the Morse taper to insert or unscrew the stylus.

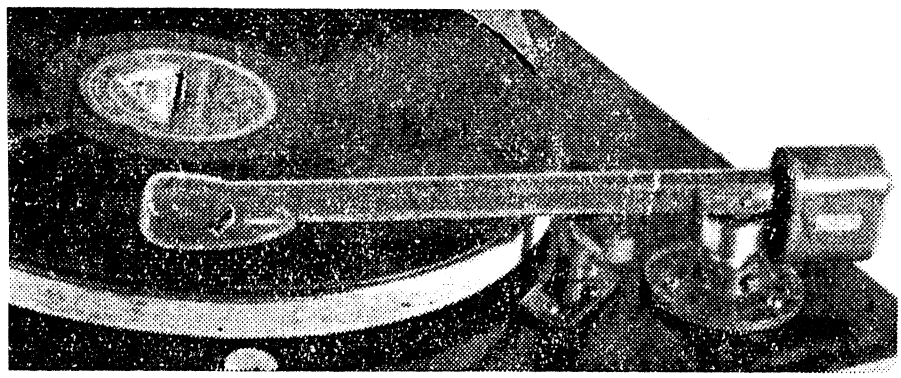

Fig.5: The HH (Hummelstad Harris) hifi pickup, as announced in the November 1949 issue of 'Radio & Hobbies' magazine. Outstanding at the time, it marked the beginning of Vic Harris' career.

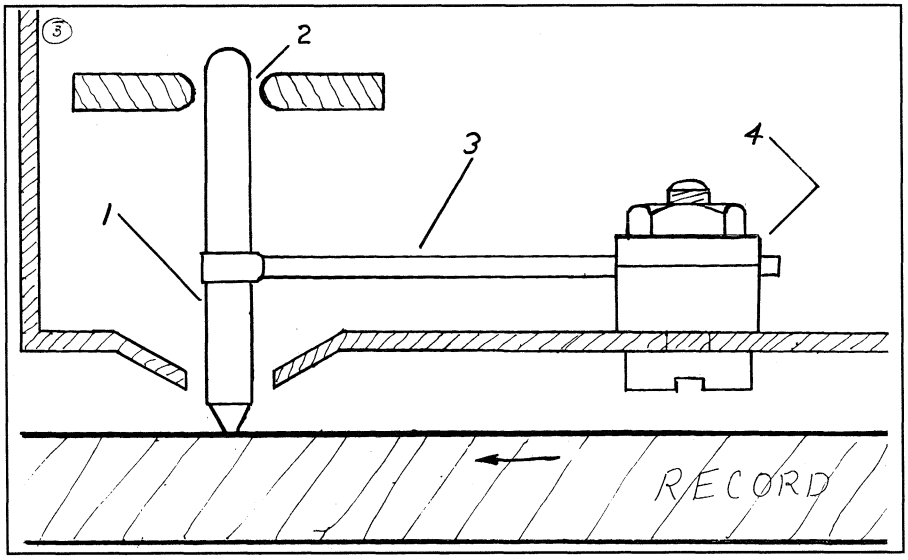

Fig.6: Adapted from Vic Harris' own notes, this sketch provides a keyed side-on plan of the MBH-D mono pickup head. 1 is the stylus assembly-cum-armature, which passes through the clearance hole 2 in playing mode. 3 is the spring support wire and 4 the adjustable clamp.

Jewel styli queried

By reason of the modest playing weight (for those days) and the high compliance, the playing time for the sapphire tip was rated at 200 hours with shellac pressings, and higher for acetates. In fact, despite Edison's earlier endorsement of jewel styli, some of Vic Harris' potential customers seemed to be more concerned that jewel tips might damage their recordings!

Vic's design also faced the problem of needing a step-up transformer or a preamplifier with about 10 times gain, to boost the output to that of the older, heavy magnetic types.

Despite such reservations, Vic said that he sold more than 100 such pickups, many of them going into broadcast stations, where the provision of a transformer or preamplifier posed no problem. This 1947 pickup was branded as 'HH' in recognition of Greg Hummelstad, who was said to have partnered Vic Harris in some peripheral activities to do with audio transformers, filters and amplifiers.

The most notable flaw in the HH design was that the stylus had very little vertical compliance, and no provision to retract if accidentally dropped on to the disc. For that matter, neither did many — or any — other pickups on the market at the time, but the HH was arguably more vulnerable because of its jewel stylus.

According to Vic's sister, Vic and Greg Hummelstad went their own separate ways following the release of the HH pickup. Vic set up a small factory at nearby Flemington, to pursue phono and allied technology; Greg chose to specialise in cinema sound systems.

About this same time, Decca also released a new high performance pickup which was commonly assumed to be similar in principle to the HH. In fact, said Vic, it employed a conventional T-shaped armature and relied on conventional rubber blocks for damping.

1950 saw a move by the record companies to raise the cutoff frequency of their filters to 8kHz, then 10kHz, and finally removing them altogether. This done, it transpired that cutting heads designed by A.D. Blumlein for EMI were able to cut reasonably flat to 20kHz, evidenced by the issue of their test disc ED1189.

20kHz on a 78 disc!

This was quite an accomplishment at the time, and I have a vague recollection that it was demonstrated to the Sydney Division of the IRE by Sir Ernest Fisk, who was by then Managing Director of EMI in the UK. Unable to hear 20kHz, the audience could only gaze with wonderment at the sine wave on a CRO screen!

In his lecture to the Gramophone Society, Vic Harris recalled that Blumlein's cutter had out-performed all 78rpm pickups currently available on the market. Even though well above average, the original HH model clearly had to be upgraded — or superseded — to extend the frequency response and provide vertical compliance for the jewelled stylus. Simply reducing the stylus mass of the original HH was not an option, because even by halving the moving mass, the resonance would still fall short of 20kHz. The output would also be reduced to an impractical level, relative to noise, for the valve preamplifiers of the day.

So Vic Harris addressed himself to a completely new leakage flux design, which was branded 'MBH' — which, he

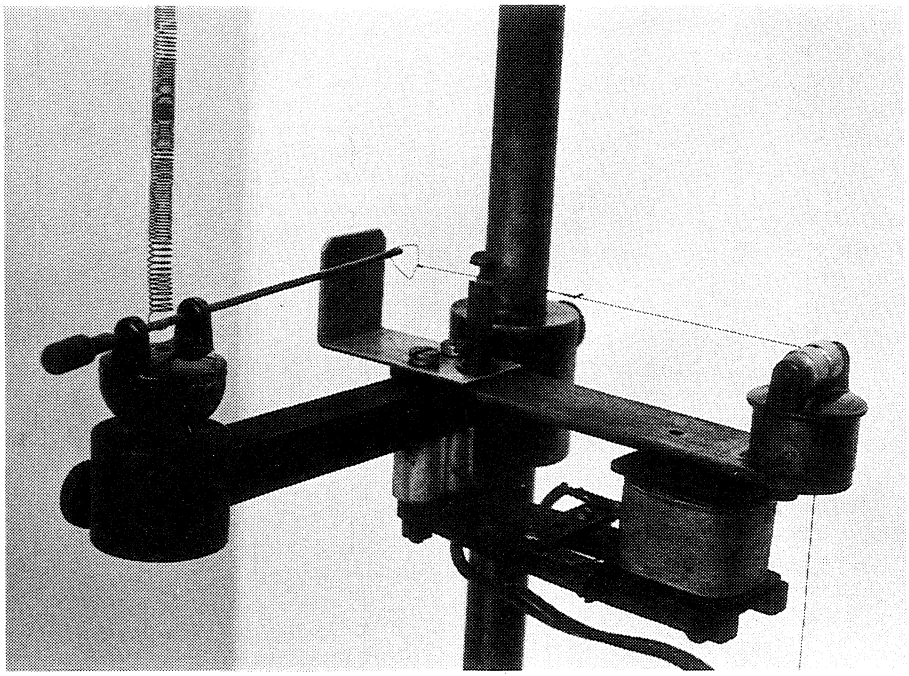

Fig.8: The torsion balance used in the MBH factory to adjust the groove tracking bias spring in the Equidyne arms. It resembles the thread and counterweight system used by some rival brands.

said (somewhat tongue in cheek) meant 'Made By Harris'. The letters also happened to be his wife's initials...

In the new MBH type 'A' pickup, the stylus was supported from behind by a single spring wire 'chuck'. The front end of the wire held the stylus near its centre; the rear end was locked under an adjustable clamp, which provided a centring facility, allowing the stylus to move both sideways and vertically. The top of the stylus assembly was able to move up through a guide hole in the housing, having a critically small clearance. Vic went on to explain in the lecture that the function of the guide hole was both complex and critical. Most obviously, it allowed the stylus to retract upwards in the event of the pickup being dropped on to the record — an omission in the HH design.

Fixed counterweight

Under normal play conditions, the forces on the head were designed to interact with the chuck support spring such that the jewel tip was suitably exposed, with the chuck itself stabilised halfway between the stylus tip and the clearance hole. It was mainly for this reason that MBH pickups had no provision for an adjustable counterweight, the correct — and critical — tracking conditions being pre-adjusted at the factory.

In normal playing mode, the groove drag on the stylus tip tilted the top of the stylus back against the rear surface of the clearance hole, which became a virtual top pivot for the stylus assembly. With the lower tip of the stylus gripped by the groove and the full length of the stylus vibrating within the magnetic gap, the signal output from the magnet coils was optimised at a nominal signal output of around 60 millivolts RMS.

In the higher frequency range, said Vic Harris, the mass of the stylus assembly affected its behaviour such that, instead of remaining stationary against the rear of the clearance hole, it "tended to float nearer the centre of the guide hole".

As implied earlier, a stylus assembly of this general mass is likely to exhibit a natural resonance of around 12kHz. But when this secondary effect occurred with the MBH design, it caused "the top of the stylus to vibrate sideways because of the guide clearance". To continue the quote from Vic's lecture notes:

"With the top moving one way and the tip the other, the centre where the chuck is simply pivots, the chuck being able to twist. You can see that with a simple twisting movement, the portion of the stylus above the chuck approaches one pole piece as the portion below the chuck approaches the other."

"Thus there is no net magnetising of the chuck due to this movement; consequently no (extra) current is produced in the coil. In short, the (12kHz) resonance occurs, but generates nothing."

Vic adds that the pickups in question do have a further resonance mode related to the chuck, occurring at about 24kHz in pickups when "in good order". As such it would lie beyond the audible range.

Off the beaten track

Elsewhere, he says that, from model - A the MBH pickup "was able to play ED1189 disc right up to 20kHz, flat to within about 3dB (which was) way ahead of anything else on the market at that time". The output level was also very satisfactory, being a nominal 60 millivolts from a 3cm/second groove modulation.

If you find the above explanations somewhat bewildering — and off the beaten track — don't be surprised. I faced a similar problem in working my way through Vic Harris' lecture notes! Could I really accept that Vic Harris had worked out the configuration of his new pickup and foreseen the complex vibration modes — all in a single flash of inspiration?

To me, it seemed more likely that Vic's progress from the original HH pickup to the MBH design(s) would more likely have been a prolonged process of development spread over months, even years. Both Peter Stinson and Richard Dibbs agreed that such was probably the case; that Vic Harris tended to ponder at length on the finer points of his products — seeking always to minimise what I described earlier as unwanted artefacts of the analog system.

Early in his personal introduction to the MBH family of pickup heads, Vic says:

"I will point out some important factors. The top of the stylus enters a guide above the coil. In the earliest models, this was simply a hole in the bakelite top plate. The hole allowed the stylus to slide up and down for the retracting action. It also acts as a pivot for the top of the stylus. It is important that the guide does not closely fit the stylus but has a certain clearance."

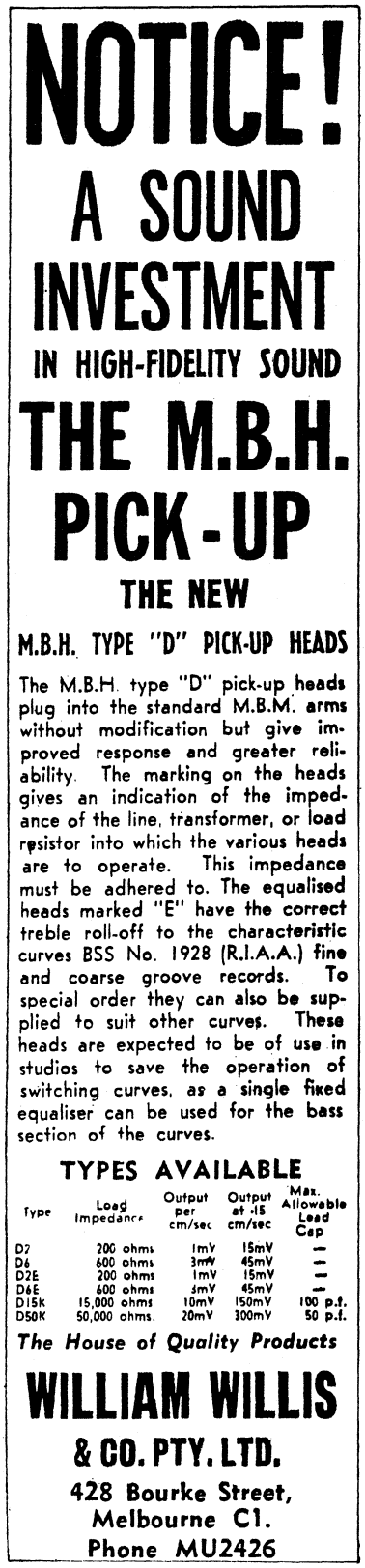
NOTICE!

A SOUND INVESTMENT

IN HIGH-FIDELITY SOUND

THE M.B.H. PICK-UP

THE NEW

M.B.H. TYPE "D" PICK-UP HEADS

The M.B.H. type "D" pick-up heads plug into the standard M.B.M. arms without modification but give improved response and greater reliability. The marking on the heads gives an indication of the impedance of the line, transformer, or load resistor into which the various heads are to operate. This impedance must be adhered to. The equalised heads marked "E" have the correct treble roll-off to the characteristic curves BSS No. 1928 (R.I.A.A.) fine and coarse groove records. To special order they can also be supplied to suit other curves. These heads are expected to be of use in studios to save the operation of switching curves, as a single fixed equaliser can be used for the bass section of the curves.

TYPES AVAILABLE

Type	Load Impedance	Output per cm/sec	Output at ·15 cm/sec	Max. Allowable Lead Cap
D7	200 ohms	1mV	15mV	—
D6	600 ohms	3mV	45mV	—
D2E	200 ohms	1mV	15mV	—
D6E	600 ohms	3mV	45mV	—
D15K	15,000 ohms	10mV	150mV	100 p.f.
D50K	50,000 ohms.	20mV	300mV	50 p.f.

The House of Quality Products

WILLIAM WILLIS & CO. PTY. LTD.

428 Bourke Street, Melbourne C1.

Phone MU2426

Fig.7: An indication of why Vic Harris formed such a strong bond with individual customers — six cataloged versions of the top of the range MBH-D mono cartridge.

In the margin between the two pars above Vic has inserted a note, clearly an afterthought, adding: *These are not in the patent spec. Nor does anyone else know them.*

It seems likely that, in planning the new MBH pickup heads, Vic's initial step was to address the obvious need for vertical compliance — hence the spring wire chuck and the clearance hole in the top plate for the top of the stylus. Out of this came the question: What size should the hole be? Neat? Clearance? How much?

At this juncture, I would guess, Vic became aware that the hole had an unexpected secondary effect on the behaviour of the stylus, which he then set about to investigate and optimise. Hence his conclusion that the diameter was 'critical', and his subsequent observations about the various vibration modes of the stylus.

Observation or speculation? Without questioning for one moment the ultimate performance of the MBH heads, I do wonder what Vic's peers might have to say on the matter!

Sufficient to say, four official versions of the MBH pick-up head were released, plus variants each carrying progressive refinements: the MBH-A, -B, -C, and -D. In the last of these, the -D type, the stylus guide was fitted with an insert made from a resilient material; but, says Vic, "the hole for the stylus remained critical".

To optimise the heads for playing LP mono records, they were fitted with a softer chuck and the overall mass was reduced at the factory to ensure that (a) the playing weight on the stylus tip would be suitably reduced, and (b) the chuck would be accurately centred between the stylus tip and the clearance hole.

An advert in this magazine (then *R, TV & H*) for William Willis & Co dated November 1957, featured the then available MBH type D heads. Six standard variants were listed, ranging in impedance from 200 to 50k ohms. Still other variants were offered on special order, to meet the requirements of professional studios (Fig.7).

Anti-skating arm

In 1958, said Vic, he introduced an arm for the MBH heads which countered the tendency for a pickup using an offset head or bent arm to climb up the inner groove wall. It had a torsion spring associated with the bearing stem, which was 'wound up' as appropriate in the factory by means of torsion balance (Fig.8).

The idea was referred to in the industry as 'anti-skating', and gave rise to a variety of alternative arrangements by other manufacturers. The MBH arm was patented and referred to as the 'Equidyne' arm, signifying 'equal force'. It was notable that MBH arms were only ever designed to be compatible with MBH heads, and vice versa. Vic much preferred his own head socket, and factory adjustment for playing weight and tracking bias.

The important thing for Vic was that the basic MBH design performed well and attracted the support of professional users, largely by 'word of mouth' recommendation. To quote from his lecture, he said:

"Over 5000 were sold, many of them overseas. One quite good customer was EMI, both in Australia and at Hayes (UK) for their own use — including the checking of masters prior to production. The Indian Government bought over 1000."

Next month we'll continue the story with the age of stereo, commercial activities, and the fire that destroyed the MBH factory.

(*To be continued.*) ❖