VINTAGE RADIO

By JOHN HILL

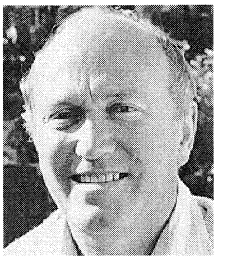

A simple regenerative receiver

Building simple regenerative receivers is a lot of fun and, best of all, it won't break the bank. Here's how to build a simple 1-transistor radio receiver.

I can still remember the excitement caused by my first one valve regenerative receiver, which was built when I was a lad. It seemed to perform nearly as well as the 5-valve Radiola in the lounge room, the only difference being that my little radio would only drive headphones, not a loudspeaker.

Of course, such a statement is strongly biased by youthful memories of something that had been home-built with loving care. Naturally, a 1-valve regenerative receiver could not compete with a 5-valve superhet – although it seemed to at the time!

One station that was often received at night was 2NZ. To hear "this is 2NZ northern New South Wales" through the headphones was nothing short of amazing when one lived in Bendigo. That little regenerative set could really drag in those distant stations.

Regeneration or "reaction" is a form of positive feedback whereby some of the amplified radio frequency (RF) energy is fed back in phase to the tuning coil, boosting signal strength and improving selectivity. Another way of looking at this is to visualise the signal being fed back as acting to overcome the natural losses – mainly resistive – in the tuned circuit. It was a technique commonly used in early receiver designs before the superhet era.

Unfortunately, too much regeneration causes distortion and the possibility of the set bursting into oscillation.

Regeneration gave a simple receiver such as a 1-valver a tremendous lift in performance. In fact, when connected to a good aerial and earth, a 1-valve regenerative outfit is nothing short of amazing. One gets so much from so few parts.

Even today, I still enjoy building and listening to simple 1 and 2-valve regenerative sets and I know that I'm not alone in this regard; many other vintage radio enthusiasts do likewise. It seems as though little boys never really grow up.

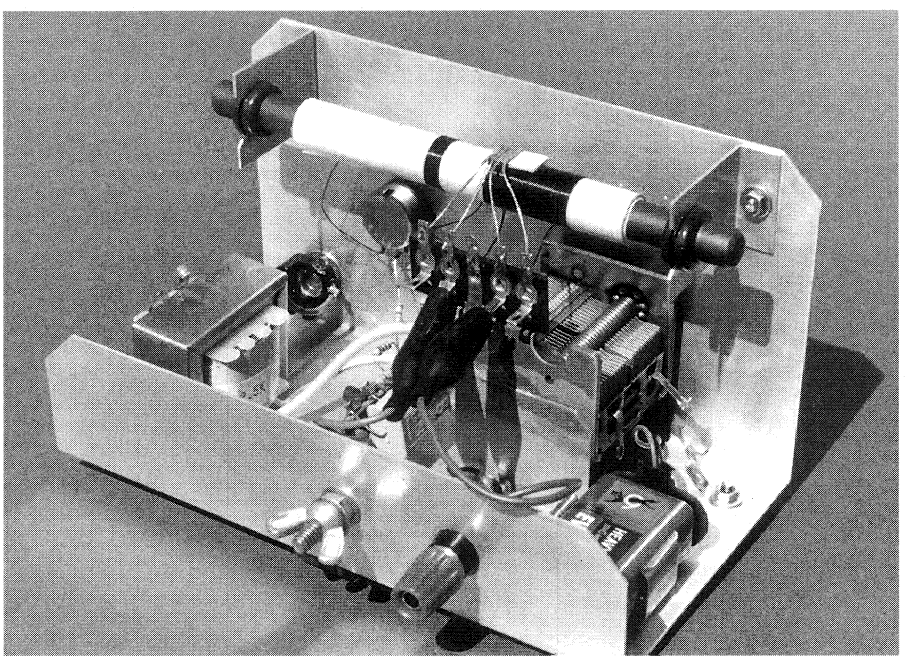

The original Trans-1 as built by David Waldron. The receiver was built into an aluminium chassis and went through several experimental stages before this unit was produced.

A 1-transistor design

David, a young collector friend, is also a keen devotee of regenerative receivers and has built numerous sets employing this simple circuitry. He has built several AC-powered shortwave sets with plug-in coils and they really are good performers. With careful regeneration control manipulation, even single sideband transmissions can be received reasonably well.

The latest regenerative set which David has built is a departure from normal and uses a single high gain transistor and a ferrite rod aerial. This month's story is about David's one-transistor regenerative receiver – the "Trans-1".

The circuit shown is as supplied and there have been no alterations to it at all. The set went through several

developmental stages before reaching finality and involved quite a few hours of trial and error experimentation.

The main problem encountered with Trans-1 was with the regeneration control. It would operate reasonably well at the low-frequency end of the dial but was a bit touchy and difficult to control at the high-frequency end. The addition of a few resistors at strategic places in the regeneration circuit smoothed over this problem and the reaction control is as good as one could hope for in a receiver of this type.

Regeneration is controlled by a 5kΩ linear potentiometer. This was used in preference to the small variable capacitor often used in this type of receiver.

Perhaps the most remarkable aspect of this little 1-transistor radio is the fact that it performs every bit as good as a 2-valver. In fact, it outperforms my "Junk Box 2" with its two type 30 triodes (detector plus a transformer-coupled stage of audio).

One reason for Trans-1's better performance is the higher gain available from a transistor, even a simple low-cost device like the BC549 which David used. A type 30 (1H4G) triode valve has a theoretical gain (μ) of 9.3 (less in practice) whereas the BC549 has a minimum hfe of 200. On this basis, it's not hard to see why the Trans-1 performs so well.

As set up in the regenerative receiver circuit (see Fig.1), the BC549 draws 2.5mA from a 9V battery. Using the 2-valver as a comparison again, the filaments draw 120mA at 2V, while the plates consume about 2mA from the 45V "B" battery.

Trans-1 can be used with either high-

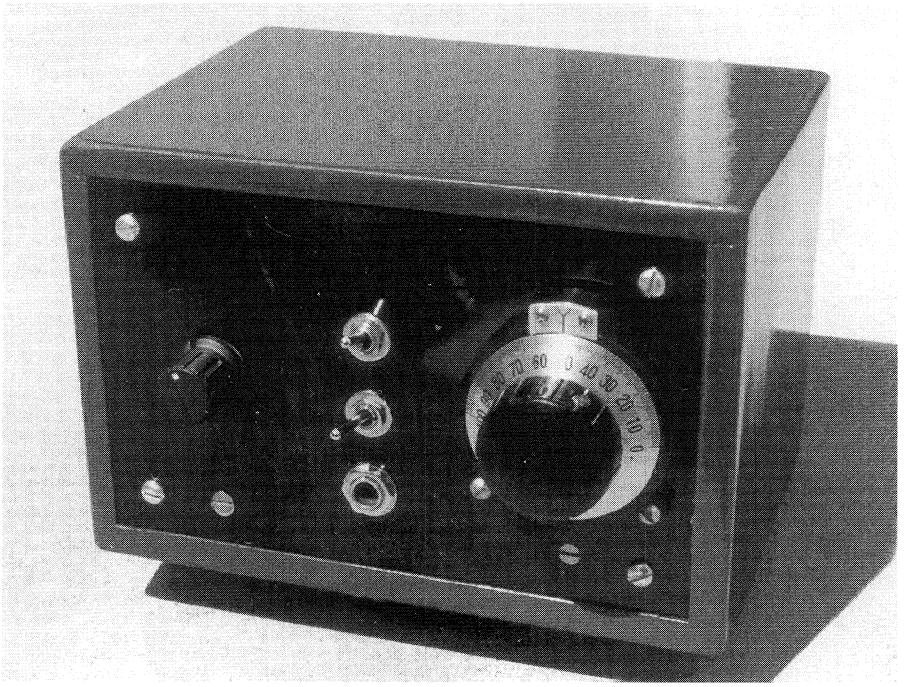

The author's Trans-1 was built into an existing timber cabinet that had previously housed other projects. The switches are for on/off and for selecting between the 5 and 10-turn taps for the transistor base connection.

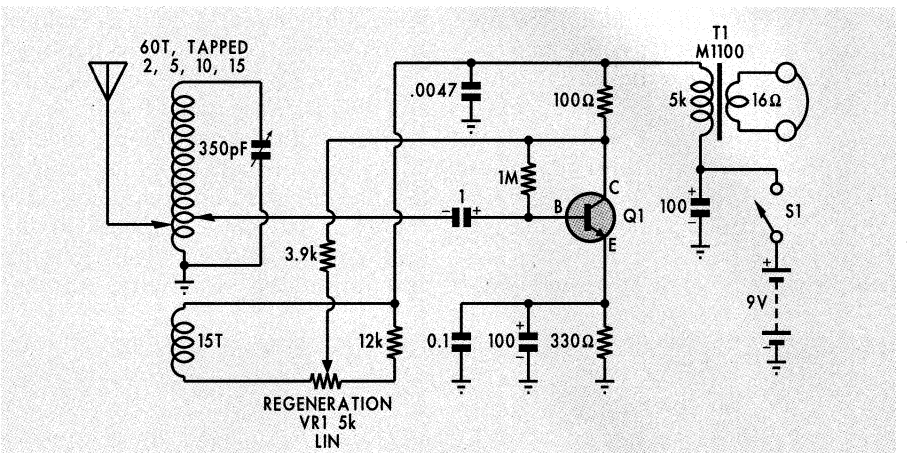

Fig.1: the circuit diagram for the Trans-1. Transistor Q1 acts as a detector and amplifier stage, while VR1 sets the amount of regeneration.

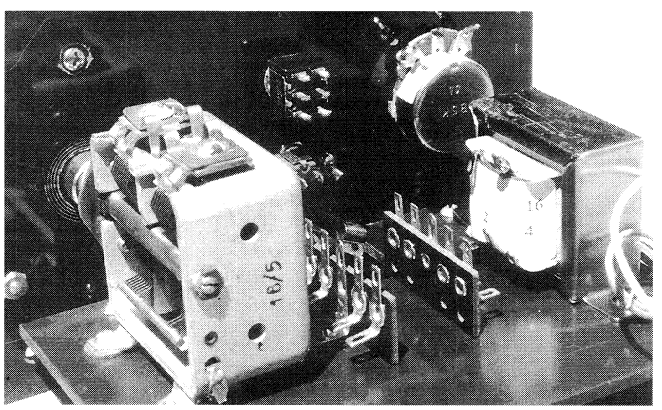

This rear view of the author's partially completed unit shows all the major components in place. Note the two tag strips for mounting the minor components.

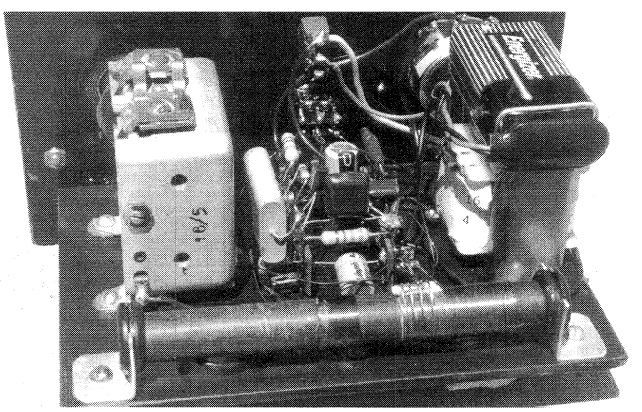

This is what the unit looks like with all the minor parts installed. A slightly larger cabinet would have made construction easier.

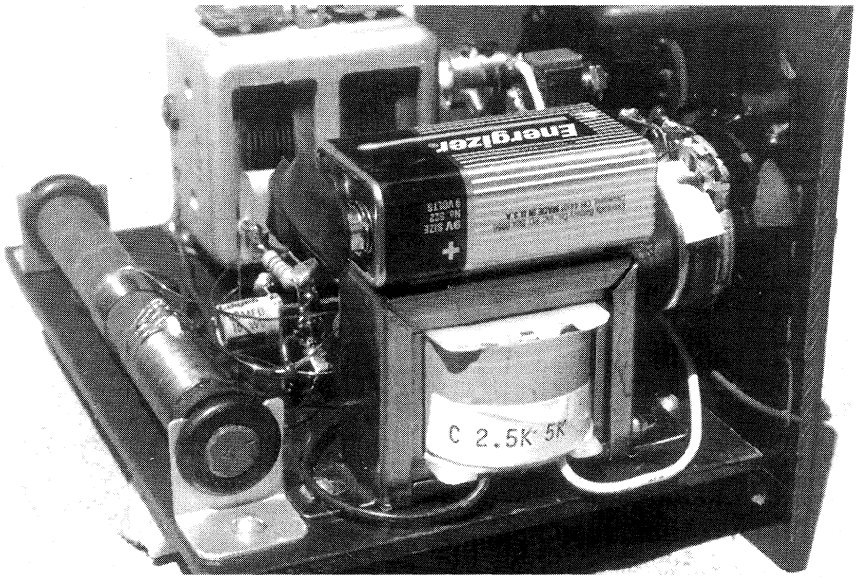

This end view shows the M1100 output transformer that's used to drive a pair of 8-ohm headphones. The 9V battery is attached to the top of the transformer using double-sided masking tape.

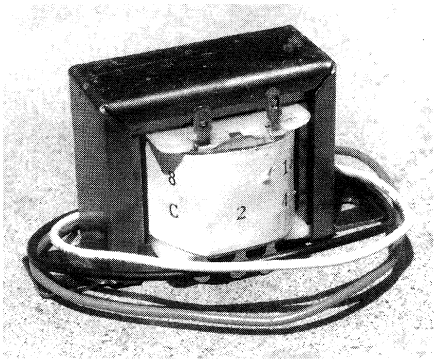

An output transformer must be used if low impedance headphones are to be used. Shown here is the M1100 audio line output transformer from Dick Smith Electronics.

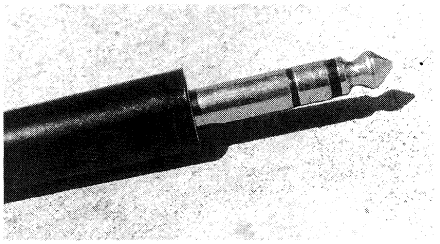

You can convert 8-ohm stereo headphones to 16-ohm mono by using the tip and ring connections only. This effectively connects the two 8-ohm earpieces in series but note that the they now operate in antiphase.

impedance headphones or can drive 8-ohm stereo headphones via an output transformer. The latter method is by far the better alternative when it comes to comfort and fidelity. A Dick Smith M1100 transformer or equivalent works reasonably well as an output transformer.

Practical details

David built his receiver on an aluminium chassis, whereas I built mine into an existing wooden box which had housed a few past projects. It doesn't matter how you build Trans-1; the result will be much the same.

However, one advantage of David's metal chassis construction is that it eliminates hand capacitance effects. The bakelite front panel on my set doesn't do this and hand capacitance can be noticeable when the receiver is tuned to weak stations which require maximum regeneration. But it's not much of a problem really.

The choice of components is not critical and if a constructor doesn't want to use a ferrite rod aerial, then he can do his own thing and wind a coil on a cardboard former. However, if a ferrite rod is not used, the coil winding information will differ considerably from that specified in the circuit. What's more, the small 350pF tuning capacitor shown on the circuit may have insufficient capacitance range if used with an air-cored coil. In the latter case, a 400-500pF tuning capacitor should be used if the whole of the broadcast band is to be covered.

It is interesting to note how few turns there are on the reaction coil, although the number can vary depending on where the transistor base connection is placed on the tuning coil. If the 10 or 15-turn taps are used, there will be sufficient regeneration. If the 5-turn tap is used there may not be enough regeneration at the low frequency end of the dial.

Increasing the value of the 100Ω resistor or decreasing the 3.9kΩ resistor will increase the regeneration response.

As the coil tap positions have a significant effect on the set's selectiv-

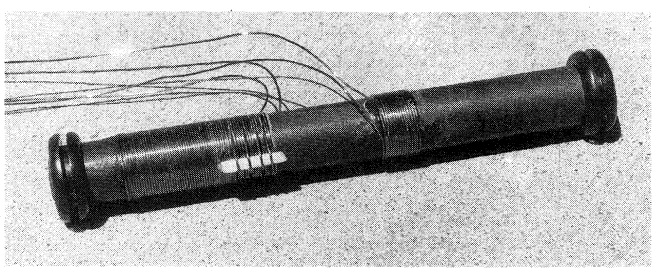

The ferrite rod antenna is easy to wind. The author used a length of fibre tubing on which to wind the coils. Rubber grommets hold the unit together and allow it to be mounted on right-angle brackets secured to the baseboard. The wire diameter is 0.4mm, the rod diameter is 10mm and the reaction coil can be placed 2-3cm away from the tuning coil (the exact location isn't critical).

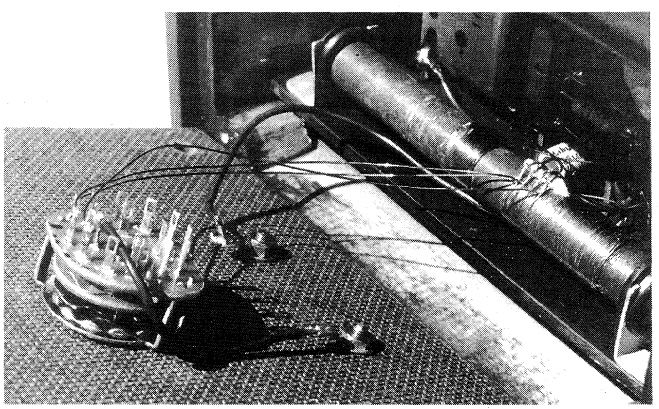

A rotary switch is used to select the desired antenna tap and is mounted on the rear panel.

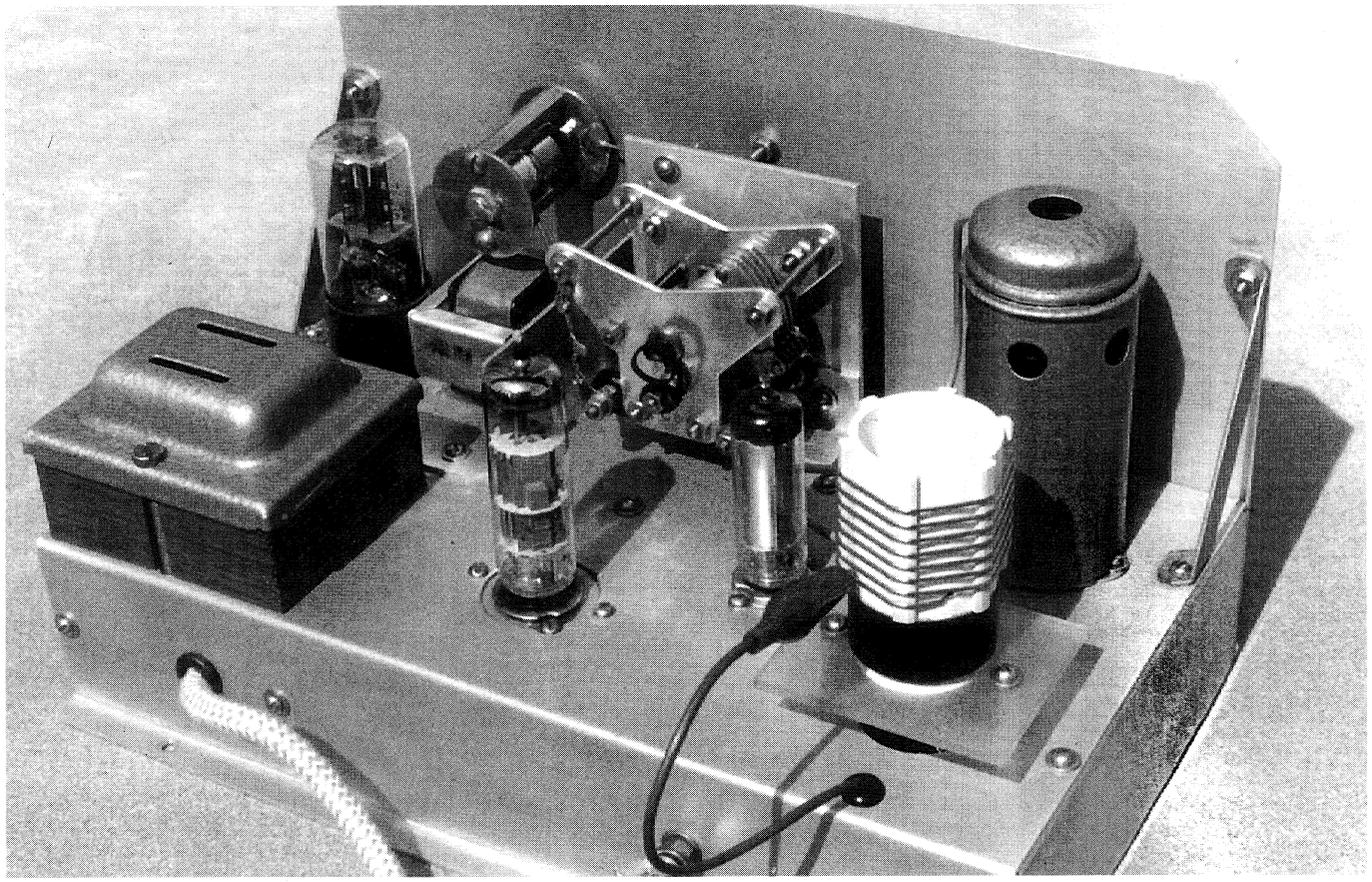

This photo shows one of David Waldron's mains-operated regenerative short-wave receivers. It drives a loudspeaker and is a good performer.

ity and regeneration response, there may be some need to experiment in this regard. It's all to do with the reception conditions the set has to work in. In some cases, a wave-trap may be used to advantage to block out a strong local station.

There is one aspect of Trans-1 that needs to be brought to the attention of would-be constructors and that is the capacitor that couples the radio frequency signal to the base of the transistor.

In the circuit diagram this capacitor is shown to have a value of 1µF or larger. This is important because a value less than 1µF has an adverse effect on tonal quality and will result in a thin, raspy, unpleasant sound. A small electrolytic will work OK in this position.

Switchable taps

My set differs from David's in that I prefer switchable taps to wandering leads and alligator clips.

On the back panel of my receiver there is a 3-position switch in the aerial circuit which connects the aerial to either tap 2, 5 or 15, the latter being used for short aerials. On the front panel, a 2-position switch connects the base of the transistor, via the 1µF capacitor, to either tap 5 or 10. Constructors can do their own thing regarding tap connections.

Building the Trans-1 is relatively straightforward and does not require detailed constructional information. The circuit diagram, a few hints, and the accompanying photographs should be sufficient.

In conclusion, the good aspects of Trans-1 are as follows: it is easy and relatively cheap to build; it can be built using mostly over-the-counter parts; it works well on local stations without an aerial or earth; it is neat and compact; and it operates from a single 9V battery.

The only unfavourable aspect is that sound fidelity is not quite as good as that from a similar valve receiver, particularly when receiving distant transmissions at maximum regeneration.

Although Trans-1 is based on modern components, the regeneration circuit on which it is based dates back to the early days of radio. It's just a new version of an old idea. **SC**