VINTAGE RADIO

By RODNEY CHAMPNESS, VK3UG

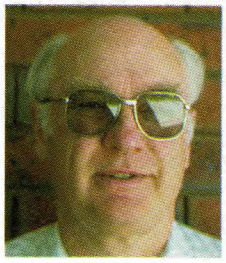

A battery eliminator, a servicing aid & getting the good oil

A battery eliminator is virtually a must if you want to run battery-powered vintage receivers. This month, we take a look at the Monarch battery eliminator, describe a simple servicing stand for record turntables and tell you where to look for information on vintage radio.

Almost from day one, battery eliminators were used to reduce the cost of running battery-powered radios. That's because portable radios were so convenient that they were often used in the home as well as outdoors, but the cost of running a set on batteries alone was prohibitive.

To overcome this problem, the radio manufacturers developed mains-powered battery "eliminators". The Monarch BLK battery eliminator of 1947 is one such device and was a big improvement on the designs used in the 1920s. Monarch equipment was made by Eclipse Radio and family resemblances to Peter Pan and Astor can be seen.

The Monarch's nominal output voltages suits sets using 1.4V valves with 90V high tension (HT). Physically, it is about twice the size of two 45V batteries and it has just one control – an on-off switch. The unit, in its original form, had a 4-core lead and an octal plug on the end of the lead so that it could plug into the sets that it was designed to power. I decided that

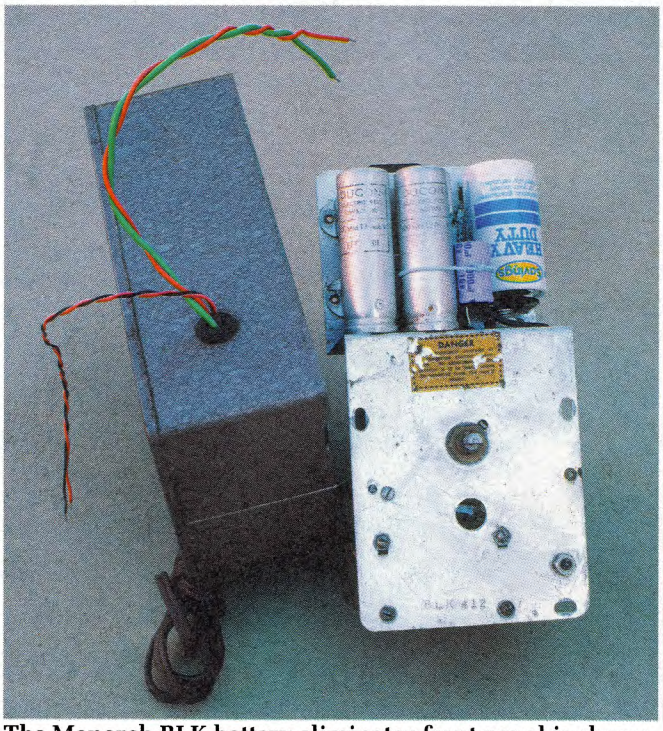

The Monarch BLK battery eliminator front panel is shown at left, while above shows the unit removed from the case. The D-size cell can be seen at top right and this functioned as a filter/regulator for the 1.4V rail.

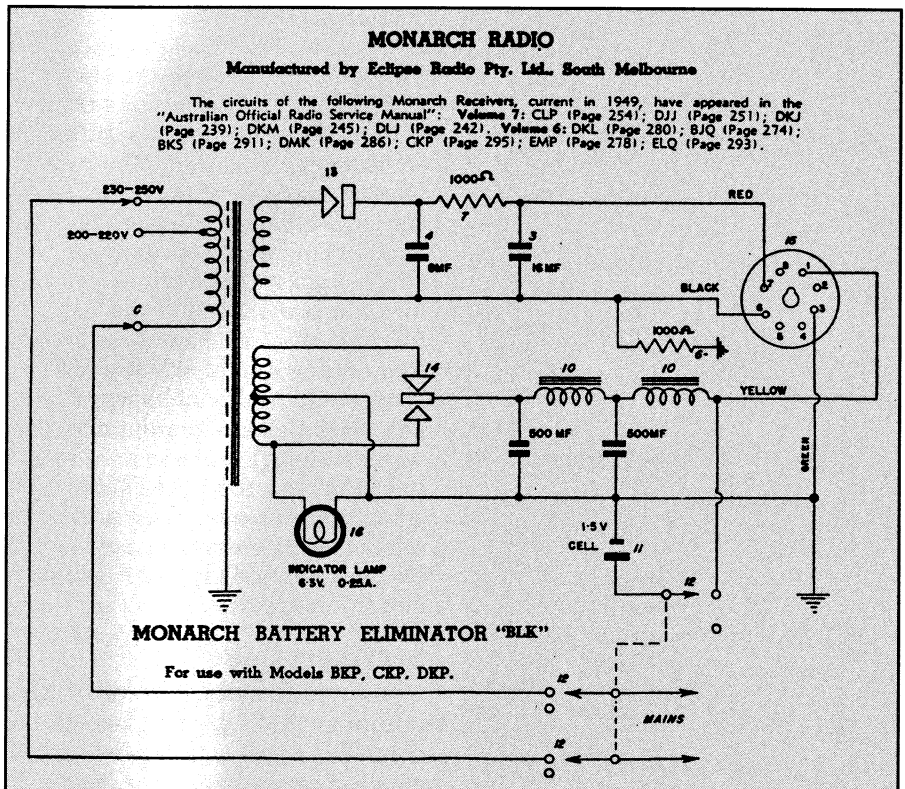

Fig.1: circuit diagram of Monarch BLK Battery Eliminator. It used a power transformer with two secondary windings, one for the 90V HT rail and the other for the 1.4V rail (to supply the valve filaments). Note the lack of a mains earth, even though the device was built into a metal case (see text).

I would use it as a general-purpose eliminator instead of one designed specifically for particular sets hence the unterminated wiring on the unit shown in the photos.

To dismantle it, the control knob is first removed and the front panel sprung to remove it. After that, it's simply a matter of undoing three screws so that the works can be removed from the case.

As can be seen from the circuit diagram (Fig.1), the unit is quite simple and so the restoration is also simple. There are two secondary windings on the transformer – a high-voltage winding to supply nominally 90V for the HT supply and a centre-tapped 6V (3V + 3V) winding to power the filaments and indicator lamp.

The high-voltage winding employs a half-wave dry metal "Westalite" rectifier. The HT is filtered in the normal way using two electrolytic capacitors and a 1kΩ resistor and this is quite effective. The actual HT voltage developed depends on the current drain. With no load, it is around 115V. The designed maximum current drain is 20mA.

It is much harder to filter and maintain a low tension rail of 1.4V, compared to a 90V rail. In this case, the CT transformer secondary winding drives a full-wave "Westalite" rectifier and this gives a no-load voltage of 4.1V which, if connected directly to the valve filaments, would blow them instantly.

So how did the manufacturers get the voltage down to 1.4V? Well, they did it in a couple of ways which, by today's standards, were rather crude. First, the voltage drop across the filter chokes at currents of 250-400mA reduced the output voltage to somewhere near 1.4V. However, with such a wide current variation available from the supply, the output voltage could still be much too high for the valve filaments and would burn them out.

This meant that the output voltage had to be regulated in some way and this was done by switching a 1.5V "D" cell across the output when the unit was turned on. As a result, the filament voltage is held within tolerance.

The cell also has another function – it acts as a large filter element so that the filament supply is very close to

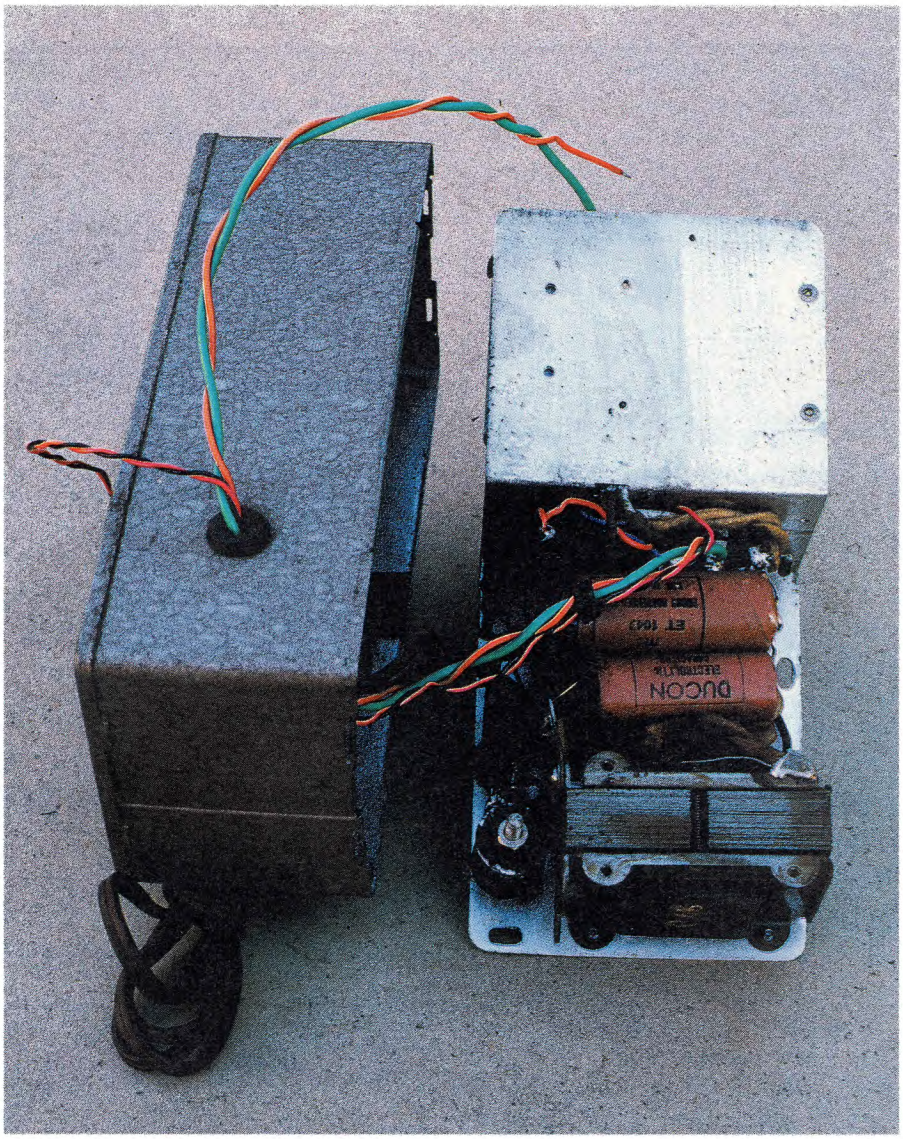

This is the underside view of the battery eliminator chassis. Note the knot in the mains cord to anchor it and the lack of earthing for the metal case (only a 2-wire mains cord was used) – two things that wouldn't pass muster nowadays. A correctly anchored 3-wire mains cord with the earth lead connected to chassis is the next step in the restoration process and will greatly improve safety.

pure DC. Monarch recommended that this "D" cell be replaced every 12 months.

If the unit hasn't been abused, all that will be necessary to do is check for hum on both the HT and LT supply lines. If a set connected to the supply hums, try replacing all the electrolytic capacitors with equivalent value units. In this unit, there are only four of them, so this is hardly an arduous exercise.

If you have a digital voltmeter, switch it to an AC range and, with a capacitor of around 0.47µF in series with one of its leads, connect it across each of the DC supply rails in turn. In each case, there should be no readings on the meter after the 0.47µF series capacitor has been charged. On the 1.4V line, even the 10V AC range of a conventional moving coil meter is unlikely to register any hum voltage unless the filtering is completely ineffective. A digital meter has more chance of indicating if any hum is present.

Electrical safety

And here a note about electrical safety. By today's standards, this device certainly wouldn't meet the safety requirements of electrical authorities. For starters, it was only fitted with a twin-core power cord which meant that the metal case wasn't earthed. Second, the power cord was "anchored" by tying a knot in it inside the case, so that is couldn't be pulled through the cord-entry grommet – a common technique in those days.

If you decide to restore this type of equipment, the mains cord should be replaced with a 3-wire type so that the metal case can be correctly earthed. In addition, the cord should be properly secured using an approved clamp or cordgrip grommet. If you have any doubts about what you are doing, seek advice from someone who's qualified.

In summary, this little unit is a simple but effective battery eliminator from the early post WWII era. These days, of course, much more effective and versatile battery eliminators can be built, which have precise regulation at several nominated output voltages. What's more, they will accurately maintain these output voltages over wide variations in the amount of current drawn.

Servicing stand

Last month, I described the restoration of an HMV Nippergram. In that column, I briefly mentioned that the changer mechanism was tested by mounting it on a "servicing board" (or stand) so let's now take a closer look at this simple yet invaluable servicing aid.

In order to check the operation of a record changer, it must be mounted horizontally and you must be able to view the mechanism underneath the frame while it is operating. This is not always easy to do and many's the time I've laid on the floor with a torch shining on the works in an attempt to see how it all worked.

This simple aid makes the job much easier. It consists of nothing more than several lengths of 9.5mm dowel and a 300 x 450mm piece of particle board (about 19mm thick) which is drilled to a grid pattern. The dowel pieces are "plugged" into appropriate locations on the board and used to support the turntable at several points as shown in one of the photos. This makes it easy to inspect the mechanism as the turntable operates.

If you want to make your own, drill the holes using a drill press (if possible) so that all they are perpendicular to the board. The holes are approximately 25 mm apart but don't be too pedantic about that, as variable spacing will help fit the dowel ends between components on the changer or an upturned receiver chassis.

Generally, four dowels will be enough to support any chassis or

changer. I have four 300mm dowels for observing what's going on with record changers and four 175mm dowels for mounting upturned receiver chassis. In fact, a variety of dowel lengths can be cut to suit whatever you are servicing/restoring. The 9.5mm dowels are quite rigid and I don't recommend using anything thinner as they can break too easily and your changer or receiver chassis could end up on the floor.

To stop the mounted unit from moving around, I fitted a 6mm rubber chair tip to one end of each dowel. This involved machining (or filing and sanding) one end of each dowel piece to 6mm but the result is worth it.

So there you have it – a simple low-cost device that will make servicing and restoring record changers just that bit easier.

This simple servicing stand is invaluable when it comes to checking record changers but is also useful when servicing radio receivers. It allows you to inspect the mechanism of a record changer while it is operating.

Getting the good oil

How do vintage radio buffs get into this rewarding pastime of restoring radio and television equipment and collecting the paraphernalia that goes with it, such as books, posters, magazines and the like?

My collecting started around 30 years ago. An advertisement appeared stating that a chap wanted to sell a military radio transceiver to someone who would restore it, before our radio history disappeared. That caught my attention, so I started collecting portable army transceivers from WWII.

That's how my collecting days started but how did yours? Perhaps this article is your first exposure to this interesting hobby. If you want to find out more, other magazines, both past and present, can be valuable sources of information.

New magazines

With the first burst of enthusiasm, it is likely that a new vintage radio enthusiast will grab just about anything on the subject and treat all that is said as gospel. Regrettably, some books and magazines are not really good sources of information and it is only when you become knowledgeable that you can sort the wheat from the chaff. It's a bit of a catch 22 situation, really.

Generally, American electronics/radio magazines don't offer a great deal for vintage radio enthusiasts in Australia and New Zealand. The main reason for this is that the American magazines cover 110V equipment and describe bits and pieces that are sometimes hard to obtain here.

However, the various vintage radio groups in America do have their own publications and some of these are quite good. Sometimes, these are available through the Historical Radio Society of Australia (HRSA) or the New Zealand Vintage Radio Society (NZVRS). In addition, the HRSA and the NZVRS have their own respective in-house magazines – "Radio Waves" and the "NZVRS Bulletin". These both concentrate heavily on vintage radio and are excellent for enthusiasts but you do have to be a member to obtain copies.

On a similar theme, some of the vintage radio clubs in Australia (and probably in New Zealand too) have in-house newsletters.

Old magazines

Old radio/wireless magazines make very interesting reading and will give you an excellent feel for vintage radio. If you can get them, copies of "Wireless Weekly", "Radio & Hobbies" and "Radio, Television & Hobbies" up to about 1965 are well worth collecting and reading.

Of these, "Radio & Hobbies" probably provides the most relevant information for vintage radio enthusiasts. It also featured "The Serviceman Who Tells" column, which discussed the faults found in radios (and later, TV sets) in the period from 1939. These columns make good reading and now provide practical restoration tips.

There were also many constructional articles, such as the "Little General" 4-valve radios, which I and many others found useful over the years.

Finally, old magazines are particularly interesting because they trace the evolution of radio month by month. A lot of good stuff can be gleaned from their pages. **SC**