VINTAGE RADIO

By RODNEY CHAMPNESS, VK3UG

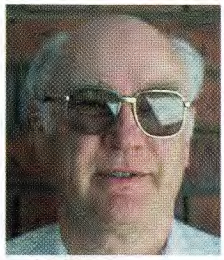

Choosing your test instruments; Pt.2

Last month in Pt.1, we looked at the most used and most common test instrument of all, the digital or analog multimeter. Most faults can be found with a multimeter but the performance of your restored radio can be considerably enhanced by the use of other test instruments.

The importance of test instruments to do the job can to a certain extent be dictated by your preferences and experience with various instruments. Generally, it is good to keep your test instruments as simple as possible and to the minimum number necessary to achieve a good result.

When I was younger and less experienced, my aim was to surround myself with as many instruments as I could afford to do the job. It gave me a feeling of importance and I also conned myself into believing that with a large selection of equipment I could find anything. However, things don't work out that way.

Not only is it desirable to have appropriate equipment, it is also necessary to know what you are looking for. In those earlier times, with only limited experience, I couldn't interpret the equipment readings or the effects of the instruments on the receiver under test. So at that time, the use of complex equipment would have been a waste of money.

RF signal generator

The two instruments that I use most today are a multimeter and an RF signal generator. I was asked by a vintage radio buff what he would use a signal generator for. He hadn't used one so naturally he was unsure of what it did and how it performed its functions.

A signal generator is very much like a miniature radio broadcast station. It is usually capable of being tuned to any frequency used by ordinary AM radio stations. It supplies a tone signal instead of voice or music, as this is easier to produce and makes it easier to gauge the performance of the radio it is attached to. It has adjustable signal level output so that it can take the place of a strong signal from a nearby station or even a weak, faraway station. It also has the advantage that it can be set to the intermediate frequency (IF) of almost any superhet radio a vintage buff is likely to see.

Having noted what a signal generator does, perhaps a few criteria for selecting a suitable signal generator can be listed:

- It may be powered from mains or batteries.
- Its radio frequency (RF) tuning range should extend from around 150kHz (the lowest IF that you are likely to see is 175kHz) to at least 30MHz when dual-wave or multi-band radios are being tested. If only broadcast band receivers are going to be tested, an upper frequency of 2MHz is all that is needed.
- It needs to have audio modulation either by a tone of 400Hz or 1000Hz, or both. If possible, the level of this tone should be adjustable and it needs to be able to be switched off.
- The audio tone should be available at the front panel and its level adjustable for testing the receiver's audio section.
- The radio frequency (RF) output level needs to be adjustable so that strong and weak signals can be simulated. This is an area that is often poorly achieved in cheap generators which are really just modulated oscillators. High-priced units have calibrated output levels so that the user can accurately determine the exact performance of their receiver.

You may have seen in some of my articles where I have quoted particular sensitivities like 10μV (microvolt), etc. This can only be done with instruments like the Hewlett Packard

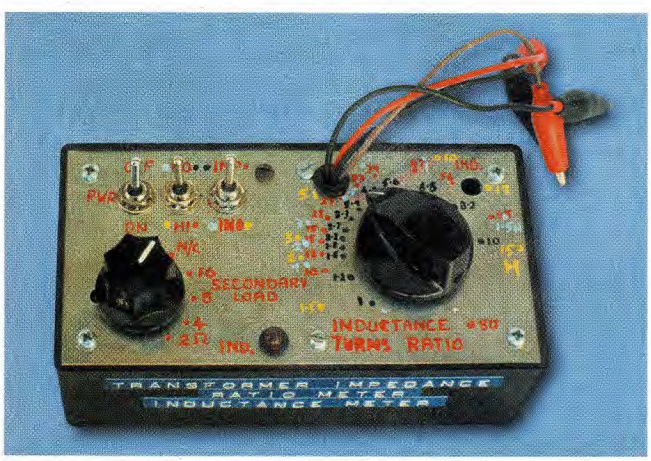

This home-made audio transformer tester enables transformers to be tested for short circuited windings and turns ratio.

This high voltage insulation tester was built from an Altronics kit and is used mainly for checking the insulation of transformers.

606B shown in one of the photographs.

This facility is not available on cheap instruments as it is costly to provide. Don't despair as it isn't essential, just nice to have when a particularly tricky fault is being traced.

- The tuning dial should be accurate enough for you to be confident that the calibrations are within a few kilohertz at the lower frequencies and perhaps within 100kHz on a range up around 30MHz. This isn't precision, because vintage receivers generally have rather vague dial markings up around those high frequencies anyway.
- The signal should not drift in frequency to any extent after an initial warm-up period. For example, if you were to tune to 3RN on 621kHz on your receiver and adjust the signal generator to exactly the same frequency, there would be no beat or whistle coming out of the receiver. If, after 10 minutes, this has changed so that there is a whistle of no more than around 1000Hz, the generator is drifting a little but is OK for most purposes.

If you have to retune the generator because there is a very high tone or it is almost out of audibility, the unit really has a little too much drift and it could be a nuisance when aligning the tuned circuits in a receiver. However, this is rarely a problem.

Having set down the criteria for a signal generator, the next question is "Where do you get them?" Until recently, Dick Smith Electronics had a good general-purpose RF signal generator which was quite suitable for the job. I cannot find any generators advertised in the general electronics magazines, so where and how can a vintage radio enthusiast get such a device?

Fortunately, there are quite a few signal generators for sale at amateur radio conventions/communications days and the like, and a quite reasonable Leader LSG10 or LSG11 (such as shown in one of the photographs) can be obtained at a reasonable cost. Amateur radio equipment has become so sophisticated that generators of this standard have become of little use to amateurs.

There are of course other brands available such as Advance and Taylor in the general-purpose range and both manufacturers produced good equipment. Units like the Hewlett Packard 606B are excellent and sometimes appear on the disposals market. They are magnificent pieces of equipment but be aware some of the parts may be a hard to source if they become faulty.

Is there any other way of obtaining a signal generator? Yes, some of the old modulated oscillators that are collected by vintage radio buffs can be restored and used for their original purpose. Additionally, it is possible to build your own. Admittedly there are few designs around but back several years ago, ETI and EA did have some designs. I'm personally looking at building a relatively simple generator but it will be some time before it becomes a reality.

High voltage tester

Testing the insulation quality of power transformers, capacitors, RF transformers and other devices that rely on the integrity of insulation is important in getting the best out of a restored vintage radio. I have often laboured the point of testing the insulation of power transformers, between windings and windings to earth. It is very much a safety issue. I make no apology for this. The unit shown in the photograph is a device built from a kit put out by Altronics.

I believe that it is no longer available but a replacement kit also sold by Altronics (K2557) has been available for as low as $45. It is a SILICON CHIP design featured in May 1996 and is more versatile than the model I have.

Signal injector

This is a very simple little device that is suitable for testing valve and transistor radio equipment. It is a signal generator that puts out a basic audio frequency of 1kHz or thereabouts and harmonics of 1kHz well up into the tuning ranges of domestic radios.

It consists of a pair of transistors in a multivibrator oscillator circuit. It generates square waves at the basic frequency of 1kHz (nominally) and these are applied through a probe to RF, IF and audio circuits throughout a receiver, often pinpointing the stage with the problems.

In a set that is performing properly, applying the probe to the aerial terminal will produce a loud tone at the receiver output. By the time the probe is applied to the plate of the IF valve, the output level will be noticeably

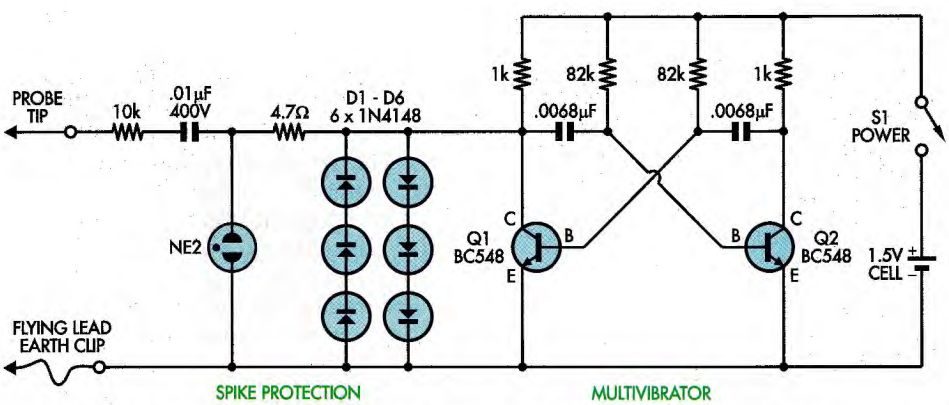

Fig.1: this transistor multivibrator is powered from a single 1.5V cell. It produces a 1kHz square signal which can be used as an audio signal while its higher harmonics can be used well up into the broadcast AM band.

lower than when it was applied to the aerial, as there is no radio frequency gain after the plate of the IF valve. Placed on the detector, a loud tone should again be heard which is controlled by the volume control, and the level will reduce as the probe is attached to audio stages nearer to the speaker.

While it is a very useful little instrument, misleading results can occur due to signals getting into stages that they were not intended to get into. However, Fig.1 shows a typical circuit for readers who wish to make one. They have to be tiny. An old marker pen can be used to house it and an AAA cell, or you could use a torch shell suited for AA cells. It's tiny so a small circuit board or matrix board is needed to build it on. Some clues on construction can be obtained from the articles in the December 2000 and May 2001 issues of SILICON CHIP, on LED torches.

One precaution necessary with the signal injector is to make sure that the transistors do not receive pulses from the circuit being tested that exceed their breakdown voltage.

For example, when the earth lead is connected to the chassis and the probe is touched on the HT line, a pulse will be sent through the probe's injection capacitor (as it charges) to the collector of transistor Q1. This will exceed the breakdown voltage of the transistor and destroy it. To overcome this problem, a neon (NE2) and two strings of diodes are used to clamp this pulse to a level that will not harm the transistor.

In some circumstances, the earth lead is not needed and hand capacity is sufficient to act as an earth. Experimentation and experience will soon show you the best way to use the injector. Try it out on a few good sets first.

Signal tracers

Just as we can inject signals into a radio and assess the results, it is quite practical to do the reverse. We can listen to the signal as it progresses through a radio with a device called a

Photo Gallery: Peter Pan FJJ

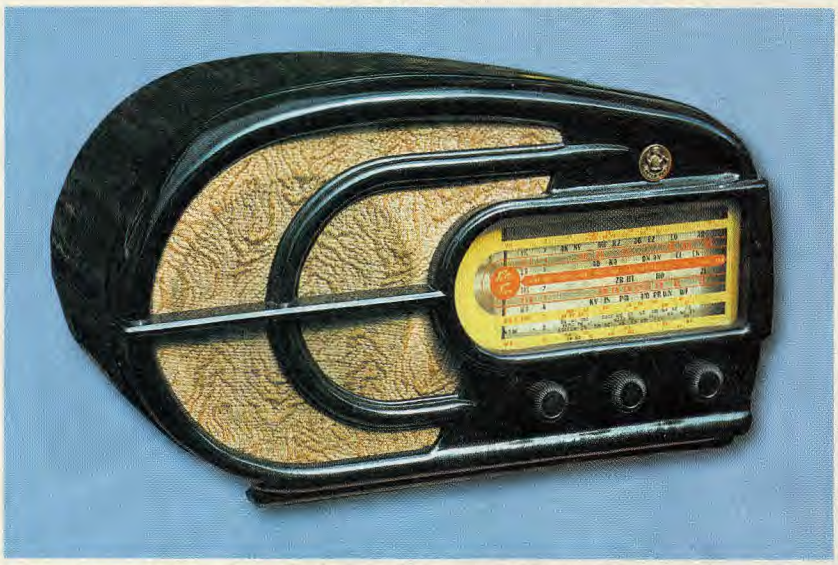

Manufactured by Eclipse Radio, Melbourne, in 1949, the Peter Pan FJJ is a 4-valve superhet receiver employing virtually identical circuitry to a number of companion "Astor" models of the day. Housed in a substantial Bakelite cabinet and fitted with a 6-inch speaker, the Peter Pan FFJ was capable of good RF and audio performance.

Above: if you are going to do alignment work on vintage radios, you do need a good RF signal generator, such as this Hewlett Packard model 606B which has the advantage of a calibrated output attenuator and output metering.

Left: while many vintage radio enthusiasts would probably like to have a valve tester, this AVO MkIII Valve Characteristic Meter (Mutual Conductance Valve Tester) is really only likely to be used by someone is who designing valve circuits.

"Radio & Hobbies" magazine described the Senior Signal Tracer in May and June 1954. It is essentially a tuneable superhet radio.

Left: somewhat cheaper than the HP unit and with a good deal fewer facilities, the Leader LSG11 Signal Generator is a good instrument for vintage radio enthusiasts.

signal tracer. For example, a signal tracer can have its probe attached to the aerial terminal of a set and signals listened to at that point. Depending on the type of tracer, one or many signals (usually weak) may be heard as they don't usually have the performance of the receiver.

At the grid of the first valve, hopefully only one signal is heard, being the one the set is tuned to. In the grid or plate circuit of the IF stage, the signal will be much louder in the tracer's output. At the detector there is a choice of listening for RF or AF signals. Following the detector, the audio signal will get louder as each stage is probed with the tracer.

There are two types of signal tracer. There was an untuned type described in SILICON CHIP for June 1997 (errata on this appeared in the August issue). These units are cheap and work quite satisfactorily in tracing run of the mill faults. They are switchable from RF to AF tracing and have gain controls.

To use them, it is only a matter of putting the probe onto various signal points throughout the receiver and it will soon be obvious at which stage the signal disappears or becomes weaker instead of stronger. It is then a matter of testing that section of the set in depth to locate the fault.

A tuned signal tracer is more versatile and more expensive. In effect, a tuned signal tracer is a special superhet or TRF receiver, with attenuators to cut the gain of various stages so that it is not overloaded. It also usually has a meter to show the strength of signals as they are traced through the receiver. As the name suggests, it can tune to any of the frequencies that the set tunes to as well as the intermediate frequency (IF).

In addition, it can detect the oscillation from the local oscillator, usually without even touching any part of the oscillator circuit – just as long as the probe is near the circuit. It will also assist in determining if the oscillator is tuned to the correct frequency.

I haven't seen any of these available ready made or in kit format for many a long year. Occasionally a vintage signal tracer shows up in a collector's display. The one featured in a photograph is a *Radio & Hobbies* design from the mid 1950s. It works extremely well, being more versatile than the untuned version. A solid state version would be a much better device for today I'm sure. Regrettably the market for such an instrument is so small that it would be up to individual collectors with time on their hands to design and build such a unit.

Transformer tester

I purchased a quantity of unmarked audio output transformers. I really wasn't looking forward to laboriously testing each one with a haywire system. It would take me ages to test them all, so I did some lateral thinking and came up with a simple device which will do all the testing I needed. It will determine the turns ratio and by looking up a table, the likely impedance ratio. The inductance of the high-impedance winding and the approximate efficiency of the transformer can also be obtained on other ranges.

It uses just one quad operational amplifier IC and cost around $20 for bits. I can now test all the parameters listed above in around a minute per transformer. It is a bench instrument with an accuracy of around 10%; quite adequate for the job it is intended to do.

Oscilloscope

This is the device to use to find that really elusive fault. It can be used to measure voltages, particularly AC voltages, and is useful for looking at signal waveforms at various points throughout the circuit to determine if there is anything unusual that a multimeter cannot detect. Such things as supersonic oscillations in audio stages come to mind here. Some of these nasties occur only on audio peaks, for instance.

If you can afford it, a CRO is often well worth the money. They are excellent instruments but one that the average vintage radio restorer may turn on only once a year – just to see if it

works or to look at the pretty patterns!

Valve testers

These instruments were all the go years ago, particularly the emission testers. In reality, I found it was just as easy and usually more accurate to try a replacement valve rather than test the one from the set. They have their place but the average restorer will find little use for one.

However, if a restorer is into design work as well, the purchase of a mutual conductance valve tester will be money well spent. From the variety of readings that such an instrument can give, a very high performance piece of equipment can be designed. They are cumbersome and slow to use, and like their simpler cousins, not something most restorers would consider important to have.

Test methods

Often a fault is more readily diagnosed when replacement parts are tried in a receiver.

The most obvious and easiest to try is a replacement valve – as long as you have one of the same type, known to be good, or you can obtain one at a good price or on a loan basis. Only do this after you have determined with the multimeter that all is well as far as supply voltages are concerned. Valves at times can appear OK as far as static measurements with a multimeter are concerned but may still not work, so a replacement often cures a tricky problem. TV servicemen in the black and white days often carried a stock of known good valves to try in place of suspect valves. It saved a lot of mucking around (although it did lead to some of them being called "valve jockeys").

Strange crackles and distortion in the audio can often be cured by trying another speaker transformer and speaker on a trial basis. In the 40s and 50s, it was possible to buy a universal speaker test set. It had a multi-impedance speaker transformer which matched impedances from around 2.5kΩ ohms up to around 15kΩ, with several low impedance taps so that the various speaker impedances could be matched. It also had a choke and resistor arrangement that could match most speaker field coils.

This was a handy device in its day but is hardly necessary to deal with the occasional restoration.

Photo Gallery: Mastertone 5-Valve Superhet

Made by Burnell of Perth, the Mastertone 5-valve superhet receiver used the following valve types: EK2-G frequency changer; 6D6 IF amplifier, 75 1st audio/ detector/AVC rectifier; 6F6-G output and 5Y3-G rectifier.

A spare receiver can also be used to test the local oscillator in a receiver. To conduct this test, tune another receiver to a weak station near 1000-1600kHz, with its aerial lead close to the set under test. Then slowly tune the set being tested from the 530kHz end up to around 1200kHz.

As you tune the set under test, at some point a high-pitched whistle will be heard which drops to a low pitch as you continue to slowly tune the set. It should then disappear as tuning is continued, then increase to a high pitch and finally disappear from the test receiver. If the whistle is heard, the oscillator is operating.

Going further than this by trying various replacement parts is neither quick nor effective and is not to be recommended. Get help from someone who has more experience than you have – it will save a lot of time.

Summary

So there you are, a run-down on test instruments from the essential down to the "nice to have, but don't think I'll bother" types. My order of importance, but not necessarily yours, is:

(1). Digital Multimeter (and an Analog Multimeter);
(2). RF Signal Generator;
(3). High Voltage Insulation Tester;
(4). Signal Tracer – preferably a tuned type;
(5). Signal Injector;
(6). Oscilloscope;
(7). Valve Tester – Mutual Conductance type.

Finally, while I did list the transformer tester in this article, it may not be a device that many would need, although I find it handy. **SC**

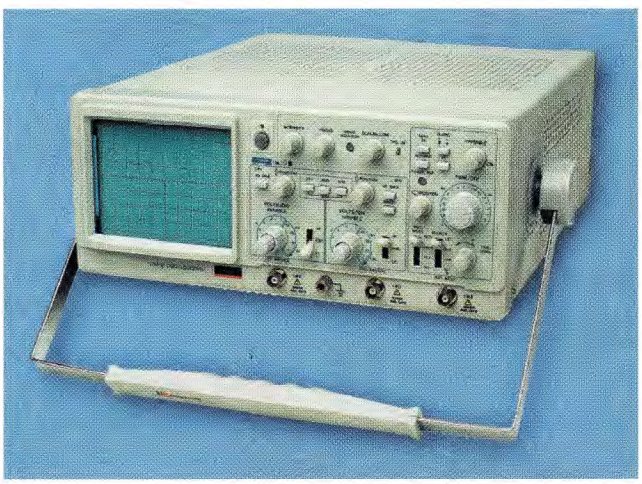

If you can afford an oscilloscope for your vintage radio work, this 2-channel 20MHz Hung Chang model from Jaycar is more than adequate for the job. (Photo from Jaycar).