VINTAGE RADIO

By RODNEY CHAMPNESS, VK3UG

Philips Philetta & the Titan Tiny

This month, we publish a few more details on the intriguing Philips Philetta and take a close look at the Titan Tiny. The latter is a compact, hot-chassis set and is a real death-trap for the unwary.

The article on the Philips Philetta in the November 2000 issue sparked quite a bit of interest. In that article, I mentioned that I had not seen the circuit of this intriguing little set and Ross Paton of Auckland, New Zealand kindly sent a copy of the circuit and much of the technical data as originally supplied by Philips. The circuit diagram covers both the B3D32A and B3D33A models – the only apparent difference is the cabinet style.

It is interesting to see how the set achieved its various functions. As it turned out, my "guestimations" on how the set was engineered were quite close to the mark. It still pays to be cautious when making assumptions, though. For example, a number of radio manufacturers built generic sets for other companies. However, with a little experience, even an unlabelled set can often be identified – whether by the type of cabinet housing the set or how the chassis is wired or labelled.

Getting back to the Philetta, Ross reports that this set is typical of the many small table radios made by Philips from the late 1950s through into the 1960s. In fact, many were brought to Australia and New Zealand during this period by migrants.

According to Ross, the ECC85/6AQ8 RF amplifier valve is not particularly reliable in this set, as the valve is run with no high-tension voltage for lengthy periods when FM is not being received. This causes the cathode to become poisoned. If the 6AQ8 is unavailable, the 6BQ7A/ECC180 is worth considering as a replacement. It is pin-for-pin compatible but its inter-electrode capacitance is different and this upsets the alignment which has to be tweaked.

The various functions in the set are achieved by a large number of switch contacts and it is not a circuit that you can find your way around easily. On the other hand, it showed how a good-quality European set was put together.

The Titan Tiny was a basic compact 4-valve receiver designed for the bottom end of the market. It was housed in a white bakelite cabinet and has just two controls: a handspan tuning knob and a combined on-off/volume control.

The Titan Tiny

Now we go from discussing a well-designed and reasonably sophisticated receiver to a set that was designed for the bottom end of the market.

I was visiting Brian Lackie at Urunga on the north coast of NSW some time back and he showed me an intriguing little set called the Titan "Tiny" – and "tiny" it is. This set has yet to be restored, as can be seen from the various photographs. The front view shows a very plain small white Bakelite cabinet, with what appears to be a direct drive tuning control and an on/off switch/volume control (with its

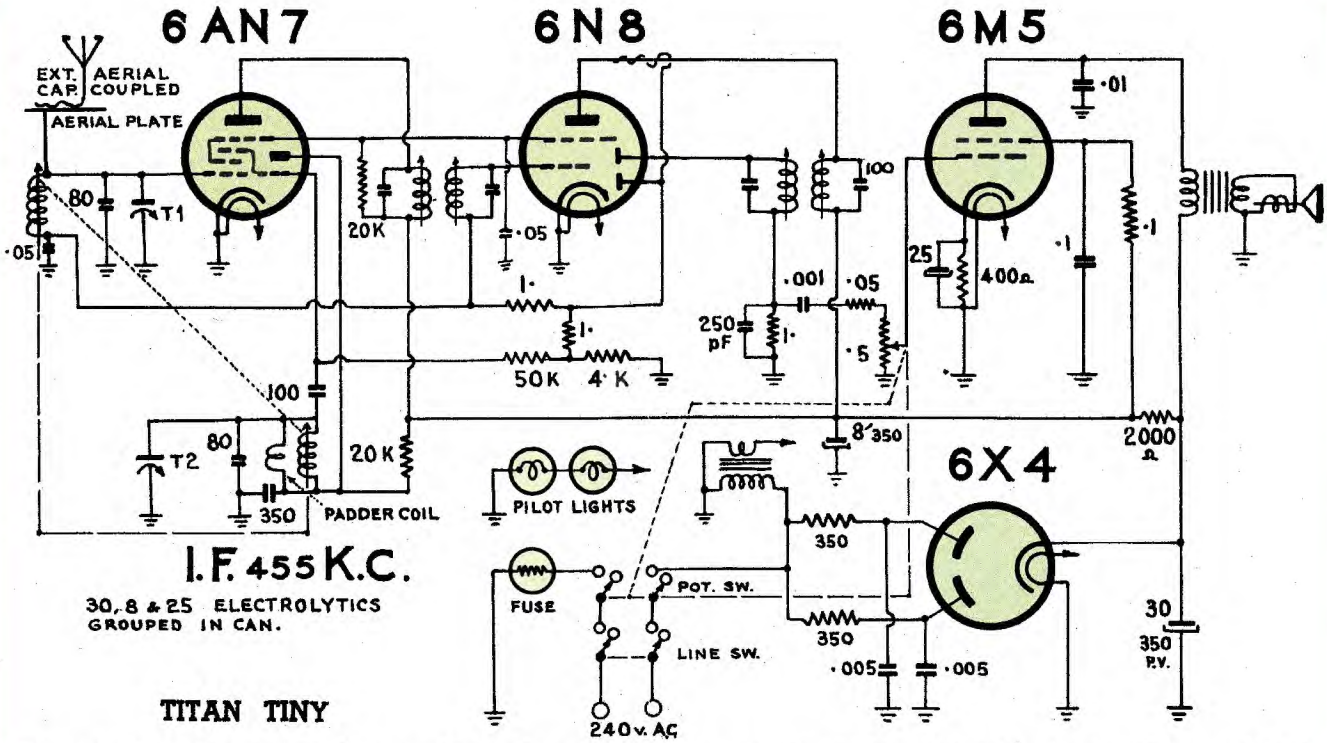

Fig.1: the Titan Tiny is a 4-valve superhet design with inductance tuning. This is a "hot-chassis" set with one side of the mains directly connected to chassis (via a fuse) and the other side connected to chassis via a transformer winding. Hot-chassis sets are real deathtraps, since the metal chassis (and anything connected to it) can operate at 240VAC.

knob missing) underneath. The tuning control is quite small, so tuning the set with its "hand span" type dial is a little tricky.

The rear view of the set reveals a tightly-packed chassis. However, there is sufficient room to remove and replace the valves if necessary. The rear view also shows that the cabinet has a series of "slits" (near the power transformer) – these ensure that there is enough airflow to keep the temperature inside the set at a reasonable level.

Also shown are the four mounting screw-holes (one in each corner) that are used to secure the back of the set. This particular set is missing its back cover and that's an extremely serious safety issue, as will be explained later.

What intrigued me was the size of the set and this can be gauged by comparing the chassis size with a ballpoint pen (see photo). However, despite its small size and the number of components used, the chassis isn't too crowded and this makes it relatively easy to service.

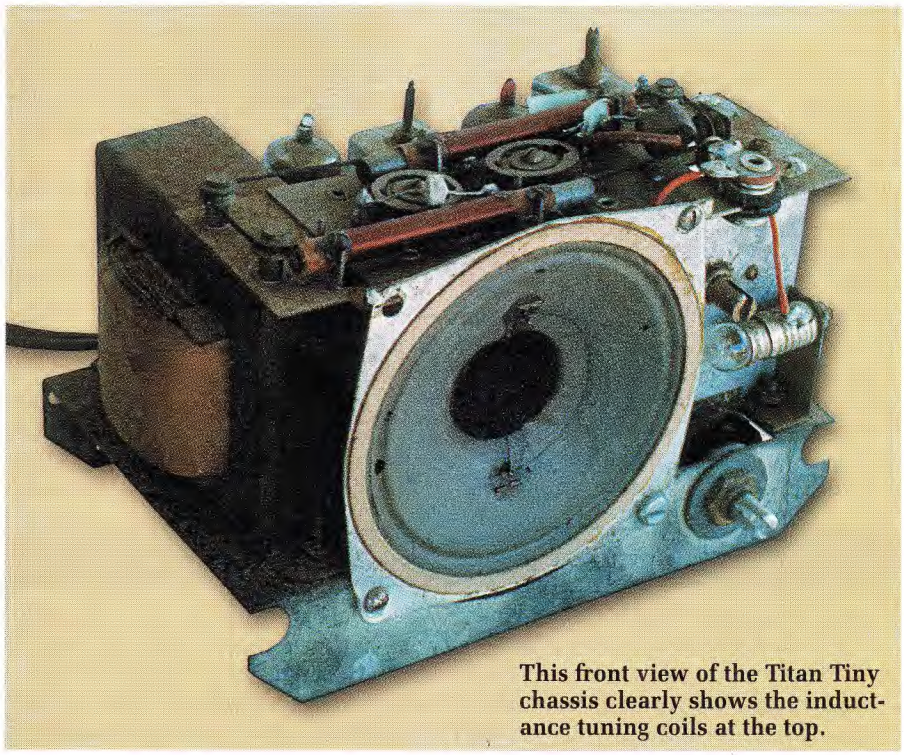

This front view of the Titan Tiny chassis clearly shows the inductance tuning coils at the top.

Circuit details

Fig.1 shows the circuit details of the Titan Tiny. It's a conventional superhet which uses a 6AN7 converter, a 6N8 IF amplifier and detector, and a 6M5 audio stage. The HT is rectified by the ubiquitous 6X4.

At a quick glance, the converter stage appears normal and apparently uses capacitive tuning. However, close inspection reveals that this is not true.

Photo Gallery: AWA Radiola 80 TRF Receiver

Manufactured by AWA in Sydney in 1930, the Radiola 80 featured a "coffin top" style cabinet and a matching loudspeaker in a separate cabinet. This set is a 6-valve TRF receiver and employed the following valve line-up: 3 x type 22 (1st RF amplifier, 2nd RF amplifier & detector), 2 x L410 (1st and 2nd audio) and P410 (audio output). (Photo and information courtesy Historical Radio Society of Australia).

T1 and T2 are not tuning capacitors but are instead high-frequency (1600kHz) trimmers for the aerial and oscillator tuned circuits. However, the circuit symbols used here are for a normal tuning gang and would fool anyone who casually glanced at the circuit (other Titan circuits use recognised symbols for trimmer capacitors).

Actually, this set is inductance tuned by sliding iron-dust cores inside the aerial and oscillator coils. If you carefully examine the photographs of the chassis, you can see the dial cord mechanism that's used for sliding the cores in and out.

Dial cord

Behind the tuning knob, the dial cord is attached to a shaft in much the same way as in many Astor sets. One end then comes up to the top of the set and does a right angle turn around a dial cord pulley so that it runs parallel to a horizontal metal plate. As it progresses across the plate, an iron-dust core is attached to it at a strategic point and this is then threaded through one of the coils. The cord then continues around another two pulleys and then traverses back across the plate and through the second coil (via another iron-dust core).

Finally, the cord goes over another pulley and disappears down to the other side of the dial drive mechanism.

It is a very simple version of the Astor tuning system but I don't believe it is as good. Some other sets, such as the Barlow Wadley XCR30, also used ferrite or iron-dust cores attached to a dial cord for tuning. However, the Barlow Wadley uses just one core, a cam switch and three coils in line to tune the RF stage from 0.5-30MHz with 300° of control rotation. There is certainly nothing wrong with inductance tuning but getting it just right can sometimes be a problem.

Adjusting the two tuned circuits does not appear to be a particularly easy job in the Titan Tiny. Theoretically, it would be possible to shift a slug along the dial cord or to shift the actual location of the coil for best alignment of the circuit. However, it appears to me that it was a once in a lifetime alignment job although a determined restorer should be able to wring the last little bit of performance out of the set.

Padder coil

Most vintage radio restorers have become used to padders being either fixed or adjustable capacitors of around 400-450pF. There is no such thing in this set. If you believe the circuit notations implicitly, it has a padder coil across the oscillator coil. So how does this work?

The inductance of the oscillator coil is less than the aerial coil in most domestic receivers. In this set, however, it appears that the oscillator and aerial coils are the same – both electrically and physically. By paralleling another inductance, the effective inductance of the oscillator coil is reduced to a value equivalent to what other sets use in this position. It also includes a conventional 350pF padder capacitor as well.

The aerial coil has a capacitor to couple it to the aerial proper. This is a low value "gimmick" capacitor, which ensures that the aerial does not load the aerial tuned circuit to any degree.

This receiver also includes bias and delayed AGC for the 6AN7 and 6N8 valves. This bias (about 0.8V) and de-

WARNING!

The **Titan Tiny** set featured in this article is a hot-chassis set, with one side of the 240VAC mains directly connected to chassis via a fuse and the other side connected to chassis via a transformer winding. **This means that the metal chassis itself and any parts connected to it could easily be operating at 240V AC and this applies even if the fuse (which is actually a dial lamp) blows.**

Under no circumstances should any part of a hot-chassis set be touched while it is plugged into the mains. Hot-chassis sets are extremely dangerous and should be left strictly alone unless you are very experienced and know exactly what you are doing.

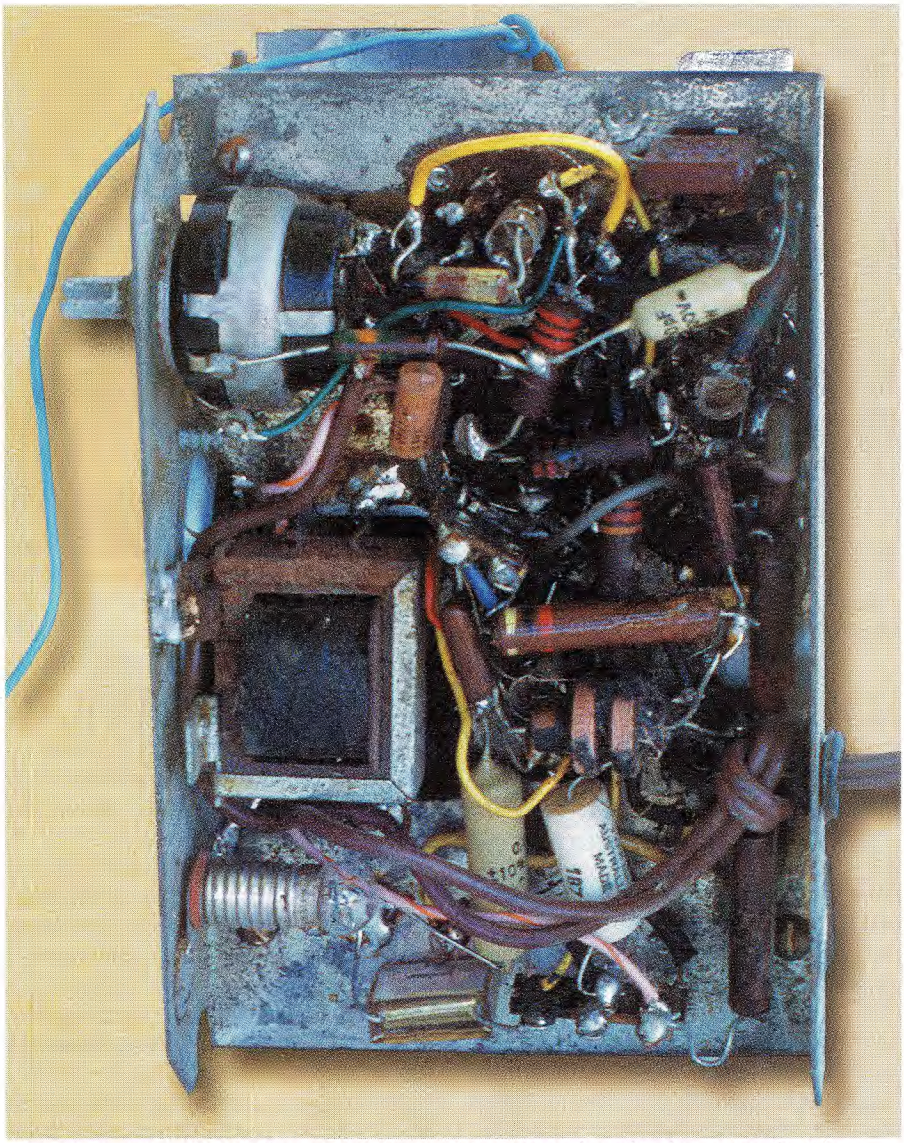

The parts were all tightly packed in, as this under-chassis view reveals. The lamp in the bottom lefthand corner served as the mains fuse – crude and potentially lethal for the inexperienced serviceman!

layed AGC is provided by a voltage divider consisting of 50kΩ and 4kΩ resistors from the oscillator's grid.

The audio output stage is a little strange in that the screen of the 6M5 appears to be operating almost in a starvation mode. Most receivers have the screen coming directly off the HT line at the junction of the 2kΩ resistor and the HT supply to the receiver RF stages.

A real deathtrap

We now come to the power supply. At first glance, and without the benefit of a circuit diagram, the Titan Tiny appears to be a conventional mains-operated set with a power transformer. Brian initially thought so and so did I but to Brian's dismay, the mains appeared to have a short to the chassis. As a result, Brian cut the power lead off so that a deadly mistake wasn't made later on when he was endeavouring to restore the set.

Some time later, however, the circuit turned up in the AORSM Manual No.11 (1952) and this showed that **the set is a "hot chassis" type.** So how come it's got a power transformer in it?

Yes, it does have a transformer in it but it is still hot-chassis. In this set, the transformer only supplies the valve filaments and dial lamps. The HT is achieved by wiring the 6X4 as a half-wave rectifier, with one side of the mains connected to the plates via two 350Ω resistors (these limit the peak rectifier current through the 6X4). In addition, a .005μF capacitor (mains rated) is fitted to each plate to suppress interference on the mains.

The Neutral (hopefully) side of the mains goes to the chassis via a fuse, which is actually another dial lamp.

We now return to the missing back on this set. **Without a back, this set would be lethal if it's the mains Active (and not the Neutral) that's connected directly via the fuse to the chassis. In other words, the chassis and much of the circuitry – including the dial lamps – would all be at 240VAC!**

It all depends on which way around the mains is connected.

But here's the rub – **this set is still dangerous even if it's the Neutral that's connected to the chassis via the fuse.** As shown on the circuit, the Active is connected to the chassis via the power transformer's primary. This means that if the fuse blows, the chassis will be at nearly 240V!

If that happens, you yourself could act as the fuse and have nearly 240V placed across your body if you touched the chassis and anything else that is earthed. What a lovely death trap!

Back in the 1950s and earlier, the

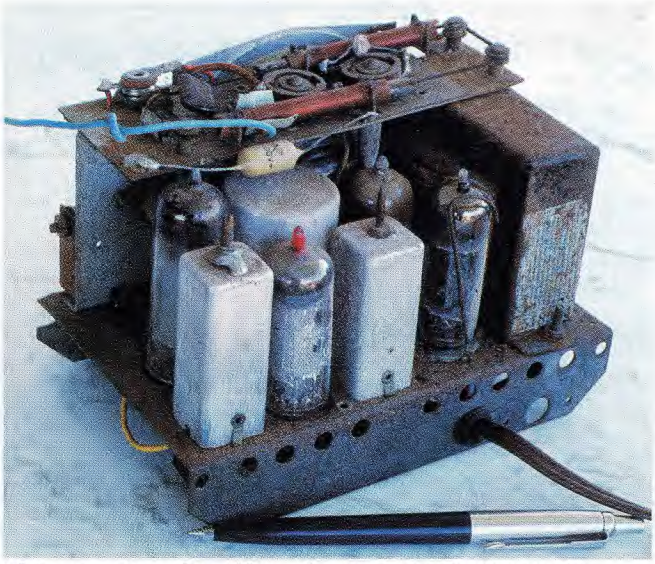

This rear view shows how the major parts fit into the space. The dial-cord is connected to tuning slugs which slide backwards and forwards inside the tuning coils.

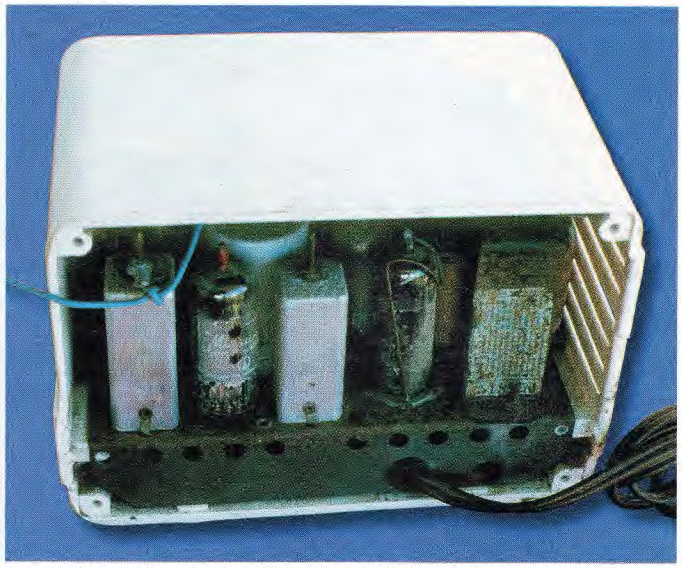

A vital part is missing from this Titan Tiny and that's the back. During operation, the chassis could be at 240V AC and that make it potentially lethal.

safety of the user was not considered as important as it is now. To make matters worse, the knob was missing from the volume control on this set and the metal shaft was protruding through the cabinet. Later sets used recessed metal or plastic shafts so that the possibility of an electric shock or worse was eliminated.

I don't know what sort of back was originally attached to this set but I suspect that it was probably a thick cardboard type with perforations for ventilation. The circuit shows a line switch but Brian's set has no such line switch. Perhaps it was removed at some time in the past, when the back was lost?

Restoring the set

This little set isn't up and running yet. It has obviously been serviced in the past, as some of the parts have been replaced with newer components. And with the replacement of a few critical components, there is no reason why this set should not perform quite reasonably.

Tuning of the IF stages should not be a drama but the front-end circuits may prove a bit of a challenge. The Titan Tiny was obviously designed for the lower end of the market, with a simple box-shaped cabinet, a tiny dial scale and no outstanding features to get excited about. But as a kitchen set in a metropolitan setting, it would have been quite adequate.

The biggest black mark against it is the fact that it is a hot-chassis set. This makes it a real deathtrap for the inexperienced serviceman – anyone touching the bare metal chassis or any other parts could easily be touching the mains Active, even if the fuse has blown!

Hot-chassis sets need to be designed with great care if they are to be safe for use by the general public. Some manufacturers were quite conscientious in their endeavours to make their sets safe but others made apparently little effort by today's standards.

Warning label

Would I be pleased to have one of these sets in my collection? Yes, I would – not because I think it's marvellous but because it's an example of a very simple little set that achieves some things in interesting ways.

I would restore it and make it as safe as I could and plaster a big label on the back warning that it is a hot-chassis set. And I would run it through a 1:1 ratio isolation transformer as an additional precaution.

Finally, my thanks to the reader who pointed out the correct spelling for "mantel" in Mailbag for November 2001. Yes, mantel radios were designed to sit on a mantelpiece. **SC**

Photo Gallery: Healing Model 24 TRF Receiver

The Healing Model 24 is a small wooden 3-valve receiver manufactured by A. G. Healing in 1934. The set uses the following valves: 57 detector, 2A5 output and 80 rectifier. (Photo and information courtesy of Historical Radio Society of Australia).