VINTAGE RADIO

By RODNEY CHAMPNESS, VK3UG

The AWA 719C Console; Pt.1

During the 1940s, AWA produced some very impressive sets and some of the best were the 7-band radio receivers. The first models were produced in the early 40s but arguably the best were produced after World War II.

An overview of the various 7-band models was given in the May 2001 issue. In this article, we'll take a close look at one of the magnificent console models, the 719C, and the work involved in restoring it to its former glory.

This particular set had had a rough life. It's obviously had rodents as house guests at some stage and there had also been considerable cabinet damage due to moisture and exposure to the elements.

With care and patience, it has now been fully restored as shown in the accompanying photographs. Now I have to admit that I didn't do all the work – although I am quite happy when it comes to restoring the electronic circuitry, I am no expert at quality cabinet restoration. So, once I'd removed the chassis and loudspeaker and dial, the cabinet was passed on to a friend, Laurie Tilley, whose woodworking ability far surpasses mine.

Removing the parts

Removing the chassis from the cabinet is a tricky job as the dial-scale/band indicator is attached to the cabinet itself and not to the chassis as in most sets. This little design quirk leads to other problems, as will be explained next month in Pt.2 of this article.

It is first necessary to unclamp the dial pointer from the dial-cord and remove the band-change indicator cable. If this isn't done, it's possible to damage the dial-drive system. Next, the extension shafts that go through the right side of the cabinet and attach to the band-change and tuning control shafts are removed. The dial-lamp cable and the speaker cable are then unplugged, after which the three knobs on the front panel are removed, followed by the four bolts securing the chassis.

Because I wasn't restoring the cabinet myself, I also removed the loudspeaker and baffle-board from the lower section of the cabinet. The baffle-board is held in place with six wood screws, together with large felt washers and sleeves. These help prevent cabinet vibrations which could affect the stability of the local oscillator in the front end of the receiver.

The dial-scale assembly was removed by undoing the four screws situated at the corners of the assembly. It was then carefully placed to one side, so that it would not get broken. The whole procedure sounds complicated but it isn't – just time consuming.

The big clean up

The next task was to thoroughly clean the chassis. As mentioned earlier, rodents had made their presence felt but fortunately, the damage was only cosmetic on the outside of the chassis and there was no damage to the components. Although the exterior is now clean, areas of rust and other corrosion are evident and do detract from the appearance.

As can be appreciated, completely dismantling a set of this complexity to fully restore the chassis is not something to undertake lightly. Nor were the owners keen to spend the extra money needed to return the chassis to

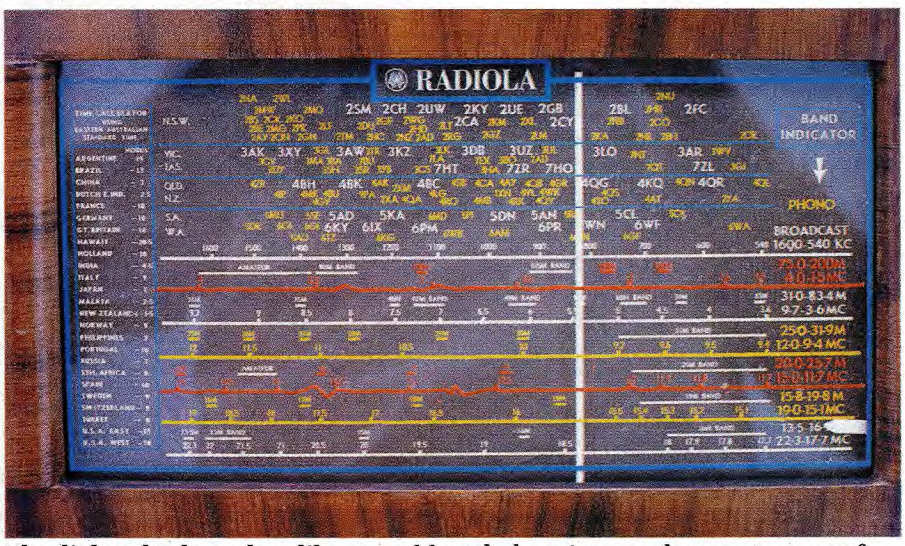

The dial-scale cleaned up like new although there is some damage to some of the markings for the shortwave bands.

pristine condition.

The 50 years of felt-like dust that had accumulated at the front of the speaker was removed. It is amazing how much dust can accumulate in a spot that is largely "covered" and is due to the loose weave used in speaker cloth.

At this stage, I lubricated all the moving surfaces with light sewing-machine oil. These parts included the control shafts, dial pulleys, switches and the dial pointer slide. Many of them had become difficult to operate due to gumming up and the ingress of dust. All now operate quite smoothly.

Next, the dial-scale was carefully washed and the dial-pointer repainted white. Before washing the dial-scale though, I tried washing a small section of the print in an inconspicuous spot, to make sure it wouldn't come off. In this case, the print remained in place – unlike some I've tested where the dial markings are starting to fall off without even touching them.

My advice is to be very careful when cleaning dial-scales on the side where the print is. If just dusting cleans a dial-scale sufficiently, don't do any more as dial-scales are hard to replace.

Unfortunately, the dial-scale on this set does have some damage on the shortwave bands, as is evident from the photograph. This damage was present before any work was done on the dial and is not due to cleaning.

Apart from this, the dial-scale came up like new. The same goes for the valves, which were also removed and cleaned with soapy water. When cleaning octal valves like this, the trick is to keep the them upside down – that way, the glass envelope can be cleaned without water getting into the base.

Make sure that the type numbers don't get rubbed off during this process – clean the valves gently. Clean valves really do look nice when reinstalled in the chassis.

First looks

Before really starting a circuit restoration, I like to have a good look at the set to see what needs attention. It is best to determine early whether there are likely to be any faults that are expensive to correct, such as a burnt-out power transformer or any other obviously distressed components. In this set, some work had been done in the past to replace the original electrolytic capacitors (the old ones had been left in-situ but disconnected from the circuit).

The AWA 7-banders are extremely good performers and have an impressive cabinet. In this case, the cabinet came up looking like new.

I find that a headset magnifier is quite an asset when checking into the works of a set as complex as a 7-band AWA receiver. They sell for around $30, while an illuminated magnifier is also available at over $100. I prefer the headset magnifier. as it is easy to move around the chassis, and use a lead light of some sort to illuminate the area of interest.

Getting back to the set, most of the black "moulded mud" paper capacitors appeared to be in remarkably good condition. Conversely, some of the wiring looked a bit the worse for wear, having perished over the last 50 years, and this included the high-tension wiring and AC input wires to the power transformer. In fact, the transformer would definitely need attention before any power was applied to the set.

Both the mains cord and plug had been replaced at some time but neither was in good order. What's more, the PVC twin flex cord used was not in keeping with the vintage of the receiver.

Overhauling the circuitry

The first item to receive attention was the power transformer. I began by using my 1000V insulation tester to check the integrity of the insulation between the mains input and earth and to the other windings. The secondary HT winding was also checked by removing its centre-tap from earth and then testing to earth. The resistance in each half of the winding was also checked using an ohmmeter and they were both the same.

Having done those tests to prove that the transformer itself was in good order, it was time to replace the perished wiring. First, the terminal location of each wire emerging from the front (or chassis) side of the transformer was noted on a piece of paper, along with the colour of each wire.

This done, I removed the two mounting bolts from the front of the transformer and the two bolts which

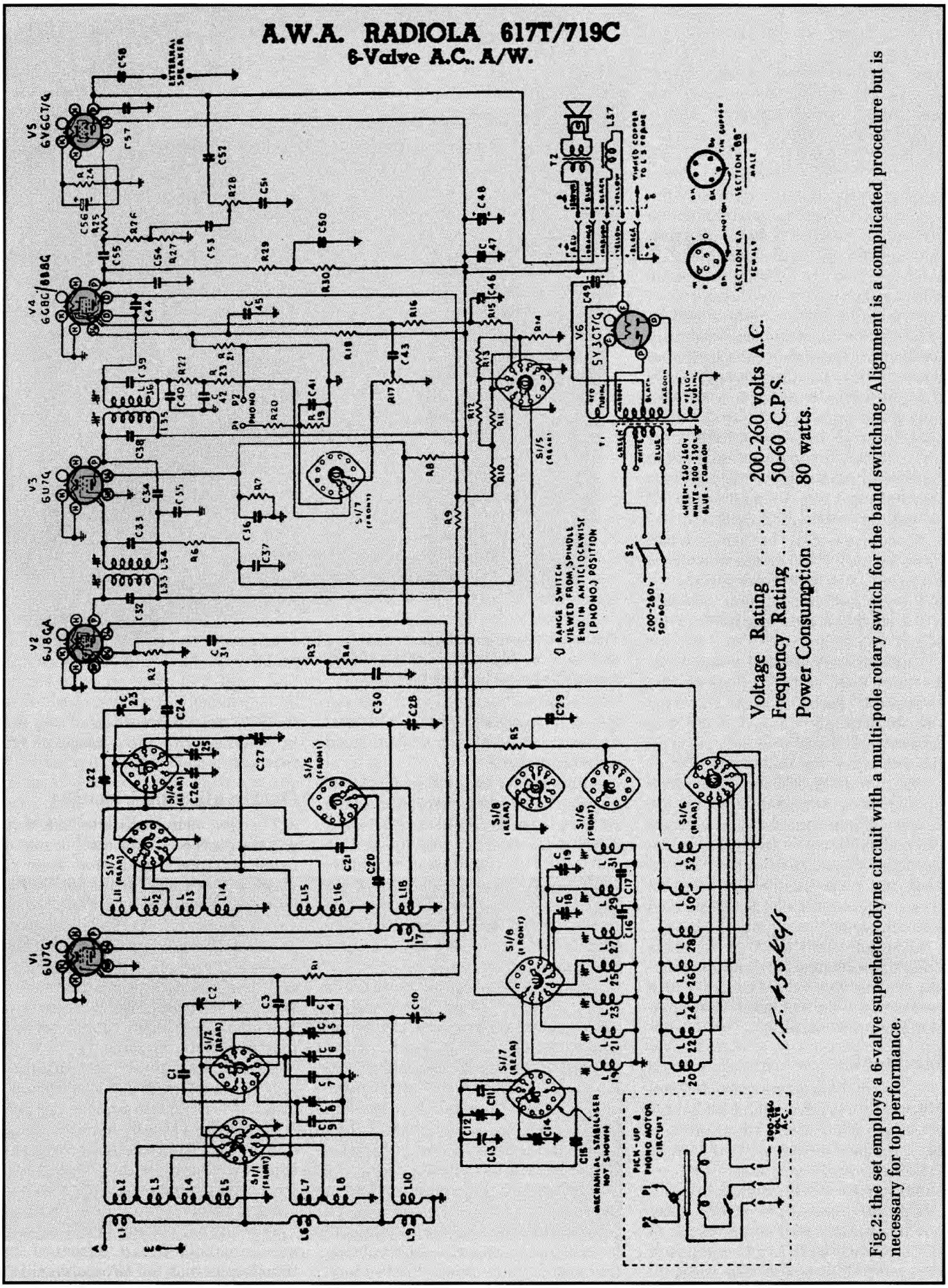

Fig.2: the set employs a 6-valve superheterodyne circuit with a multi-pole rotary switch for the band switching. Alignment is a complicated procedure but is necessary for top performance.

There's plenty of room in the back of the cabinet for the chassis. The loudspeaker fits in the cabinet immediately beneath the chassis shelf and is just visible at the bottom of the picture.

clamp the transformer together, without removing the transformer from the chassis. The front covering plate was then removed so that the high-voltage wiring was exposed. Each wire was then individually removed from its termination and replaced so that no wiring errors could occur. The transformer was then reassembled.

The next step was to replace the leaky paper capacitors. As mentioned earlier, most of the black "moulded mud" paper capacitors were quite OK when tested with the high-voltage tester. However, some had previously been replaced with Ducon capacitors which had now gone leaky and these were all changed.

The resistors were all within tolerance and none required replacement.

Mains cord

As mentioned earlier, the mains cord fitted was not in keeping with sets of this vintage. As a result, I decided to fit a new 3-core brown fabric-covered mains lead, which would be similar to the style of lead originally fitted. The mains plug was in poor condition and so this too was replaced. I used a modern plastic plug and although it doesn't have a vintage appearance, it is safe.

The chassis-entry grommet for the mains lead had perished, so this too was replaced. In addition, the lead was securely clamped to the chassis – it's no longer permissible to tie a knot in the power lead after it enters the chassis, as was common some 50 years ago.

As a further safety measure, the earth lead of the power cord was soldered to a lug which was securely bolted to the chassis. As originally manufactured, this set didn't have an earth wire in the mains lead and the chassis wasn't earthed.

The dial cord was also the worse for wear, so a new cord was fitted. Fig.1 shows how this is done. The original 1mm-diameter (approx.) dial cord required two turns around the dial driveshaft to ensure an effective grip. However, I generally use 0.7mm cord so I put three turns on the dial driveshaft just to make sure.

This works well and the dial mechanism is much freer than on many sets I've come across. It even has a flywheel on the drive shaft so that the set can be rapidly tuned from one end of the dial to the other.

A number of the insulated wires within the set had perished, so these were replaced one at a time. Finally, a check was made with an ohmmeter to verify that there were no short circuits, particularly on the HT line. This all checked out, so it was time to start the testing procedure.

Firing the set up

Power was initially applied to the set with all the valves removed. The AC voltages out of the secondary of the transformer were then checked and found to be a little high. This was to be expected because, with the rectifier valve removed, there is no load on the transformer. I let the set run like this for about 30 minutes and the transformer stayed cool, indicating that it was in good order.

The set was then turned off, the rectifier and speaker plugged in, and the mains switched on again. The HT rose to nearly 500V, which is normal with no load in these receivers. The set was then switched off after a few seconds and the electrolytics allowed to discharge.

This was done several times to "form" the electrolytic capacitors and they remained cool during this procedure. The time taken to discharge increased with each on/off cycle, indicating that the capacitors had "formed". Being relatively modern capacitors, they appeared to be quite OK right from the word go.

By the way, it's always a good idea to go through this routine as the electrolytic capacitors may be badly in need of "forming". If the HT is simply applied and left on, the capacitors may overheat and explode. They may also cause the rectifier to be severely overloaded. However, short term overloads rarely cause a problem and the capacitors will usually quickly "reform".

At this stage, all the valves were replaced in their sockets and the set again turned on. A quick check with the multimeter revealed that all voltages were nominally correct. However, after some time, the HT decreased due to the fact that the 5Y3GT rectifier had come to the end of its useful life. A replacement valve soon fixed that problem.

Next, an aerial and earth were con-

Photo Gallery: Tasma Model 22

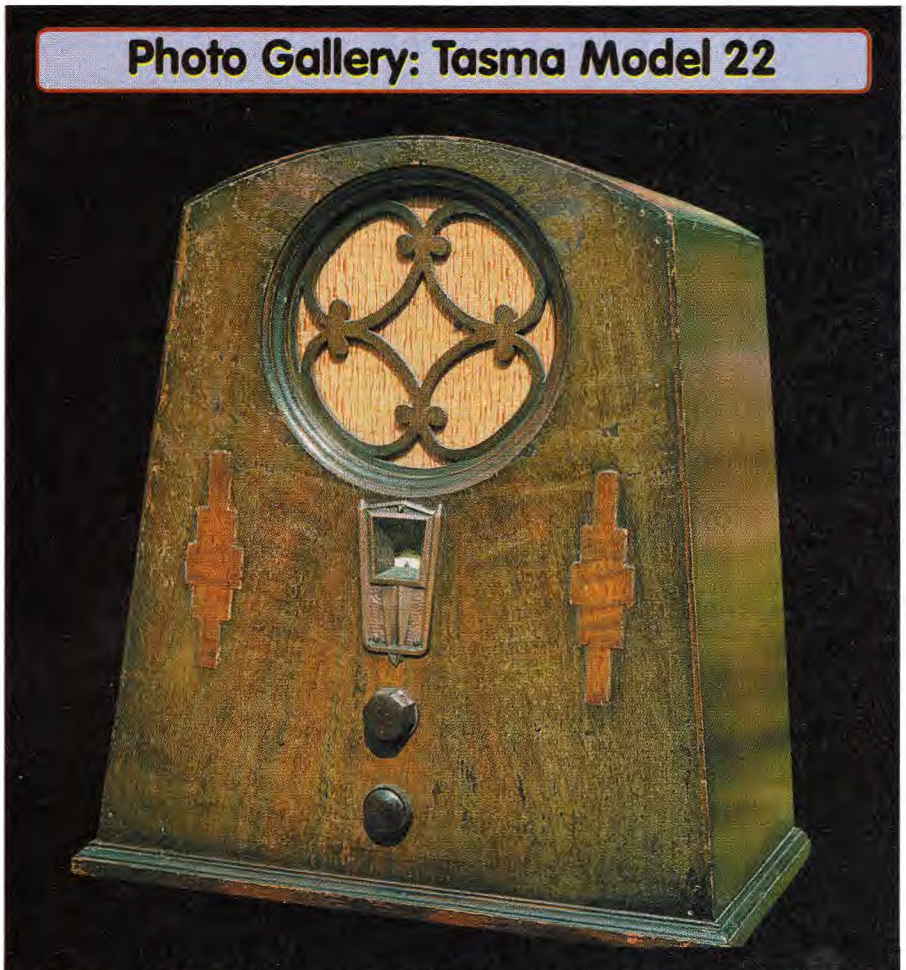

The Tasma Model 22, manufactured by Thom & Smith, Sydney, in 1931 is a 3-valve TRF receiver. It used the following valves: 224 detector, 247 output and 280 rectifier. (Photo and information courtesy of Historical Radio Society of Australia).

nected to the receiver, as it was time to tune around and see whether the set was in working order. I switched to the broadcast band and found a number of stations. 3GG on 531 kHz is a good test where I live, being a 5kW station with a directional antenna some 200km away. If the signal is loud and clear from this station, I know that the set being tested is in good order.

Crook grommets

There was one problem – the tuning gang mounting grommets had perished and so the gang wobbled around. Unfortunately, unless the coil sub-assembly is dismantled (a major job), it isn't possible to directly replace the grommets.

To get around this problem, I began by cleaning all the hardened rubber out from around the two mounts near the dial drum. I then slit a gang-mounting grommet through its slot, so that I ended up with two rubber washers. These were then cut so that they could be opened out and slipped around the metal gang mounting posts near the dial drum

A small screwdriver to was used push each half-grommet under each flat near the metal mounting posts. They were then secured in place by applying some glue to their outside edges and the chassis. Each half-grommet now provides some support for the gang and there is some give on the mount.

Alignment

Alignment is quite a task with the AWA "seven-banders" and the 719C is no exception. In fact, I gather that most owners of these sets tend to shy away from aligning them and I can't say I blame them.

That said, they are excellent sets and it really is well worthwhile going through the alignment procedure, to get the best out of them. I'll walk you through the alignment steps in detail next month.

Assembling the receiver

While I'd been solving the circuit problems, Laurie Tilley had been restoring the cabinet as near as practical to its original condition. It looks good, as the photograph shows, and the owners are happy with the their family heirloom.

Once the cabinet had been returned, the speaker and baffle were replaced and the six 50mm mounting screws (along with the felt washers and sleeves) were installed to hold the baffle in place. It really is quite an elaborate system to ensure that baffle vibrations are not transferred to the oscillator tuning components and thus cause instability.

The dial-scale and then the chassis were also refitted to the cabinet. The dial-scale has four small screws and the chassis has four larger metal thread bolts holding it to the cabinet shelf. The dial-scale clamp was then reattached to the dial cord and the band-change bowden cable was reattached to the band-change drum.

The position of the bowden cable within its clamp allows for some adjustment of the band indicator behind the dial glass. Finally, the extension shafts for the band-change and tuning controls were installed, the knobs fitted and the loudspeaker reconnected.

I timed myself doing this job and it takes almost 30 minutes. This included adjusting the dial pointer position and the band-change indicator. As a matter of interest, I later tested myself on a much simpler Precedent mantel set and it took me just 60 seconds to do what had taken half an hour on the AWA set!

Disaster strikes

Once the assembly had been completed, the set was given a final performance check to make sure everything was OK. The clamp on the dial-cord was then adjusted so that the stations appeared in their correct positions on the dial.

By this stage, the set was going nicely and I was admiring the cabinet and its performance when it suddenly stopped working. So what had gone wrong?

The grid of the first audio stage (6G8G) comes out to a top cap and so, using a time-honoured technique, I touched it with my finger – all I heard was a thin squeak rather than the expected healthy "blurt". I tried another 6V6GT audio output valve but it made no difference. And that meant that the set had to be dismantled again, so that I could find out where the fault was.

Once I had it dismantled, I tested around the audio section and found no problems. Then a small sliver of wire fell out of the wiring – a leftover from a snipped component lead. Perhaps it was this that was causing the problem but, despite shorting various sections, I couldn't reproduce the symptoms originally observed.

In the end, I concluded that this had to be the answer so the set was reassembled. It worked well for a while – then stopped again. I advanced the volume control and the set suddenly burst into life. This is usually a sign of a bad connection somewhere, either a dry joint or a corroded or poor joint inside a component. At least I was starting to narrow down the source of the problem.

It was time to get serious about finding the problem. Often, with intermittent faults, the best approach is to connect the appropriate test equipment and then just wait for the fault to show. In this case, I connected my DMM (set to the 400V range) to the plate of the 6G8G, to measure the plate volts under normal and fault conditions. I also connected an audio signal tracer to the grid of the 6V6GT to see if audio was getting this far without trouble. Note: for safety reasons, it is necessary to switch the set off when changing the test instrument test points.

Next, I adjusted the volume controls (at low level) on both the set and the signal tracer for the same volume. After a while the set went quiet but the test instruments showed no change.

I then connected the DMM to the plate of the 6V6GT and connected the signal tracer to the same spot. When the fault reappeared, the plate circuit of the 6V6GT was still operating correctly, with both the voltage and the audio the same as before the fault.

I then moved the speaker and the fault came and went (this had had no effect previously). Careful inspection using the headset magnifier revealed a dry joint on the hum bucking coil on the speaker. The joint was resoldered and the radio now operates reliably for the first time in 50 or so years.

Photo Gallery: Airzone Model 300

Manufactured by Airzone, Sydney, in 1934, the Model 300 is a typical Australian "cathedral" style set. It is a 4-valve superheterodyne set with the following valve types: 57 autodyne mixer, 50 amplifier, 59 anode bend detector/output and 80 rectifier. (Photo and information courtesy of Historical Radio Society of Australia).

Summary

As mentioned, aligning this receiver can be quite a chore. The "7-banders" are all slightly different in their alignment details and dial glasses, which means that the precise details for a particular model are needed if accurate alignment is to be achieved.

Unfortunately, very little alignment data is available, except in Volume 6 of the AORSM manuals. However, I have been thoroughly frustrated by the published alignment instructions and the errors that have crept in.

In the end, I developed a method that is relatively easy and is as accurate as possible for all models.

The AWA 7-banders are expensive receivers to service, especially if you want to achieve the best performance possible. The performance is (as expected) extremely good and the cabinet is impressive and really looks the part in the lounge room.

The tuning range covers 530kHz to 22.3MHz in seven bands. It has bandspread on the higher frequency bands and has a tuning mechanism that is very free, which makes tuning a dream compared to a normal dual-wave set covering nearly the same tuning range.

In summary, the AWA 719C console is a highly sought-after radio, with impressive performance, ease of tuning and a high price tag. If you have the room to display one of these radios, go for it. **SC**