VINTAGE RADIO

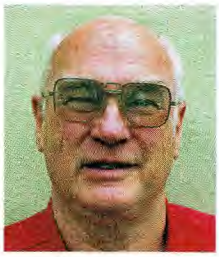

By RODNEY CHAMPNESS, VK3UG

The "Jelly Mould" STC 205 Mantel/Table Receiver

The 1948 STC 205 dual-wave receiver was a rather unusual set, especially when it came to cabinet design. In addition, there were some rather unusual circuit "quirks" in what was otherwise a fairly conventional 5-valve superhet.

At first glance, the STC 205 doesn't appear to be really any different from a hundred other 5-valve dual-wave receivers, circa 1948. But it is different – the cabinet slips over the top of the set like a tea-cosy does over a teapot. In fact, the cabinet style reminds many people of a jelly mould, hence the nickname given to the set.

The dial-scale is at the top of the set and is angled at about 45°. This fact, coupled with the overall styling of the cabinet, makes it difficult to decide whether the set is intended as a table or mantel set – or is intended to be both. Certainly, it would not look out of place on a table as the cabinet style is almost the same front and back. It does, however, have a cutout in the back of the cabinet near the top, which acts as a carrying handle.

This seems to suggest that it is primarily intended as a table set. However, it is small enough and slim enough to sit happily on a mantelpiece, although viewing the dial-scale wouldn't be all that easy.

As shown in the photos, the STC 205 has four control knobs and these are located on either side of the cabinet. Each of these is slid onto the shaft and held in place using a machine screw which goes through the centre of the knob and into the end of the control shaft. I am not aware of any other domestic receivers that use this method of securing the control knobs.

The STC 205 featured an angled dial-scale and an unusual cabinet that slid over the chassis from the top.

An unloved STC 205

My STC 205 receiver was obtained in fair condition only and needed quite a lot of work to restore it to working order. The cabinet was very dull and scruffy, the dial-scale cover and the cardboard chassis cover were missing, the power lead had been "repaired" with tape and one knob was missing. Fortunately, mice had not been in residence but the chassis was corroded and was covered in dirt, cobwebs and other debris from storage in a less than ideal environment.

The chassis isn't all that hard to get out of its cabinet, although the procedure is somewhat different to normal. First, the four knobs are removed by undoing the screws that go into the

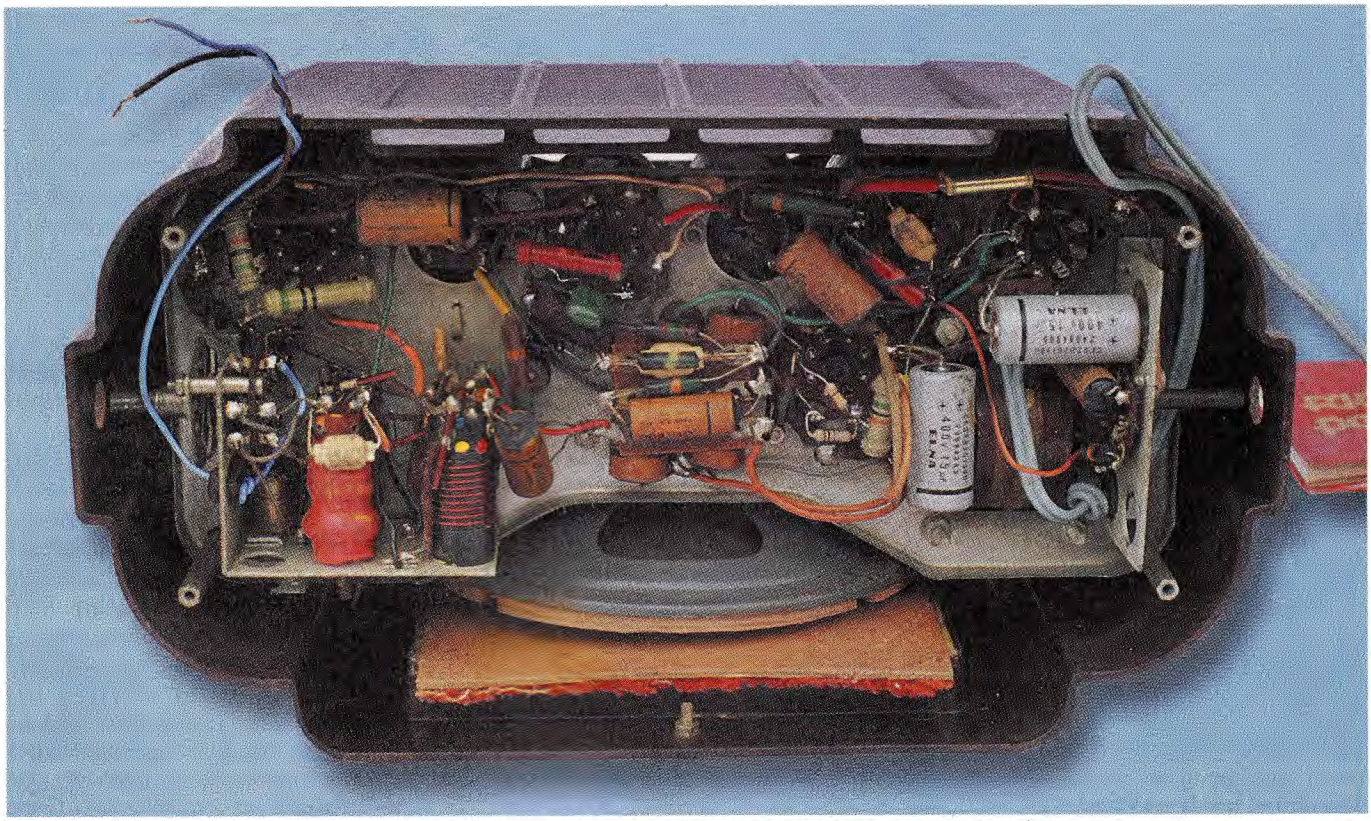

This view shows the bottom of the set with the cardboard cover removed. Access to the various components is quite good, although the cabinet has to be removed to allow access to the valves which are on the top of the chassis.

control shafts, then sliding the knobs off (see photo). That done, you have to undo the four screws through the rubber buffers on the base of the set, after which the buffers and the cardboard bottom plate are removed.

The final step is to undo the four pillars that hold the chassis to the cabinet. Once this has been done, it's simply a matter of lifting the cabinet off the chassis.

From the photographs, it can be seen that the chassis is well-populated with components and there is not much spare space. Despite this, access to the various components and to the valves is quite easy.

Cleaning up the mess

The speaker cloth was dirty, so it was removed and washed in soapy water. It was then thoroughly rinsed, stretched slightly and laid to dry (the cloth tends to shrink a little as it dries). Similarly, the cabinet and knobs were given a complete clean in the laundry tub using detergent, warm water and a good scrub with a nail brush.

Once clean and dry, the cabinet and knobs were given a cut and polish using car polish, which restored the original sparkle. That done, the speaker cloth was replaced and glued in position using contact adhesive.

As mentioned earlier, the clear celluloid dial-scale cover was missing. This was replaced with a cover cut from a clear shirt-box lid and glued into place using epoxy adhesive.

The next job involved cleaning the chassis and this was mainly achieved using a kitchen scouring pad dampened with household kerosene. However, there are many awkward nooks and crannies on the chassis which made this job difficult and the end result was only satisfactory – it certainly doesn't have a pristine, "just-out-of-the-factory" look.

If necessary, the pad can be cut up and pushed into awkward spots with a screwdriver and moved around. This helps to get most of the gunk off the chassis and components and I've found that kerosene-dampened scouring pads are quite effective for this job. It's not a good idea to use steel wool, as small slivers of steel can end up in the chassis where you don't want them and cause shorts and possible damage to the set.

Anyway, although not perfect, the end result was quite presentable. As a final touch-up, the dial pointer was painted white, as it had discoloured over the years.

Overhauling the circuitry

The set also had a few electrical problems. First, the power lead was replaced with a fresh twin figure-8 lead and because the set doesn't have an on-off switch, an in-line mains switch was fitted. Today, I would be inclined to fit a 3-core power lead for extra safety.

The valves were all cleaned using

Each knob is secured using a screw which passes through the centre and into the end of the control shaft.

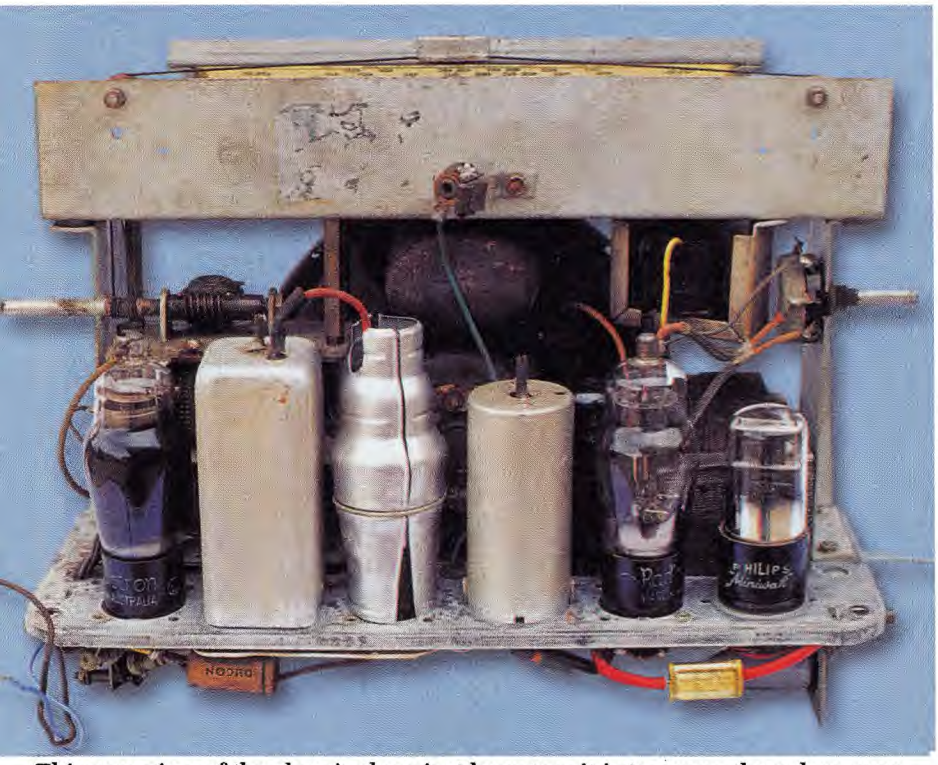

This rear-view of the chassis show just how easy it is to access the valves once the cabinet has been lifted off.

soapy water. This was done by holding the valves upside down and only washing the glass envelopes, to keep moisture from getting into the base. It's also important not to wash any printing off the glass envelopes (eg, the type number) during this process.

A lead on the loudspeaker transformer was found to have a dry joint and this lead fell off as soon as it was touched. I wonder how many strange effects occurred over the years because of this bad solder joint? The speaker transformer had never been replaced, so it was not a "new" problem.

Next, the two high-tension (HT) electrolytics were replaced and an audio bypass capacitor (C14) – omitted at the time of manufacture – was added. As a result, with both the dry joint resoldered and the missing capacitor fitted, this is one set that undoubtedly now performs better than brand new.

The bottom of the receiver is fitted with a cardboard cover and a sticker that shows the valve layout.

There were a few other problems as well. Resistor R13 had gone open circuit while R15 had gone high in value, so both were replaced. These defective resistors would have reduced the bias on the 6V6GT audio output valve to zero if the set had been turned on. As a result, the 6V6GT would have drawn excessive current if this fault was still present and this may have destroyed the valve.

From this, it can be seen that it's important to track down and correct as many faults as possible before deciding to "give 'er a go". Faults like those described above, plus leaky coupling capacitors and open-circuit loudspeaker transformers, can create havoc if not corrected before the set is switched on.

Four paper capacitors were also found to be leaky and these were replaced. These included two HT bypasses (C13 and C17), the AGC capacitor (C7) and the audio coupler (C22). In addition, several perished grommets were replaced, a new longer antenna lead was fitted, a dial lamp was replaced and a dry joint at the lamp socket was resoldered.

That done, the valves were refitted to the set so that it could be tested. First, however, I set my multimeter to a range greater than the expected HT voltage (around 250V) and connected it between the output of the 6X5GT rectifier and chassis. The set was then switched on and the HT voltage checked. As expected, it was around 250V with the new electrolytic capacitors.

Note that if the 6X5-GT rectifier had been low in emission, the HT voltage may have been quite a bit lower.

Anyway, the set did work but the IF stage was unstable and the earthing of the valve shield around the 6U7G was poor. Fixing this problem involved further cleaning of the chassis around the base of this valve, to make sure that the shield was properly earthed. This eliminated the problem at the time but the performance of this stage deteriorated later on and a fresh 6U7G had to be substituted to eliminate the whistles and crackles that had developed.

Alignment

Alignment of the STC 205 receiver was quite straightforward. First, a digital multimeter – set to the 0-20V DC

Watch Out For Asbestos In Vintage Radios

Over the last few years, there has been considerable publicity about the dangers of contracting cancer and other nasty diseases due to contact with asbestos. As such, readers should be aware that some old radio receivers included sheets of asbestos, usually fitted close to valves to prevent damage to heat heat-sensitive components and to the cabinet.

Any receivers with asbestos in them should be treated with extreme caution. Do not work on such sets until you have sought expert advice as how to the asbestos can be safely removed or stabilised within the set.

range – was connected across R9. With the tuning gang closed, the set was then switched to the broadcast band and a signal generator – set at 455kHz with tone modulation – connected to the aerial and earth terminals of the receiver.

The signal generator output was then increased and the output frequency varied slightly to see if the intermediate frequency (IF) was exactly 455kHz. In this case, it was close enough. The IF transformer slugs were then adjusted for maximum reading on the multimeter, the signal generator output being continuously reduced as each section was aligned.

If you don't have a signal generator, the procedure is to tune to a local station and vary the size of the antenna until the signal into the set is strong enough to give a reading on the multimeter. The set doesn't have to be exactly on 455 kHz – it's just a matter of adjusting the IF stages for best performance.

Next, the oscillator coil core (slug) is adjusted so that a station at the low-frequency end of the broadcast band (ie, around 600kHz) appears at its correct location on the dial. The aerial/antenna coil is then adjusted at around the same spot on the dial.

That done, you simply tune to around 1500kHz and adjust the oscillator trimmer capacitor (if necessary) so that a known station appears at its correct dial location. The aerial trimmer is then adjusted for best performance at the same frequency.

These adjustments interact to some extent, so it's a matter of repeating these adjustments at both ends of the dial until no further improvements can be obtained.

By the way, the trimmers in this model are made out of short lengths of thick enamelled wire (about 30mm long), each of which has several turns of tinned copper wire wound onto it.

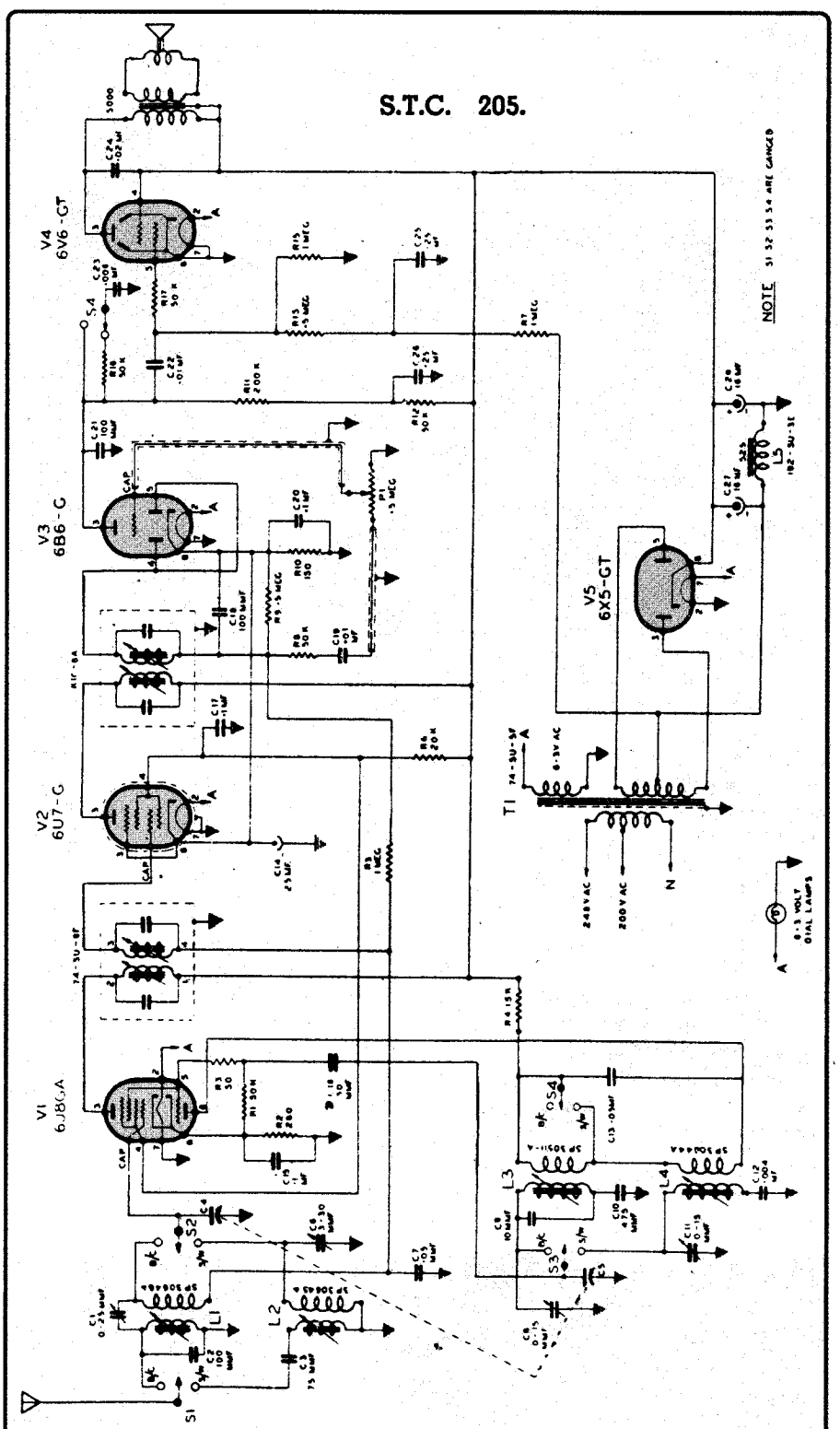

Fig.1: the STC 205 is a fairly conventional 5-valve dual-wave receiver with a couple of unusual features.

This view shows the chassis from the front. The angled dial-scale is mounted on an L-shaped bracket which is supported on the chassis base using a couple of metal pillars.

The actual capacitance is varied by altering the amount of tinned wire over the enamelled wire. If you take too much off, you will have to solder more thin tinned copper wire onto the end of the original winding.

This can be a messy business and so most people tend to leave such trimmers well alone. If the set does not appear to be down in performance, I'd also be inclined to leave them as they are rather than risk it.

The shortwave band is aligned in the same way as the broadcast band except that the frequencies are higher. The low-frequency end should be aligned at about 7MHz and the high end at around 16MHz.

Note that on shortwave, problems can arise with image reception and this can upset the alignment. For more detailed alignment procedures, readers should refer to my article in the February 2003 issue.

A walk-through the circuit

Fig.1 shows the circuit details of the STC 205. The first thing to note is that the antenna tuned circuits are a little different to other receivers. For starters, the broadcast-band antenna coil's primary resonates below the broadcast band and this gives improved performance at the low-frequency end of the dial.

In addition, trimmer C1 (for the high-frequency end of the dial) is wired across the tops of the two windings in the antenna coil. This boosts the coupling from the antenna to the tuned circuit, although it is unusual to have the trimmer in this position. Most sets have this trimmer going from the grid of the RF valve to chassis.

By contrast, the shortwave coil has a capacitor (C3) in series with its primary winding. A capacitor placed in this position has the effect of electrically shortening the antenna and perhaps this was the intent. Using an "average" antenna of around 6-7 metres, the antenna system would resonate somewhere near the high end of the shortwave band.

By the way, if you look carefully at the two antenna coils you will see a drafting error – both coils show the coil adjustment in the untuned winding! Someone didn't spot this when checking the circuit diagram.

The oscillator circuit is conventional but there is a right royal blunder in this circuit too! C13, which has a value of 50nF (0.05μF), is shown wired across the feedback windings of both oscillator coils. However, if this had really been done, the oscillator would have no feedback due to the heavy damping of the winding by the capacitor. The bottom end of C13 should in fact go to earth.

The IF stage is conventional and uses a 6U7G followed by a 6B6G as a combined detector, simple AGC and first audio stage. The 6U7G and the 6B6G share a common cathode bias resistor and common bypass capacitors. This is unusual, as the 6U7G will draw less current as the AGC voltage increases which will mean that the voltage across R10 will also drop. This in turn will reduce the bias on the 6B6G and alter its operating conditions.

It's a strange design quirk that appears to have no redeeming features.

The audio output stage is also quite conventional and uses a 6V6GT audio output valve. However, I find it puzzling that cathode bias is not used in this stage, as all other stages of the receiver use this method. It would also have been quite practical to use back bias on all stages instead of just the 6V6GT stage.

As with a great deal of other STC equipment, the filter choke is in the negative power supply lead. This reduces the voltage stress between the

Photo Gallery: Stromberg Carlson Model 496 Receiver

Manufactured by Stromberg Carlson (Sydney) in 1936, the Model 496 is a 4-valve superhet housed in a substantial wooden mantel cabinet.

The set used a mixture of valve types which required individual 4V, 5V and 6V heater windings on the transformer. The valve types used were: 6C6 (autodyne mixer), 6F7 (IF amplifier and detector), AL3 (audio output) and 80 (rectifier).

The high-gain AL3, with its 4V heater and "P" type base, was probably chosen to compensate for the lack of a separate audio preamplifier stage. It would have been one of the few high-gain output pentodes available at the time, with a "gm" nearly four times that of the more commonly-used type 42.

The same chassis was also used in the Model 436 console receiver. (Photo: Historical Radio Society of Australia, Inc).

choke frame and the winding. And as is common in other receivers of this vintage, there is no decoupling between the audio output plate circuit and the plate circuits of any other amplifying stages. As far as I am concerned, this is poor design and can lead to receiver instability.

Summary

Although this set has a number of less than perfect design features, its performance is quite satisfactory and it is quite a pleasant receiver to use. The performance is typical of other dual-wave 5-valve radios of the era. And although it has nothing at all to do with the operation of the set, the errors in the circuit diagram are annoying and indicate a lack of care in drafting and checking.

Did this apply to the on-line testing of individual receivers as well? Hopefully, the faults in mine were an isolated occurrence.

In summary, this STC receiver is quite different to many other sets, particularly when it comes to cabinet style. As such, it is a collectable item if only because of its unique style.

Errata

In February 2003, page 81, second column, the last two sentences in the last full paragraph should be corrected to read: "If it improves, more turns are needed and if it gets worse, either fewer turns are needed or the stage is accurately tuned. A brass slug (from an old volume control) inserted into the coil should give a slight increase in performance if the coil inductance is too high".

"If the performance deteriorates using either the ferrite or brass slugs, the tuned circuit is accurately tuned". **SC**