Vintage Radio

By RODNEY CHAMPNESS, VK3UG

The Astor AJS – an economy universal car radio

Designed as an economy model, the Astor AJS car radio used six valves and could be used with both positive and negative earth vehicles. It also employed a vibrator power supply and was an excellent performer.

A FRIEND WAS disposing of his collection of old radios and various bits and pieces and "threw" them in my direction. Amongst them was a rather battered old car radio – an Astor AJS.

Unfortunately, its front panel escutcheon was broken and I initially had no idea as to how I might fix it. As a result, the set was put to one side until a friend suggested that a product called "Knead It" from Selleys may be suitable for the repair.

As it turned out, this was just the shot for remaking the missing section of the escutcheon but more on that later. Now I had no excuse for not restoring the old Astor radio.

Looking quite smart – the old Astor AJS car radio with its repainted cabinet and its fully restored escutcheon.

Universal radio

The AJS is a 6-valve, universal, vibrator-powered car radio that runs off 12V DC. What do I mean by universal? Well, this set is an economy model and was designed to fit any car of the 50s and 60s by being screwed to the underside of the steel dashboard. It has an integral speaker, no RF stage and can be used with both positive and negative earth vehicles (many English vehicles in particular used positive earth at that time).

Sets of this type were a joy to install, taking under half an hour from the time the vehicle arrived in the workshop until it was driven out. I remember fitting car radios with a firm in Adelaide back in the late 1950s and we could fit and adjust a car radio in a Holden FE, complete with a separate speaker behind the dash, in about 20 minutes. A really switched on installer could probably fit one of these AJS models in under 15 minutes. Try that with the latest vehicles!

Astor made many different car radio models from the 1930s until about 1970, when imported car radios sank that part of the domestic radio manufacturing industry. Along with other Australian manufacturers, they made many high-performance receivers that could pick up stations over long distances. These sets were often limited only by the effectiveness of the ignition interference suppression and the amount of noise generated by the high-voltage power lines that run alongside many of our roads and streets.

Cleaning up

As it came to me, the old Astor

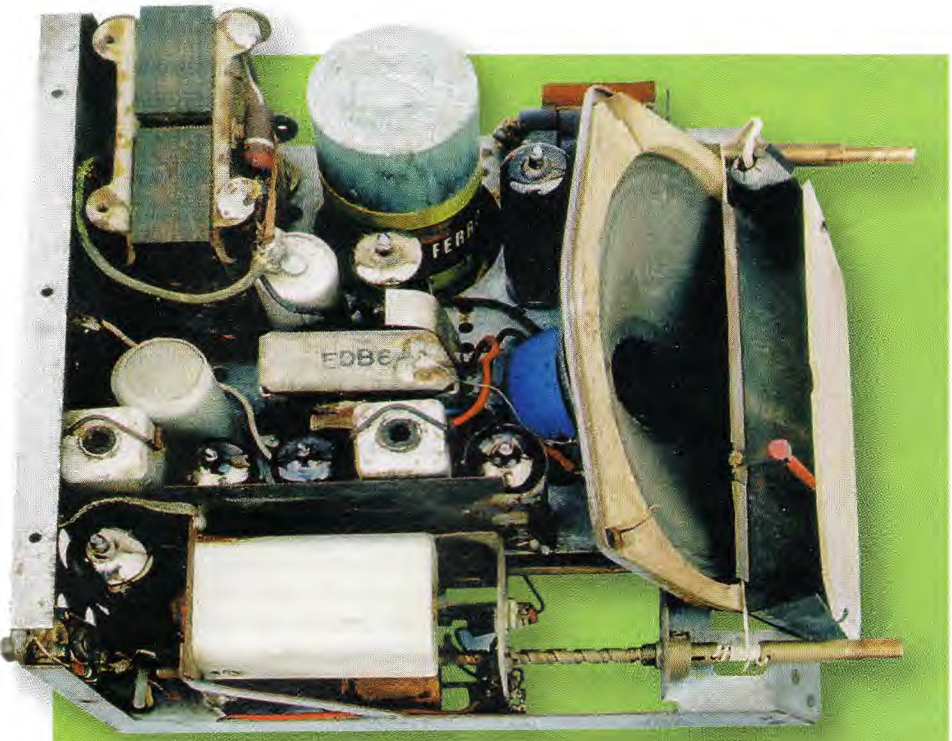

This top-chassis view emphasises the compact nature of the unit. Note the vibrator supply components at the top of the photo.

receiver was in a rather sorry state. The first step was to give it a thorough clean-up. The case was given a good scrub in warm soapy water, then rinsed in clean water and allowed to dry – I didn't want it to rust any more than it already had! I then masked the escutcheon area and gave the case several coats of rust inhibiting paint from a spray can.

That done, I turned my attention to the broken front panel escutcheon. As had been suggested, I used Selley's "Knead-It" (available from hardware stores) to make a new piece to replace the missing section. However, I decided that the "Knead It" might also need reinforcing, so I obtained a short length of thin high-tensile wire and ran it along the area where the escutcheon would be.

First, a small hole was drilled into one end of the remaining escutcheon. One end of the wire was then placed in the hole and the other end was wedged under the other end of the escutcheon. That done, I then glued (with Araldite) the wire in several spots to the receiver case, along where the escutcheon would normally be. Finally, I got out the "Knead It" and laid it along and around the wire. I initially found it a little difficult to knead but warming up the material makes it more pliable and easier to work.

After about half an hour, it had set and using a knife and file, I was able to shape the hardened material to match the profile of the missing section. Once it had fully hardened, I spray-painted the whole escutcheon in the nearest colour available in a spray paint can.

Cleaning the inside

With the outside of the set now looking the part, it was time to tackle the chassis. The first step was to draw a diagram of the valve locations, as this information is not marked anywhere on the set. That done, the valves were all removed, cleaned with soapy water, rinsed and stood on their pins to dry.

When doing this, you have to be careful not to rub the type numbers off the valves. If you do rub a type number off or damage it, a black fine-pointed marker pen can be used to remark the glass envelope. It might not be as neat as the original marking but a least it will help prevent the valves getting mixed up and possibly plugged into the wrong sockets.

For a car radio, this set was remarkably clean. A small paintbrush was used to get rid of loose dust and other debris from the chassis, although an air-compressor can also be used (with care) to do this job.

The more "caked-on" muck was removed using a strip of a kitchen scouring pad moistened with kerosene. In this case, some gentle scrubbing got rid of most of the muck and the set with its cleaned valves now looks quite smart. The more awkward spots on the chassis are cleaned by using a pencil or screwdriver to push the scourer back and forth to get the muck off.

In this set, the dial scale has become a bit brittle and has yellowed with age. It was cleaned carefully with soapy

Photo Gallery: Genalex Model 610

Manufactured by the British General Electric Company Ltd, Sydney in 1939, the Genalex Model 610 was a dual-wave superheterodyne set that covered both the medium-wave and the 6-18.75MHz short-wave bands. An extra large dial was fitted to the front of the receiver, while the speaker faced upwards, the sound exiting from the top of the receiver. The valves fitted were as follows: 6K8-G frequency changer, 6U7-G IF amplifier, 6G8-G audio amplifier/detector/AVC rectifier, 6V6-G audio output and 5Z4-G rectifier. Photo: Historical Radio Society of Australia, Inc.

water and a soft brush and came up reasonably well. What's more, the printing is all still attached to the scale – a lot better than in some sets where the printing falls off if you just so much as look at it (or so it seems).

Before cleaning any dial scale, always test a small area that is hidden by the escutcheon or is of little value, to see how firmly the lettering is attached. The value of a set with a ruined dial is much lower than a similar set with a good dial scale.

Unlike the chassis, the knobs were extremely grotty. They were thoroughly cleaned in a basin with soapy water and a nail brush and came up looking almost like new. However, one knob is a two-section unit and it had broken apart. It was glued together using Araldite and the set was now looking rather spick and span.

Parts replacement

As is my normal policy, I did all the routine fault-finding before turning the set on. The power lead and the fuseholder were in very poor condition. The power lead was replaced with 3mm automotive cable, while the badly corroded fuseholder was replaced with a more modern plastic unit. This new fuseholder was spliced into the line using crimp connectors.

I fitted a 5A 3AG fuse although the circuit diagram says to use a 15A fuse. That may be OK for the 6V version but for the 12V version of the receiver, a 5A fuse is perfectly adequate. After all, the set only draws 3.25A on 12V according to the service data.

Personally, I like to fit a fuse with a rating that's not much higher than the maximum operating current. If too high a value is fitted , the set could be virtually on fire before the fuse blows – if it blows at all.

Buffer capacitor

Astor car radios with vibrator power supplies had one component that caused considerable trouble and that was the 8.2nF (.0082µF) 2kV paper buffer capacitor across the plates of the rectifier valve. If this capacitor is not replaced, the vibrator may break down after only a few hours of operation. By contrast, some models used 4nF (.004µF) mica buffer capacitors which gave very few problems.

More information on vibrator power supplies can be found in the Vintage Radio columns for September and October 2003. In addition, the October and November 2004 columns highlighted the problems that paper capacitors suffer.

It's always a good idea to take a good look at the wiring before replacing any components in car radios, as there are usually lots of parts packed into a relatively small space. As a result, it will usually take you longer to replace components in a car radio than in a normal mantel or console receiver.

Lead dress is often important too, otherwise you may not get all the parts in. In addition, the stability of the receiver may be compromised as car radios are high gain receivers and the inputs are not that far away from the outputs. The best advice is don't take any shortcuts with wiring – instead, rewire it exactly as it was originally.

Note that any earths to chassis around the vibrator supply should always be made to the same spot as before. The wiring around the vibrator supply is often critical, otherwise

interference (vibrator hash) may be generated which gets back into the antenna and thus into the receiver. However, this isn't usually a problem as the whole set is within a metallic shield and the antenna is mounted outside the car and connected to the set via a shielded lead. This shielded lead also keeps out vehicle-generated interference (eg, ignition noise).

Another feature used to reduce interference into and out of the receiver is the "HASH PLATE", as seen on the lower left of the circuit. In this receiver, it consists of a metal strip along the side of the chassis, near the vibrator power supply, and is about 80mm long and 12mm wide.

In practice, it is mounted between the chassis and another metal plate, with a strip of insulation on either side of it so it does not short to either the chassis or the other earthed plate. The 12V supply comes in at one end of this plate and out the other end.

In effect, the two plates form a very low inductance capacitor which helps prevent interference from the car's electrical system getting into the sensitive RF stages of car radios. It also helps prevent interference from the vibrator circuit going out along the power supply line.

Such plates are not used today as more effective filters are now made, such as coaxial capacitors, etc.

Finally, I checked all my usual suspect components and found that most were leaky. These were replaced, along with the buffer capacitor mentioned earlier. Basically, those components numbered (5), (20), (24) and (27) were replaced.

Powering up

By now, all the critical components had been checked and all appeared to be in good working order. Power was then connected and the set switch on. No unpleasant smells or noises came from the receiver and the vibrator was humming away quite happily.

This was a bonus, as I had expected that the vibrator might not function as most had only limited lives. In fact, the high-tension (HT) voltage was close to normal, which was very pleasing.

The set itself was showing signs of life so I put a screwdriver into the antenna socket and touched the shaft so that I acted as an aerial. The set then pulled in stations quite strongly as I tuned across the band.

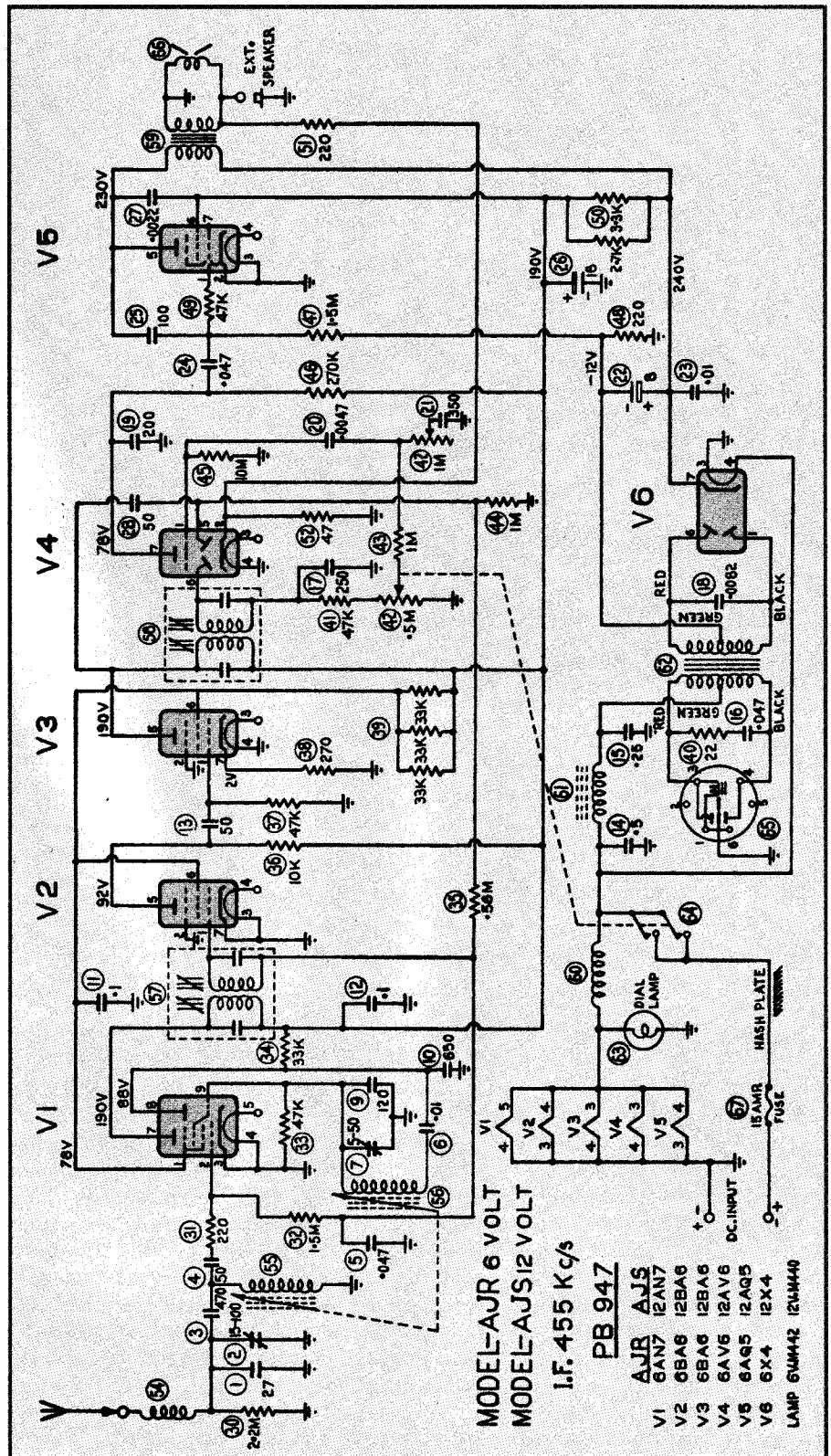

Fig.1: the circuit uses six valves but unlike many other car radios of the era, has no RF stage. Despite this, the set has very good performance.

I checked the front-end alignment and all appeared to be spot on so I left it alone. Similarly, I left the IF alignment alone as the IF transformer adjustments are usually well and truly locked in place with sticky core locking compound. It doesn't mean that you cannot adjust them but it's best

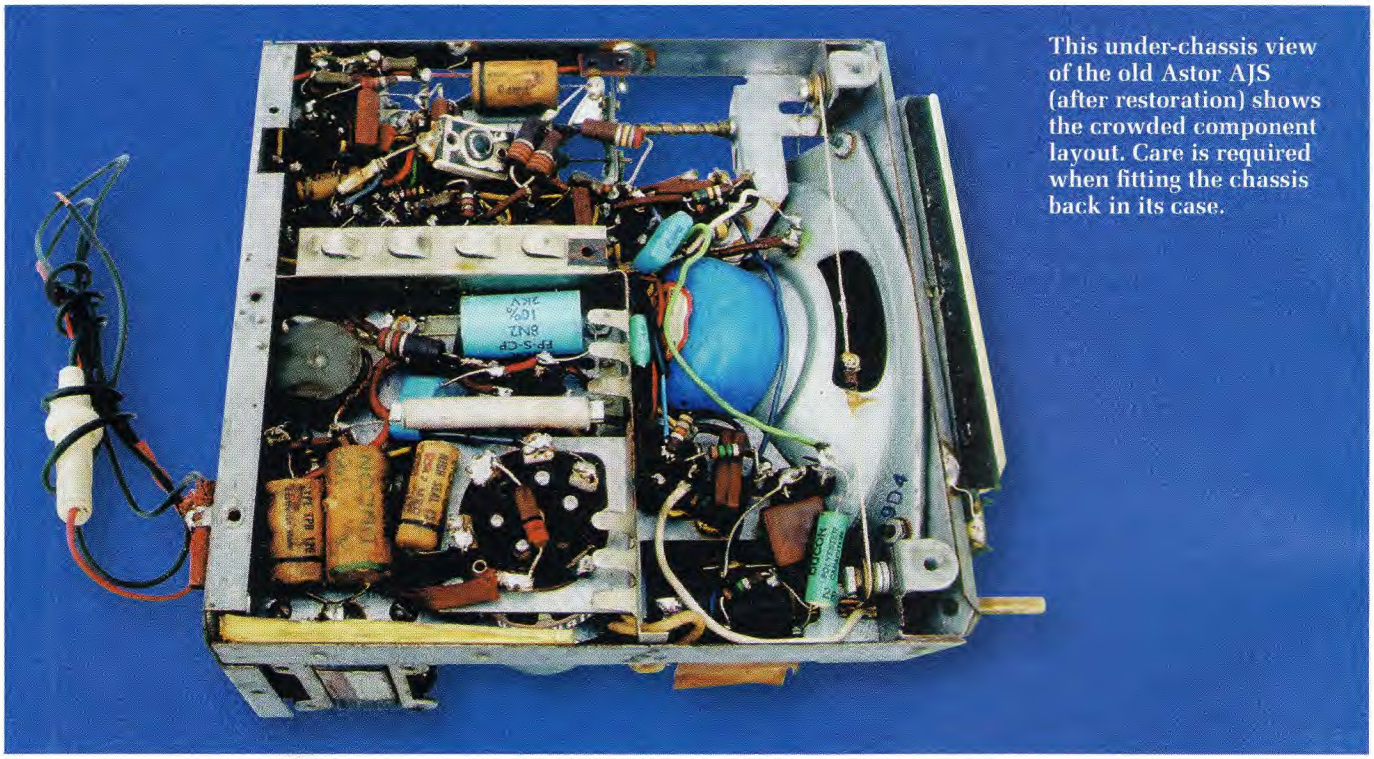

This under-chassis view of the old Astor AJS (after restoration) shows the crowded component layout. Care is required when fitting the chassis back in its case.

to leave them if you can.

In this case, the set's performance meant that there was no need to align it. However, once the receiver is installed into a vehicle, the antenna circuit coil will need adjustment at around 1400kHz for best performance. In fact, all car radios of this era need this after installation or service. The adjustment control is on the back apron of the receiver, alongside the antenna socket.

Reassembly

Reinstalling the chassis into the case proved to be quite a task. That's because the set is crammed into the available space and there is very little clearance between the chassis components and the cabinet. In practice, I had to flex the cabinet so that I could slide the chassis in.

Unfortunately, when I tried the set out, the oscillator wasn't working so there were no signals. I dismantled it again and tried to find out if any components had shorted but couldn't really find anything wrong.

In the end, I moved a few parts around to make sure that the clearances were adequate. The set was working out of the cabinet so I shoe-horned it back in and tried it again. This time, it worked so I had obviously shifted the right item to stop it from shorting.

This sort of problem is not uncommon in tightly-packed units such as car radios.

Circuit details

The circuit for this receiver is somewhat different to most car radios of the era. That's because it has no radio frequency (RF) stage. Instead, the received signal feeds straight into the converter – a 12AN7 (or 6AN7 in the 6V version).

Note that the 12AN7, 6AN7, 6AE8, 6AJ8, 12AH8 and other miniature valves of the general triode-hexode family are much quieter converters than the more popular 6BE6 and other pentagrid converters. If a 6BE6 had been used in this position, it's likely that the receiver would have been quite "hissy", which would have been annoying and would have restricted its ability to pick up weaker stations.

Because they have only small antennas, car radios are almost always working with weak signals. I have a number of receivers which use triode-hexode converters as the first amplifying valve in the receiver and many of these are quite good performers on both the broadcast and shortwave bands. I cannot say the same about receivers using a pentagrid converter, although sets using pentagrids are more common than those with triode-hexode converters.

The IF amplifier stage in this receiver is also rather unusual, in that it has two valves (V2 and V3) between the two IF transformers. These valves are both 12BA6s (or 6BA6 for 6V) and are resistance-capacitance coupled. In fact, the circuit looks a bit like an audio stage except that the component values are different. It uses a 10kΩ plate resistor, a 47kΩ grid resistor and a coupling capacitor of just 50pF.

This coupling method is not particularly efficient at intermediate frequencies (IF) such as 455kHz. However, a variant of the normal audio amplifier inter-stage coupling method is used in valve (and transistor) video amplifier circuits which will amplify signals quite effectively to at least 5.5MHz.

It appears that Astor wanted more gain than could be obtained using just one 12BA6 but less than that obtained using two valves in a conventional 2-stage IF amplifier. By adjusting the values of the coupling components, the designers were able to tailor the two stages to get the maximum gain possible, consistent with stability and low cost.

Delayed AGC

The signal detector and AGC diode both have a small delay before they operate. This means that the receiver is slightly muted between stations, as the diode detector has bias on it due to the fact that V4's cathode is a

fraction of a volt positive compared to the detector plate. This delay also provides the delayed AGC.

The audio amplifier stages are quite conventional and similar circuits are used in many mantel radios. Back bias is provided for the 12AQ5 by the voltage drop across resistor 48. Negative feedback is provided from the secondary of the speaker transformer to the cathode of V4 via resistors 51 and 52. These two resistors form a voltage divider, so that just the correct amount of negative feedback is applied. The audio top-cut filter/IF signal bypass capacitor (27) is wired from plate to screen, which reduces the voltage across this capacitor.

The power supply is a standard vibrator circuit, as used in almost all Astor vibrator car radios. Compared to those used in household vibrator power supplies, the filtering in this set is minimal.

To reduce interference from this supply, the antenna is connected via a shielded cable as mentioned previously. In addition, the wiring between various stages within the set has been kept short to minimise pick-up from the supply.

A valve rectifier is used to convert the square wave AC from the vibrator into DC. The advantage of having a valve rectifier is that the active power lead from the set can be connected to either +12V or -12V, depending on whether the car uses positive or negative earthing.

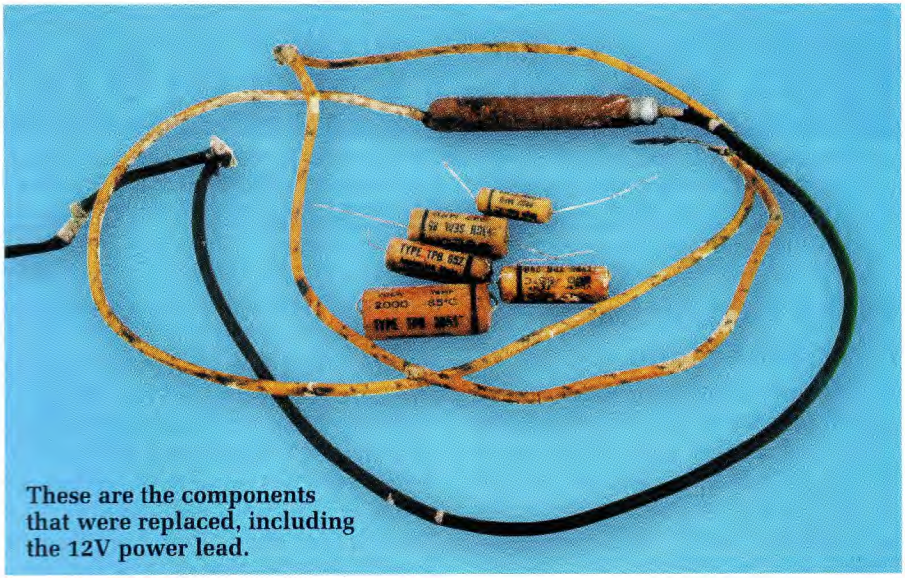

These are the components that were replaced, including the 12V power lead.

Components 18 and 16 are the buffer capacitors. As mentioned earlier, capacitor 18 can be troublesome but capacitor 16 rarely gives trouble as it is not highly stressed.

Summary

I must admit that I didn't expect this little Astor receiver to be as good as it really is. Despite being an economy design, it does what it is expected to do and performs very well.

On the debit side, it's not an easy set to service (like most car radios), as the parts have to be mounted precisely or they won't fit. As an example, the replacement 8.2nF 2kV buffer capacitor was difficult to fit as the original was physically smaller.

It may not be the flashiest set around but I'd certainly give Radio Corporation the thumbs-up for this little set. It's a set that's well worthwhile collecting, if only to show just how good an economy car radio could be. **SC**