Vintage Radio

By RODNEY CHAMPNESS, VK3UG

AWA B33: the ultimate Australian-made transistor portable

Designed for the well-heeled, AWA's Radiola B33 was a very impressive transistor portable that tuned the broadcast band and three shortwave bands from 1.6-30MHz. Restoring and aligning it is not the easiest of tasks, however.

AWA produced some superb receivers over the years and the 4-band AWA B33 9-transistor portable was one of them. In addition, a broadcast-band only model of this receiver – designated the B32 – was manufactured and this was described in the August 2005 issue.

I lamented at the time that I didn't have a B33 and a few readers responded by offering me sets that were just gathering dust or had been pulled to pieces. In the end, I obtained two of these receivers and this article describes the restoration of one of those sets.

Although sets like the B33 were produced, Australian-made multi-band transistor receivers were not all that common. Australian manufacturers did produce transistor receivers in quantity during the 1960s and early 1970s but these were mainly broadcast-band sets. However, Japanese manufacturers were starting to flood the Australian market and many of their sets featured one or two shortwave bands in addition to the broadcast band.

Despite this, Australian-made transistor radio receivers performed far better than the Japanese offerings but that didn't stop the flood of imported sets. Japanese sets were cheaper and people wanted the cheaper item – even if it was inferior.

During that era, it is arguable that Australian-made transistor receivers were the best performing AM sets in the world. Most other countries had FM as well as AM and their radio stations were not spaced as far apart as in Australia, even in rural environments. As a result, Australian-made radios had to be better performers in order to adequately receive stations over longer distances.

Of course, AM in many cases was the poor relation in regards to performance on AM/FM receivers and still is today (except on high-quality communications receiving equipment).

This is the fully restored B33 receiver. Scrounging parts from a second set allowed it to be restored to almost new condition.

Shortwave reception

As well as listening to AM stations, many people also wanted to listen to the many shortwave services available both within Australia and overseas. However, they didn't want the inconvenience of having a home-installed receiver tethered to an outside antenna. Instead, they wanted a portable receiver that didn't normally require an outside antenna for "run of the mill" listening.

The AWA B33 filled that role but like many receivers of the era, also had provision for an external antenna and

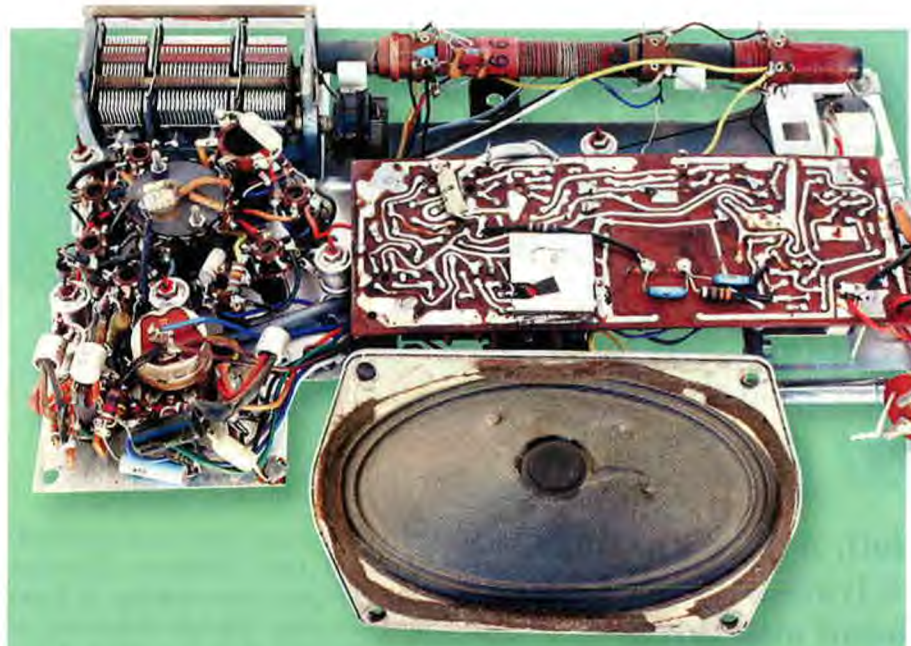

This view shows the rear of the chassis plate, after its removal from the cabinet. The PC board is mounted upside down on this plate.

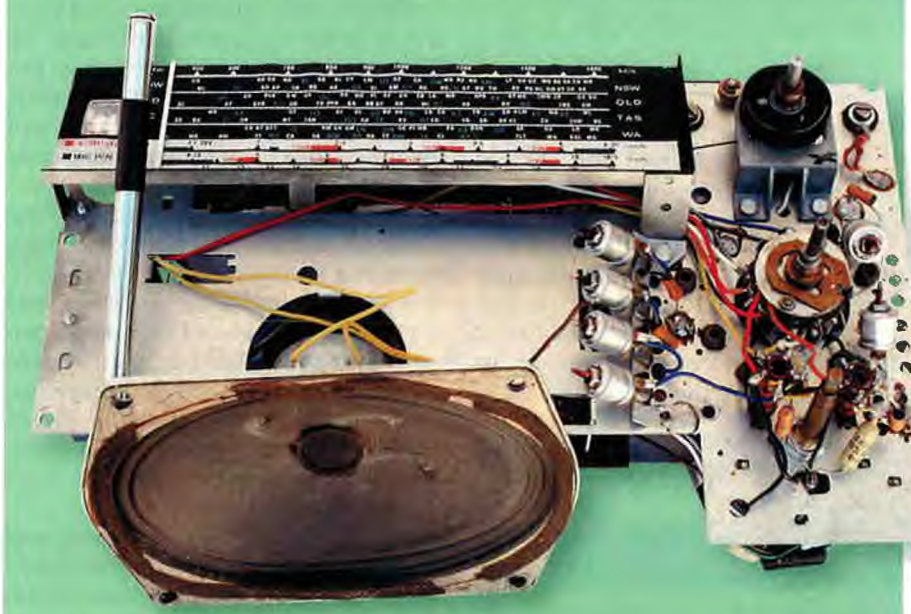

The front of the chassis plate carries the dial scale and various trimmer capacitors which are used for alignment. The faults in the receiver were all mechanical.

earth, which noticeably improved the already good performance. Provision was also made for the connection of an external 9V power source.

Used with an outside antenna system, the B33 would have easily received the ABC inland radio services situated near several capital cities. All these stations have since closed down and the Lyndhurst site near Melbourne is now a housing estate!

However, the ABC still provides a service to remote areas of inland Australia from Alice Springs, Tennant Creek and Katherine, on 2310kHz, 2325kHz and 2485kHz at night and 4835kHz, 4910kHz and 5025kHz during the day. Unfortunately, the daytime services from these three 50kW stations can not heard in southern Australia but the night-time frequencies can be received without problems.

In addition, Radio Australia at Shepparton, Victoria carries services to northern Australia in times of disaster – such as during the recent cyclone Larry.

The B33 receiver

The AWA B33 was produced around 1965 and is essentially a "high-end" receiver. It has a large 195 x 12mm loopstick antenna with two sets of windings – one for the broadcast band and the second for "shortwave 1" which tunes from 1.6-4.25MHz. The other two shortwave bands tune 4-30MHz and rely on the use of the telescopic whip antenna for signal pick-up when the set is used as a portable.

Fig.1 shows the set's circuit details. The first thing to note is that the band-switched input circuits are connected to an RF stage based on a 2N2083 transistor (VT9). Its collector signal is then fed via another bank of four tuning coils to a transistor mixer stage based on another 2N2083 (VT10).

Most transistor receivers use an autodyne converter stage but not so the B33 which uses a separate oscillator (VT11). This provides better performance and more stable operation. The output from the mixer (VT10) is then fed to a 2-stage 455kHz IF (intermediate frequency) amplifier based on transistors VT3 and VT4. The IF output in turn feeds diode detector MR3 which is then followed by three stages of audio amplification (VT5-VT8).

The audio amplifier includes a push-pull output stage and this is coupled directly to a speaker with an 80Ω centre-tapped voice coil. Hopefully, the speaker will never need changing, as obtaining a suitable replacement would be impossible unless salvaged from another similar receiver.

Case details

The B33's case is dark blue/black leatherette, while the front is plastic with vapour-deposited chrome to give it a metal appearance. This is attached to a plastic inner frame.

The case is quite substantial for a transistor receiver and measures 320mm long x 200mm high (not including the handle) x 110mm deep (including the knobs). It's quality is quite good and is noticeably better than the cases fitted to down-market AWA transistor receivers.

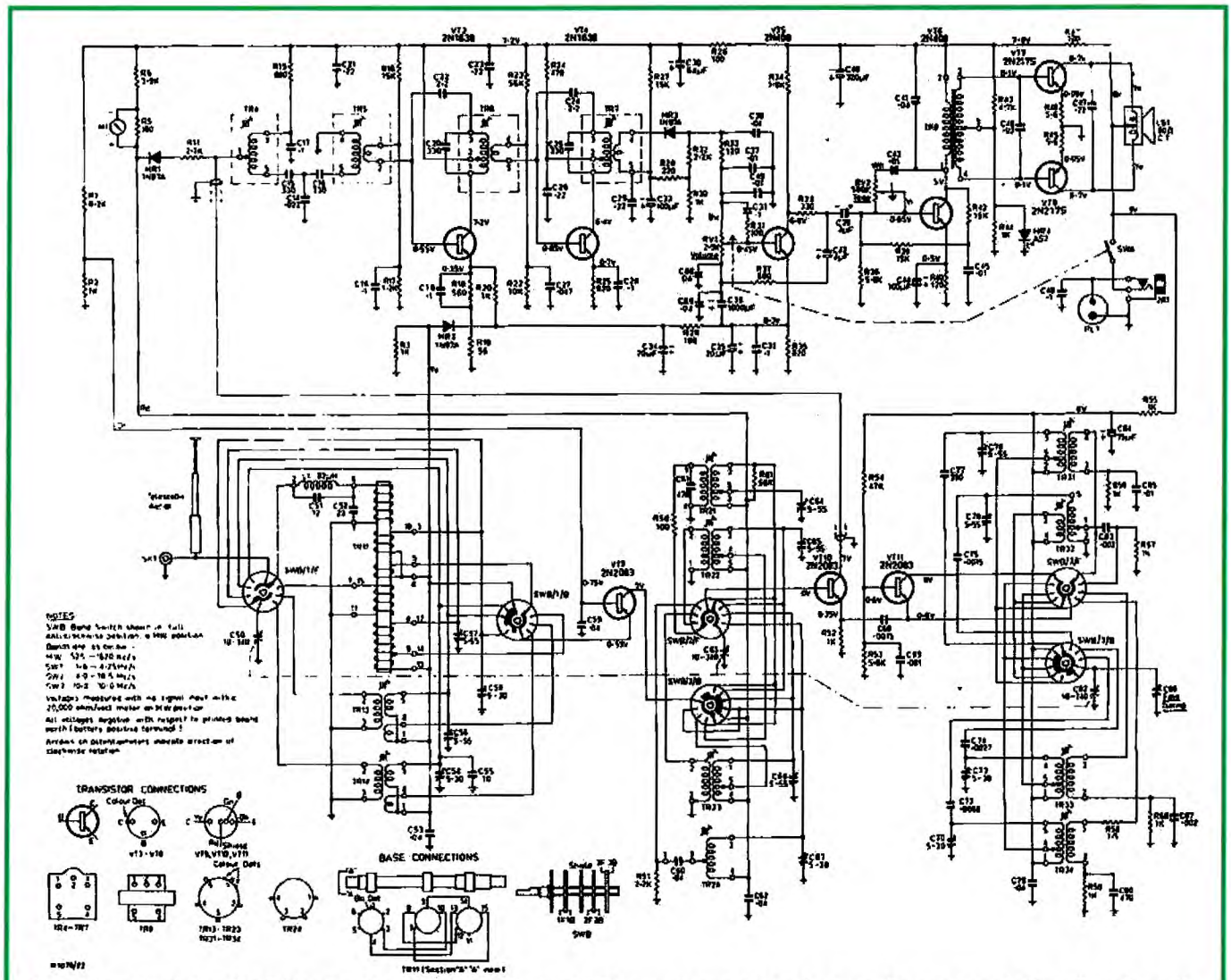

Fig.1: the circuit for the B33 4-band receiver used nine PNP transistors. Note the transformer-coupled push-pull audio output stage and the centre-tapped 80Ω loudspeaker.

Due to its size, the set is quite heavy, weighing in at 3.6kg, or 4.6kg with its heavy-duty batteries. The set was designed to use the now unobtainable 2761 battery. However, two D-cell battery holders – one for four cells and the other for two cells – will fit into the space that the 2761 occupied, provided the speaker's terminals are orientated towards the top of the cabinet.

In practice, the two holders were wired in series to give 9V. The "output" leads were soldered to the ends of the battery plug to keep things as authentic as possible, with heatshrink tubing fitted over the exposed plug prongs to prevent shorts.

Provision has also been made for the attachment of an external 9V power supply. However, there is one important thing to note here: like most transistor receivers using PNP transistors, this set has a positive chassis. This means that the sleeve of the DC plug must be positive (centre negative).

Finally, the B33 is fitted with a bayonet socket on the lefthand end of the receiver. This allows an external antenna and earth to be connected for a worthwhile performance boost.

Cabinet restoration

The first job in the restoration process was to remove the control knobs and this proved to be a very difficult task – it was if they had been glued in place. Fortunately, I was able to squirt some Inox cleaner/lubricant into the backs of the knobs and also on the control shafts to help free them.

The wave change switch had also completely "frozen" and it took some time to work the Inox down the shaft and into the switch sleeve. Eventually, I was able to get it to move but I had to use a small spanner on the shaft to achieve this. Initially, I was concerned that the switch might break but the lubricant eventually did its job, after which the switch operated freely.

With the knobs removed, it was now time to remove the chassis from the cabinet. This is achieved by first undoing six screws and removing the escutcheon around the power and antenna sockets. That done, the chassis is lifted up slightly and the screw holding the telescopic antenna in place removed. The chassis is then slid out far enough to allow the centre-tap wire to the speaker to be desoldered, after which it is fully removed from the case (the leads to the voice coil

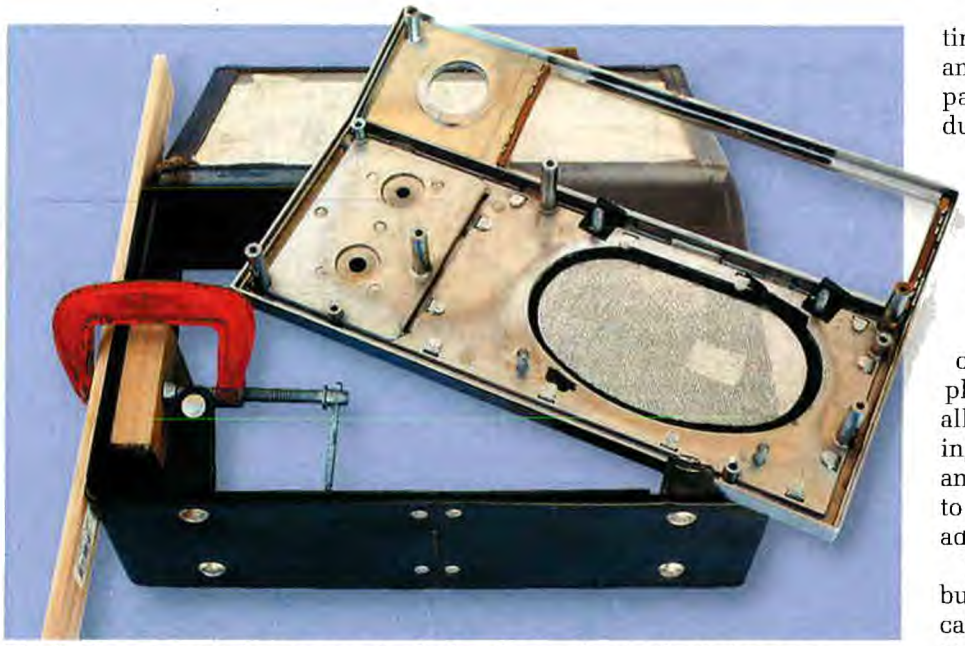

The leatherette covering was re-attached to the receiver's plastic inner case using contact adhesive, with a G-clamp and some small pieces of wood used to hold everything together while the adhesive dried.

are long enough to be left connected to the speaker).

Having removed the chassis, I installed a longer centre-tap lead to make future work easier. I then undid the four screws holding the speaker in place and removed it, while undoing four more screws allowed the front panel to be removed as well. Finally, I refitted the antenna to the chassis, as this would be needed later for testing.

By the way, it's important not to lose any screws with this sort of job – it can be very time consuming if you have to replace them. My approach is to store all screws in a small container as they are removed. Leaving them laying around the workbench is just asking for trouble, as they are easily lost.

Cleaning up

Having dismantled the set, it was time to clean all the parts and repair any damage to the cabinet. A small paintbrush was used to clean the dust from the chassis and PC board, while the cabinet was scrubbed in soapy water using a nailbrush and, for in the awkward spots, a toothbrush. The knobs were also scrubbed clean in soapy water and they look almost like new.

Unfortunately, the leatherette covering had come away from the plastic inner case on one side and really looked tatty. This was repaired using contact adhesive, with a G-clamp and two small pieces of wood used to hold everything together while the adhesive dried.

This repair was quite satisfactory but in the end, I decided to use the cabinet from the second set, as it was in better condition overall. The dial scale also had to be re-glued to its frame and this was done using clear nail polish.

Servicing

The B33 is far more complex than its single-band brother and requires disassembly to do any real work. It's a pity AWA didn't make it easier for the serviceman. On the other hand, it's likely that very few of these sets ever required servicing during their lifetime!

With the set out of the cabinet, I applied 9V to the PC board and was immediately able to receive some stations. However, as I tuned across the broadcast band, there were more scraping noises than stations.

I lubricated all the moving surfaces on the dial tuning mechanism but the problem remained. A subsequent close examination revealed that a number of plates in the antenna and RF sections of the tuning gang were intermittently shorting together. This problem can usually be fixed by gently bending the offending plates but not in this case. In fact, it was quite likely that this tuning gang had been faulty from new, as the oscillator section was perfect.

One way around this problem was to use the gang from the other radio. It looked to be in good order and so it was worth a try. However, swapping in the new gang without having the dial cord end up in a mess would be a challenge.

First, I released the cord from the pulley at the lefthand end of the drive, which meant that I could then ease

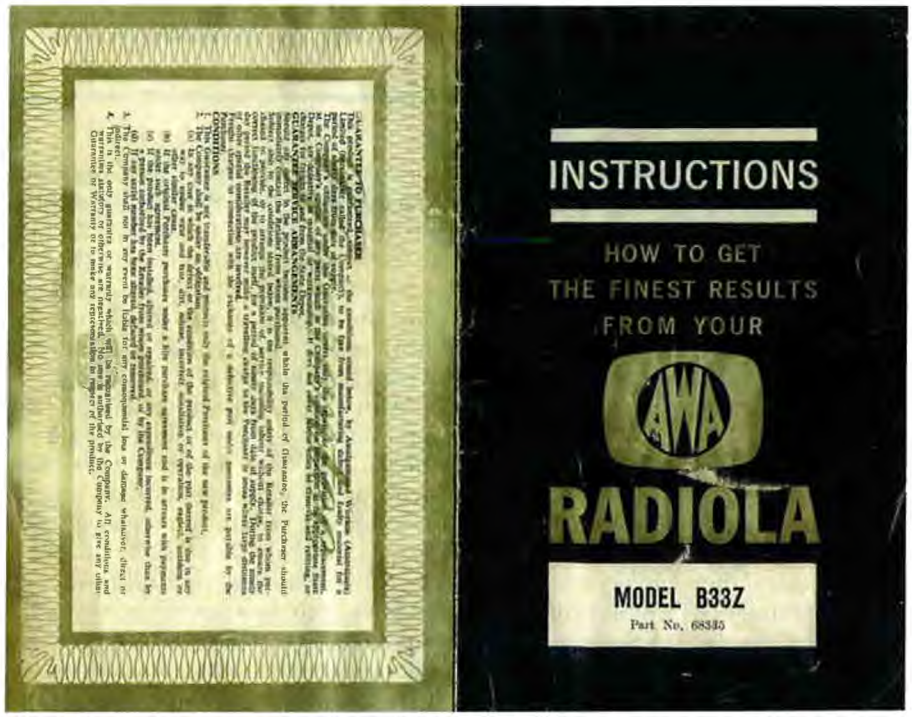

The B33 receiver came complete with its original instruction manual, as well as an external DC power supply.

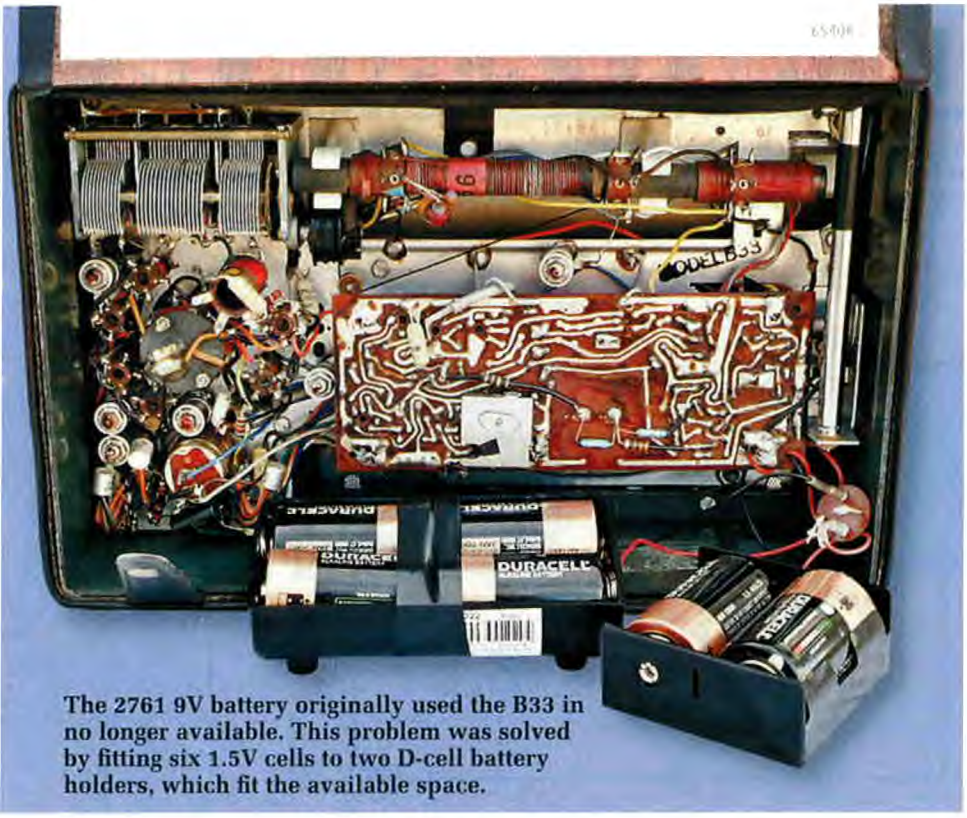

The 2761 9V battery originally used the B33 in no longer available. This problem was solved by fitting six 1.5V cells to two D-cell battery holders, which fit the available space.

the dial drum along the gang's shaft. I then removed the three screws holding the gang to the chassis although this wasn't exactly straightforward – the middle screw couldn't be accessed until I removed the screws from the dial drive assembly and gently swung it aside.

That done, I replaced the drive assembly and gently eased the drum off while I slid the gang out to the right. It came out without the dial cord coming off the main pulleys which was just what I wanted.

Finally, the replacement gang was mounted in position, the drum refitted and the dial cord refitted to the lefthand pulley.

It all worked and this time there were no crackles as I tuned across the band, with stations coming in as expected. However, with a new gang fitted, a complete realignment of all the front-end sections was necessary.

This was done by placing a signal generator on the other side of the workshop, to give a weak signal into the receiver. One problem I struck was that some of the tuned circuits either had too much or too little parallel capacitance across their trimmer capacitors to allow proper peaking at the high-frequency end of the dial. Apart from that, the procedure was straightforward, if a little complicated.

Overall, this set performs quite well, although the second and third harmonics of the IF amplifier, which occur on 910kHz and 1365kHz, do cause some instability in the form of a whistle.

In practice, it is normal for diode detectors to generate harmonics of the fundamental frequency (in this case, 455kHz). However, there is a design deficiency in this set in that the detector output goes to the volume control, which is located right alongside the broadcast-band RF amplifier. As a result, the harmonics from the detector are induced into the broadcast band coils.

To prevent this, I tried inserting a miniature 1.5mH RF choke between C37 and C49 and this noticeably reduced the problem. In fact, with a strong signal, the instability was no longer evident. By contrast, in the B32 broadcast-band only version, only C37 is needed. The front-end layout is somewhat different in that model and the IF harmonic problem is not evident.

Summary

Like the B32 broadcast-band set, the B33 was an expensive receiver. As such, these sets would not have been produced in large numbers.

All receivers that tune from 10-30MHz in one sweep, such as this set, are quite critical to tune. AWA overcame this problem by fitting a small bandspread control, concentric with the main tuning control, and this does make tuning much easier.

On the other had, these sets are difficult to dismantle and align because of their layout. Care also needs to be taken to avoid damaging the tuning gang when the unit is being aligned at the high frequency-ends of the tuning ranges.

In addition, access to the PC board involves desoldering the board from its supports. Perhaps a bit more thought could have been put into making the set easier to service. The much more complicated Barlow Wadley XCR30 (see September, 2002) is simpler to get at, for example, although not easy to align without high-quality equipment.

In summary, this is a set that's well-worth having – especially as it is complete with its instruction manual and a DC power supply (PS9). It now sits alongside its single-band brother in my collection. **SC**