Vintage Radio

By RODNEY CHAMPNESS, VK3UG

The Philips RF5 Stereogram

Now considered to be relics of a bygone era, stereo radiograms (or stereograms) were common during the 1960s. The Philips RF5 stereogram was typical of this new breed of entertainment systems.

IT WASN'T UNTIL towards the end of the valve era that manufacturers finally introduced stereo audio equipment. This resulted in the development of the stereogram, which typically comprised an AM radio receiver, a stereo turntable and stereo power amplifier stages, all built into a stylish wooden cabinet.

The Philips RF5 is typical of many stereo radiograms of the 1960s. As with other units, it featured an AM radio section with a standard converter stage and one stage of IF (intermediate frequency) amplification and detection.

From there, the audio signal is split two ways and fed to identical power amplifier stages which in turn drive the left and right speakers to give the "stereo" effect. Of course, when radio signals are selected, the effect is actually 2-channel mono rather than true stereo. True stereo signals could only be derived by playing 33 RPM stereo microgroove records on the turntable.

In most cases, the speakers were located at opposite ends of the cabinet and so were quite close together. However, some units used a "normal" mono radiogram cabinet and put the second speaker system into a satellite speaker box. This meant that the second speaker could be moved further away for better stereo effect.

Stereo LPs sparked tremendous interest when they were introduced. In fact, older readers will remember the demonstration records that were used to sell the stereo effect. Some even had a recording of a steam train, complete with whistle, thundering through the lounge-room from one side to the other. Another common demonstration effect was a recording of a game of table tennis, in which you could hear the ball being hit first in one speaker then in the other.

We thought that such demonstrations were marvellous at the time. Now they seem old-fashioned and quaint

The Philips RF5 stereogram featured an AM radio and an automatic turntable that could play 33, 45 & 78 RPM records.

in the face of modern 5.1 channel (or more) home-theatre systems with surround sound.

Circuit details

Let's now take a look at the circuit for the Philips RF5 – see Fig.1. It used five valves in total, with two in the radio front-end – a 6AN7 converter and a 6N8 IF amplifier/detector.

The stage based on the 6AN7 converts the received broadcast band signal to the IF (intermediate frequency) which is at 455kHz. This stage is a little unusual in that tuning is accomplished using an inductance tuner instead of the more usual variable capacitor system.

The following 6N8 functions as a combined IF amplifier, detector and automatic gain control (AGC) system. From there, the signal is fed to a 2-section pushbutton-type switch which selects between "Radio" and "Gram" (or gramophone). A third pushbutton switch provides power On/Off selection.

In the "Radio" position, both audio amplifiers have their inputs connected in parallel. By contrast, in the "Gram" position, the two amplifiers are connected to the respective left and right channel outputs from the pick-up cartridge. The amplifier stages are each capable of about 3.5W (RMS) output power.

The two audio amplifier stages are identical and use two 6GW8 triode/pentode valves – one for each channel. The volume control (R51 & R52) is dual-ganged and each section has a tapping which is connected to an RC network. This modifies the tone of the output according to the volume setting.

Potentiometer R18 functions as the balance control, while dual-ganged potentiometer R30/R31 functions as the tone control.

Note that each amplifier stage has an unbypassed cathode resistor on pin 7 of the output valve. This gives a small amount of negative feedback for that stage, with additional feedback for the whole amplifier taken from the speaker transformer and applied via C25, R25 & R13 in the right channel and C26, R24 & R14 in the left channel.

It's fair to say that the audio amplifiers in the Philips RF5 stereogram are a cut above the amplifiers used in the mantel receivers of the era. Apart from the two feedback loops, a decently-sized audio output transformer is used in each channel and the speakers are reasonably well baffled.

This view shows the Garrard record changer and its instruction manual. Not many manuals survive this long. The inbuilt microphone can be seen at the bottom left of the photograph.

If you have one of these units and a speaker or output transformer develops a fault, you may have trouble getting a replacement. The reason for this is that the speakers are high-impedance 800Ω types, rather than the more popular 15Ω units.

Power supply

The power supply is quite conventional and uses a 6V4 rectifier to provide a HT rail of around 255V DC. The filtering is better than normal, with a 3-stage filter made up of C20 (24μF), C21 (50μF) and C22 (50μF).

Karaoke ain't new

The stereogram has another couple of features that a few manufacturers, particularly Kriesler, often incorporated. Karaoke is not just a recent phenomena, as this receiver also had a built-in microphone so that you could sing along with your records.

When operated, the microphone switch places the unit into the mono mode and a preset volume control adjusts the volume to prevent amplifier feedback.

In addition, the set has a socket so that a stereo reel-to-reel tape recorder could be connected into the audio line before the volume controls. This means that tape recordings could be made from either the record player or the radio, depending on which of these two sources was selected.

This radio chassis, shown here before restoration, is accessed by removing the top wooden cover from the cabinet before restoration. Note that the terminal block at bottom right catered for the 240VAC leads to the record changer, as well as the antenna and speaker leads. This means that care must be taken to rewire it correctly if any leads are removed during servicing.

These two features were cheap to provide but just how often such facilities were used is debatable. In practice, they were probably rarely used, just like the shortwave section of most dual-wave radio receivers.

Getting it going

As shown in the lead photo, this particular unit's cabinet is in quite good order. However, the electronic circuitry wasn't working (the set was as dead as a dodo) and the record changer had a few mechanical problems. In fact, the record changer would not go through any of its automatic routines and stayed running until it was manually switched off.

I began by giving the chassis and all other parts a good clean with a brush, to remove the dust. That done, I then had to work out how to get at the electronic circuitry. Initially, I tried to get the chassis out through the back of the cabinet but this proved unsuccessful. I could get at a few plugs, sockets and leads but not at the chassis itself, as it was mounted on top of a shelf.

After looking around the set, I eventually spotted a screw which went from the record changer section and into the side of the section housing the circuitry. I removed it and found that I could then lift the top timber panel up and unhook it from two lugs on the inside of the side panel.

This showed that the circuitry is mounted on two brackets rather than on a conventional chassis. The RF section can be removed but this also means that the dial drive assembly has to be dismantled. As a result, I decided to leave it in place and work on it using a small-tipped soldering iron. The audio amplifier and power supply are similarly difficult to work on but again I decided to leave it in place.

A general check with my high-voltage tester did not reveal any excessive leakage or shorts anywhere that would stop me from trying to run the set. Once it was going properly, I could then replace any leaky capacitors in critical places. That said, this set has quite a sprinkling of polyester capacitors and these rarely show signs of leakage resistance.

The set has a 3-core power lead and it's always a good idea to first check that the earth wire in particular is not broken. That's done simply by connecting a multimeter (set to a low ohms range) between the set's chassis and the earth pin of the 3-pin plug. If all appears OK, try flexing the lead, particularly around the plug which is where breaks often occur. Replace the lead if the multimeter reading "flicks" upwards or indicates an open circuit when the lead is flexed.

That done, the set was connected to power and turned on. The dial lights and the valve heaters worked but nothing else. A quick check with a multimeter revealed HT voltage on capacitor C22 but there was nothing on C21. It wasn't hard to find the reason – series resistor R23 was completely open circuit.

A replacement resistor was quickly fitted and that fixed the problem – HT voltage now came up across C21 and the set burst into life. It sounded good too and the overall sensitivity of the receiver was quite reasonable.

Cleaning the valves

Now that the set was working, I switched it off, removed all the valves and washed them in soapy water. This has to be done carefully, so that you don't rub the type numbers off the valves. They were then rinsed in clean water and allowed to dry standing upright.

Next, the valve sockets were sprayed with Inox (a cleaning lubricant), as were the variable controls and the switches. The dial mechanism was then oiled with light machine oil, after which the valves were replaced and the set put through its paces. All appeared well, so the set was left running to make sure no intermittent faults were lurking in the works.

This set uses polyester capacitors in most critical areas but not for the AGC bypass capacitor (C10). Instead, this was a paper capacitor and it tested leaky (5MΩ), which meant that it had to be replaced. This involves undoing three screws on the underside of the RF sub-assembly and then tilting the assembly sufficiently to gain access to the capacitor's leads. However, this must be done carefully, as the dial assembly is also attached to this sub-assembly. A 50V ceramic capacitor was installed in place of the original unit.

Record changer

The record changer used in the Philips RF5 is a Garrard Autoslim unit. As mentioned above, it would not go through any of its automatic operations and the reason for this was quite simple. Over time, much of the oil and grease that's used to lubricate the mechanical parts had either congealed into sticky "globs" impregnated with

dust or had disappeared altogether, leaving a lot of moving parts without lubrication.

In order to clean away the old lubrication, the mechanism must first be removed from the cabinet and placed on a servicing jig so that its operation can be observed. Fortunately, it's not difficult to get the changer out.

First, you unplug the audio leads and disconnect the mains power lead from a terminal block at the rear of the receiver chassis plate. That done, the toggles that keep the changer in the cabinet are twisted so that they lay along the axis of the screw through the changer baseplate. The changer can then be lifted straight out of the cabinet and placed onto the servicing jig.

Having done this, I removed the platter and turntable. The latter is released by first sliding off the retaining circlip, then twisting the turntable gently clockwise while lifting it upwards until it clears the centre post. There is virtually nothing that can go wrong with this and it was simply cleaned and the phosphor bronze bearings oiled.

Next, I removed the motor from its resilient mounts by removing the three circlips holding it in place. The motor freely rotated, so there was no problem here. However, the felt wicks which hold oil for the phosphor bronze motor bearings were dry so I filled them with oil using a syringe-type "oiler". The motor was then reinstalled.

That done, a drop of oil was applied to the top of the phosphor bronze bearing on the idler (jockey) wheel. This is the large rubber wheel on the left of the photograph on the following page. Its purpose is to make contact with the inside rim of the turntable, to drive the turntable at the appropriate speed. In operation, the speed control varies its position vertically against a stepped-diameter pulley attached to the motor, depending on the speed of the record to be played (ie, the speed of the turntable depends on the pulley-diameter selected by the idler wheel).

Next, a large gear on one side of the mechanism was removed, again by removing its circlip (this is the gear on the righthand side of the photograph of the turntable's "works"). In this case, the grease on the cam on the underside of the gear had congealed and one of the small ancillary levers had seized due to lack of oil. I soaked this gear assembly in household kerosene, then cleaned the muck off and removed the small lever from its shaft by removing two more circlips. I then cleaned and oiled the shaft and replaced the lever, which now operated freely.

Finally, I greased and oiled the remaining cams as appropriate and reassembled the unit. The turntable and platter were the last parts to go on.

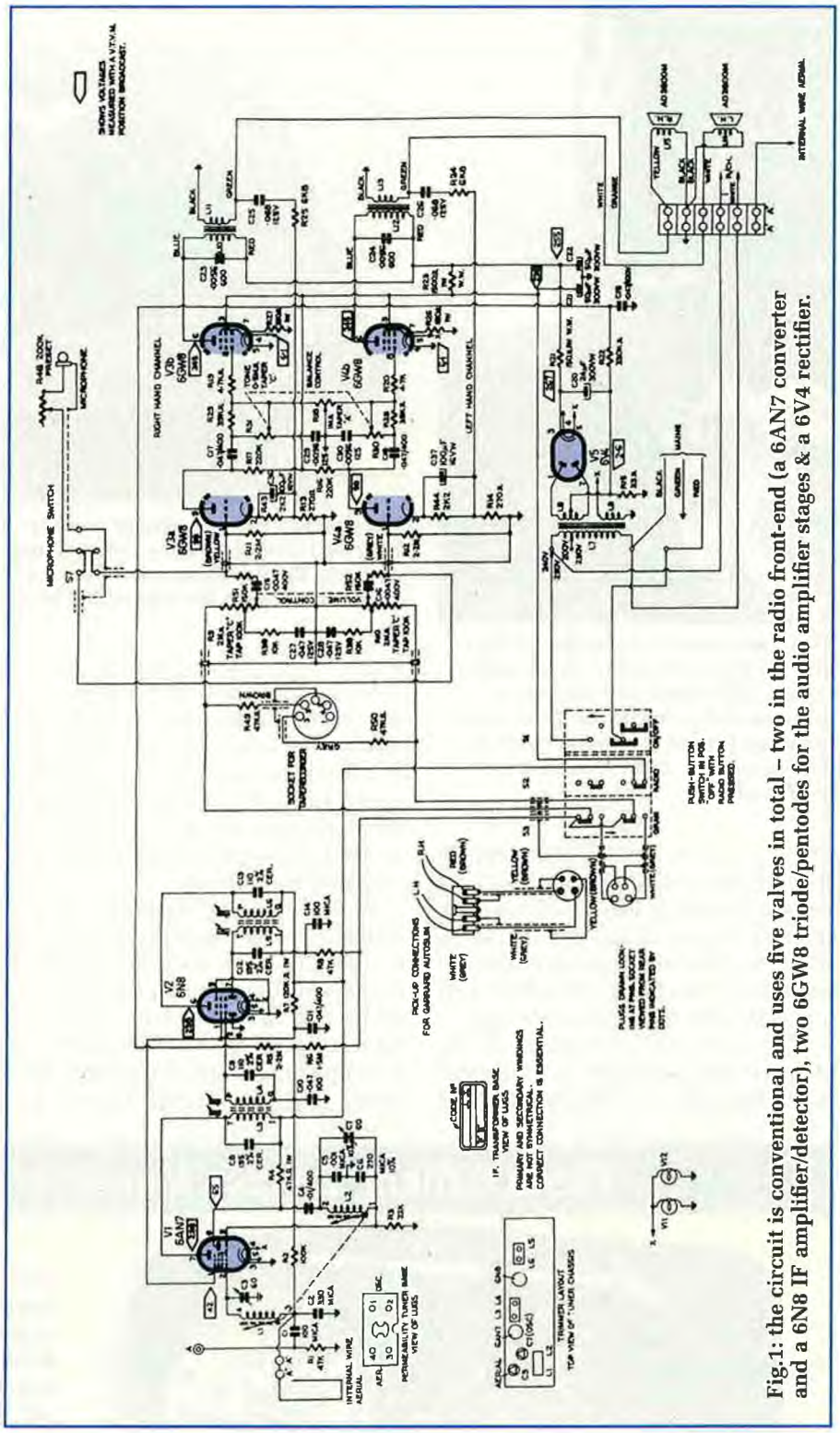

Fig.1: the circuit is conventional and uses five valves in total – two in the radio front-end (a 6AN7 converter and a 6N8 IF amplifier/detector), two 6GW8 triode/pentodes for the audio amplifier stages & a 6V4 rectifier.

The turntable is installed by carefully lowering it over the centre post/shaft while rotating it clockwise, until it settles into position. It's important to only rotate it clockwise, otherwise damage can be done to the idler wheel.

Final adjustments

Once the turntable was back in

This underneath view of the pickup arm shows the locations of the stylus weight adjustment and the stylus drop position adjustment. A turnover cartridge is used so that both 33/45 RPM records & 78 RPM records can be played.

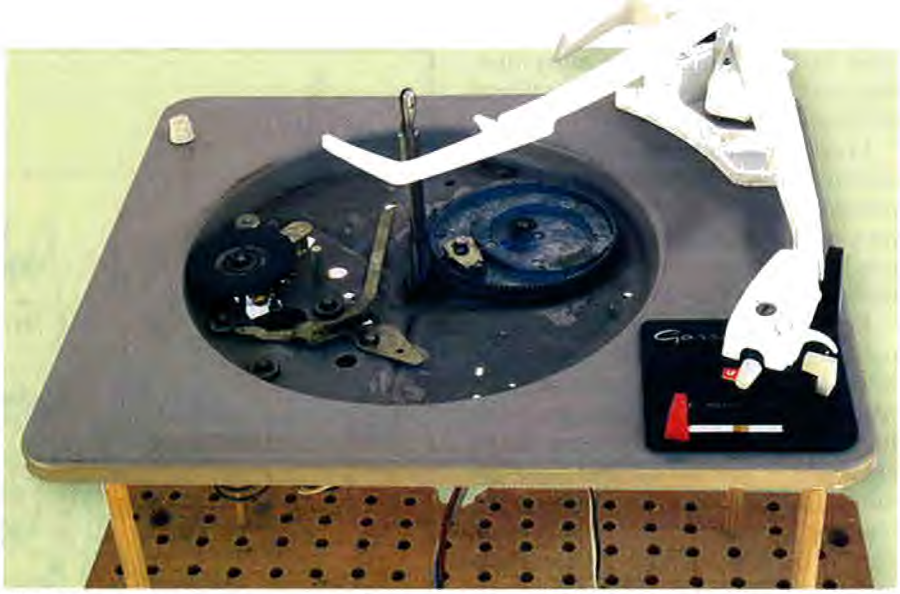

The Garrard record changer is shown here mounted on a simple servicing jig, with its turntable platter removed to give access to part of the mechanism. The servicing jig is nothing more than a drilled wooden base which accepts wooden dowels to support the turntable's base.

place, I gave it a quick checkout on the test jig, to ensure everything was working properly. First, I adjusted the tracking weight of the stylus (this is done by adjusting a spring under the tonearm), then checked that it tracked a record correctly without skating.

That done, the operation of the changer was observed in automatic mode. In particular, I checked that the stylus dropped down onto the record in the correct position; ie, in the middle of the run in track (if it doesn't, this can be corrected by adjusting a horizontal screw near the tonearm pivot). I also checked that the tonearm lifted off correctly when it reached the run out at the end of the record and returned to its stand.

By the way, most automatic record changers are designed to play up to six records in a stack. As a result, there is a cam adjustment under the turntable which sets the height to which the tonearm rises to ensure it will clear a complete stack on the platter. This rarely gets out of adjustment, so I didn't bother to check it.

Finally, I decided to replace the two styli for the turnover cartridge. Microgroove records require a 1 mil (.001-inch) radius stylus, while 78s require a 2.5 mil stylus. Unfortunately, I'm having trouble tracking down the 78 RPM stylus, so I've simply replaced the microgroove (33/45 RPM) stylus for the time being.

Summary

The Philips RF5 stereo radiogram is typical of the era. It delivers reasonable quality from the audio section and the RF section has good sensitivity if used with a fairly short antenna. SC

Photo Gallery: Eclipse Monarch AN (1946)

MANUFACTURED BY Eclipse Radio, Melbourne in 1946, the Monarch AN is a 5-valve superhet and is similar to the companion Astor model that uses the same chassis. It was housed in a stylish bakelite cabinet with a large circular dial towards the right and the three control knobs spaced along the bottom.

The valve line-up was as follows: 6A8-G frequency changer; 6U7-G IF amplifier; 6B6-G, audio amplifier/detector/ AVC rectifier; 6V6-G audio output; and 80 rectifier.

Photo: Historical Radio Society of Australia, Inc.