Vintage Radio

By RODNEY CHAMPNESS, VK3UG

Nazi Germany's Peoples' Radio (Volksempfaenger)

During the 1930s, radio broadcasts served as an important propaganda tool. It was also the era of The Great Depression, so not many people could afford high-priced radios. Nazi Germany's answer was a series of simple, low-cost "austerity" models.

When Adolf Hitler's National Socialist Party (NSP) came to power in Germany in 1933, things quickly changed – much of it for the worse – in the depression-gripped country.

Radio receivers were a luxury item in Germany at that stage, as the manufacturers ran a price-fixing cartel. However, the NSP soon realised that radio could be a powerful propaganda tool and so a cheap radio that the average household could afford was needed.

However, they could also see that the average domestic radio of the day could pick up good-quality signals from adjoining countries. As a result, counter propaganda from these adjacent countries could cause German listeners to question what they were being told by the Nazis.

The tuning dial in the DKE38 carries numbers rather than station markings. Note the Nazi emblem with the swastika and eagle immediately above the dial.

So the Nazis they faced a dilemma. How could they encourage people to buy sets and listen to German radio broadcasts but not to broadcasts from neighbouring countries?

The solution was simple – keeping the price down so that the general population could afford the sets inevitably meant that they would be simple low-performance receivers. Their performance would be inferior to the more expensive sets, so the chances of them picking up good-quality broadcasts from other countries would be minimised.

To make absolutely sure that people only listened to German broadcasts, a label would be placed on the sets stating the following: "Be aware – listening to transmissions from across the border is a breach against the national security of our people. By declaration of the Fuhrer, it will be punished with severe jail sentences." Later in the war, the penalty for listening to "unapproved" radio stations was increased to death in some instances!

There were of course other more practical problems to be solved before the "Peoples' Radio" could become a reality. Unemployment was high in Germany in 1933 and flooding the market with cheap radios could cause many of the established radio manufacturing firms to collapse as sales of their high-priced receivers dwindled.

The NSP did not want more unemployment, so they asked a consortium of existing radio manufacturers to design a cheap, simple receiver. All manufacturers would then be directed to make these low-performance sets. And because the sets would be so basic, it was hoped that they would not

take sales away from the good-quality, higher-priced receivers.

The Volksempfaenger & the Deutscher Kleinempfaenger

The first of these receivers was designed and built in 1933 as the model VE301. The "VE" stands for (V)olks(e)mpfaenger, while the "301" referred to the date Hitler became Chancellor of the Third Reich (ie, 30/1/1933). There are several variations on the meaning of the name, but the most common is "Peoples' Radio". Later the DKE ((D)eutscher (K)lein(e)mpfaenger) series was produced. The most common translation of this name is "German Small Receiver".

Subsequently, during the Hitler years from 1933-1945, at least 20 variations of the "People's Radio" were produced. Most models were designed to be used on mains voltages, either AC or DC, in the range 110-240V. However, some sets were designed to run exclusively on DC mains, while others ran exclusively on AC mains. Battery powered variants were also made for people located away from reticulated mains power.

It's worth noting that as time progressed, the original designs became even simpler. This was due to the manufacturers taking innovative steps to cut costs without impairing the performance of the receivers.

Evolution

The first AC mains-powered model, the VE301W, used a transformer, which isolated the mains from the circuitry. An RGN354 rectifier was used in a slightly unusual circuit to provide 240V DC to the valve anodes, while an REN904 triode valve was used as a regenerative detector. The regeneration control consisted of a 180pF variable capacitor which was connected from the plate of the valve to the feedback winding on the single tuning coil.

In practice, the set would tune both long-wave (150-375kHz) and medium wave (500-1600kHz) frequencies over two bands. The changeover from band to band was accomplished via the tuning control. When a band change took place, the antenna tappings had to be changed as well.

The audio output from the regenerative detector was then coupled through a 1:4 (step-up) interstage transformer.

The DKE38 was quite bland in appearance. The three controls (from left to right) are: aerial coupling, tuning (and band change) and regeneration.

This is the view inside the DKE38. The loudspeaker dominates the cabinet.

This fed a directly-heated RES164 pentode audio output stage, which in turn fed a high-impedance reed speaker. The claimed sensitivity of the receiver was 1.5mV and the power consumption was stated as 21W.

The first DC mains receiver was the model VE301G. Because it ran

The DKE38 is a transformerless AC/DC set and most of the parts run at lethal voltages. The 3-core mains lead (with the earth lead cut short) is a "ring-in". Note that tying a knot to anchor the mains cord (as shown here) is now illegal.

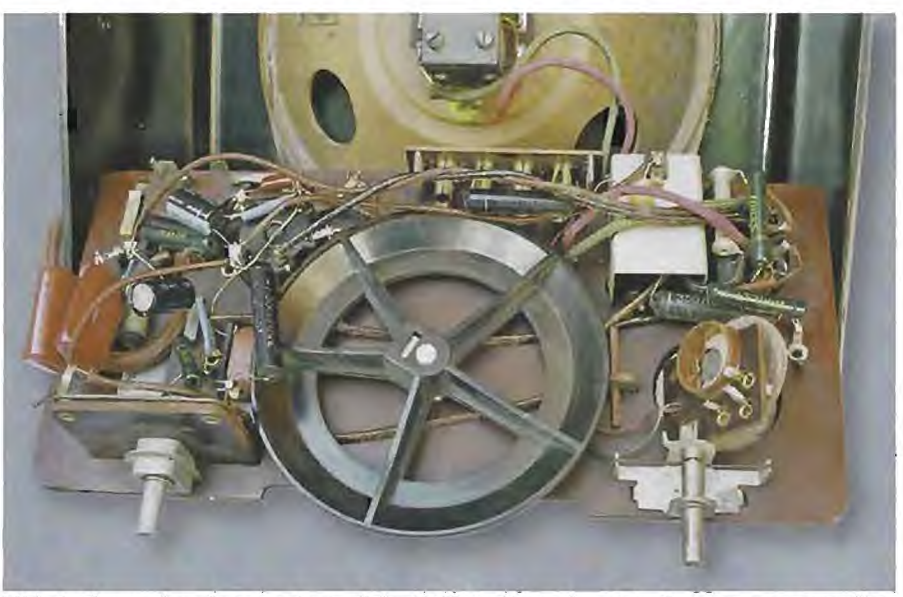

This is the under-chassis view of the DKE38. Note the swinging antenna coupling at right. The modern capacitor replacements at left look out of place.

from DC, this had neither a power transformer nor a rectifier. The valve line-up differed from the VE301W as well, the VE301G using a REN1821 and a REN1823a.

In this unit, the valve heaters were connected in series across a 110V supply, while a tapped resistor was added in series with the heaters for higher DC supply voltages. Any rapid irregularities in the supply voltage were filtered using a conventional pi-type filter network consisting of two 4μF capacitors across the mains and an iron-cored choke between the capacitors on the positive line. As might be expected, the overall circuit configuration was virtually identical to that used in the VE301W.

The DKE38

The DKE38 made its appearance some five years later, in 1938. The innovation that had taken place in those five years was quite obvious – it was a cheaper, simpler and capable of operating on either AC or DC mains in the range from 110-240V.

This set used two valves – a VY2 rectifier and a VCL11 triode/tetrode. There was still the same filtering arrangement on the mains as used in the VE301G but there was no power transformer. In addition, the interstage audio transformer was done away with and an RC network (which was cheaper) installed in its place.

The antenna connection system was also simpler than in the original sets and it was not usually necessary to alter the antenna tappings when changing bands. Another feature of the receiver was negative feedback between the plates of both stages.

All of this simplification did not come at the expense of sensitivity which was specified at 1mW. The set's power consumption was just 15W.

Inside the DKE38

One of these DKE38 German People's radios was on display during the HRSA's recent 25th anniversary celebrations and I was able to take a good look at it. This receiver is quite obviously an austerity model, as it is very much a "plain Jane".

The controls from the left to right are: aerial coupling, tuning (and band change) and regeneration. There is no volume control as such, probably because the receiver isn't particularly sensitive, plus the regeneration and aerial coupling can achieve a measure of volume control, albeit with some degradation of the set's performance.

An interesting omission is the lack of protection for the speaker, unlike Australian-built sets of the same era which had bars as part of the Bakelite cabinet moulding. In addition, the tuning dial only has numbers on it, rather than the station markings.

There was one other interesting feature here – just above the tuning control was an emblem displaying an eagle and a swastika. Did the German people really need reminding of the regime they lived under!

The rear of the set is completely covered with a perforated pressed-cardboard panel. This panel also carries a few instructions and has information on attaching antennas and an earth to the set.

Of course, it is necessary that this cover remain in place, as the DKE38 is a "hot chassis" unit. In other words, mains voltages are present just about everywhere inside the set.

In fact, a set like this should only be operated with all covers on or via an isolation transformer. An isolation transformer, for those unfamiliar with them, is used to isolate a receiver's

circuitry from the mains, to make it safer to work on. However, that is not an invitation to be careless.

The rear panel also carries what appears to be the remnants of the mains on-off switch (near where the power lead enters the receiver). This is no longer in use in this particular set.

The set's cabinet is reasonably large, considering how little it houses. It measures 24cm high x 24cm wide x 12cm deep and the loudspeaker is the dominant part. The complete unit weighs just 2kg, which is very light.

Removing the back cover shows just how simple this set is. On top of the chassis are two valves, a couple of filter capacitors, a tapped wirewound resistor, a coil, a small filter choke, the tuning capacitor and a fuse. The loudspeaker is attached to the inside front of the cabinet.

Removing the chassis from the case involves removing two knobs at the front and two screws towards the rear of the set. Turning it over shows that the underside of the chassis carries only a handful of components. Even here, there is Nazi propaganda – most of the original components had the eagle and the swastika marked on them.

Unlike other sets of the era, the chassis is made from a phenolic type material. This not only acts as a chassis but also as an insulator for the various components. Apparently, the shielding benefits of a metal chassis were considered unnecessary in a low-cost set such as this, although some "hand capacitance" effects would probably have been evident when tuning.

In particular, this could have caused detuning effects or loss of sensitivity during tuning. It may even have caused the set to go into oscillation in some circumstances.

The loudspeaker is around 200mm in diameter, which is quite large for such a simple set. However, a large speaker would be more sensitive and would give greater volume than a smaller unit. An additional advantage was that the set was so big that it could not easily be hidden, so the eagle and swastika would always be on display.

One unique feature of the speaker is that its frame is made of compressed cardboard. No doubt it was treated and sealed so that it did not absorb moisture, otherwise it would have quickly distorted and caused the speaker to malfunction. But why make the speaker frame out of cardboard? The answer is that Germany needed all its steel for use by the military, so these sets used the minimum amount of metal in their construction.

Because it is a "hot-chassis" set, the rear of the DKE38 is completely covered with a perforated pressed-cardboard panel.

A bird's-eye view of the top of the chassis. To keep costs down, the chassis was made of a phenolic-type material rather than metal.

Circuit details

Fig.1 shows the circuit of the DKE38. The first stage functions as a regenerative detector and it tunes both the long-wave and the medium-wave broadcasting bands. Shortwave was not included, since the aim was to prevent users tuning to distant stations instead of listening to broadcasts from the Nazi propaganda machine.

As shown in Fig.1, the antenna input

Photo Gallery: Aimaster TRF Console (1931)

MANUFACTURED BY TARGAN ELECTRIC PTY LTD (MELBOURNE) in 1931, this 3-valve TRF console receiver was fitted with an 8-inch (20cm) electrodynamic speaker and was housed in a long-legged wooden cabinet, a style that was popular during that era.

The valve line-up was as follows: E442 detector; B443 audio output; and 280 rectifier. Photo: Historical Radio Society of Australia, Inc.

consists of three input points to allow for different sized antennas. However, sets with low sensitivity require both an antenna and an earth if they are to work effectively, so an earth terminal was also provided.

The input coil is physically isolated from the rest of the circuit to make sure that it does not operate at mains potential. In practice, a swinging-coil arrangement is used to alter the coupling of the input antenna coil to the tuned winding to optimise reception.

The tuned circuit is a conventional regenerative arrangement for a triode detector. The regeneration (reaction) is controlled by 180pF variable capacitor, while a 320pF variable capacitor takes care of the tuning. Note that this tuning capacitor is capable of rotating a full 360° – the first 180° tunes one band, while continued rotation through the second 180° either switches the second secondary winding in or out to tune the second band. This is achieved using a cam, which in turn actuates the switching (a very nifty idea).

The detector stage is RC coupled to the audio output stage. This is also quite conventional, although it is interesting to see that negative feedback is provided between the plates of the two valve sections. A 600Ω adjustable resistor provides the bias for the audio output stage valve and was probably adjusted in the factory when the radio was set to operate on 110, 150 or 240V. The plate voltage will vary depending on what mains voltage is available, hence the bias would also need adjustment.

The speaker is a high-impedance (balanced armature) type which saves using a speaker transformer.

Power supply

The power supply is similar to that used in many AC/DC type sets. The circuit shows that the mains is switched in both leads but in reality, this probably consisted of a linking system that was broken if the back of the set was removed. However, I can't be sure of this, as this mechanism is incomplete in this particular receiver.

As shown, one side goes through a fuse and is followed by an adjustable 600Ω resistor. This then provides the common "earthy" line for the circuit. On the other line, the voltage dropping resistor to the heaters of the two valves is selected using a "wander" lead. This is then followed by the 30V 50mA heater of the VY2 rectifier and the 90V 50mA heater for the VCL11 triode/tetrode valve before going back to the other side of the mains.

One side of the mains is also applied directly to the plate of the VY2 rectifier. The rectified output is taken from the cathode and is fed to the filter network consisting of two 4µF capacitors and an iron-cored choke in a pi filter network. A 10nF capacitor is also wired across the VY2 rectifier to get rid of any high-frequency spikes.

In view of its low-cost design philosophy, it initially puzzled me that an iron-cored choke was used in the filter network instead of the simpler and cheaper resistor option used in later domestic radios. In the end, I concluded that they couldn't use a resistor because the voltage drop across a resistor that was effective enough to act as a filter element would have been too great. In fact, the audio output with a 110V supply is down to just 0.25W, increasing to 1.2W on 240V.

High-value electrolytic capacitors were not available in those days either, so the iron-cored choke was a necessity.

Miscellaneous

The DKE38 receiver was certainly made of lightweight materials, the speaker drive mechanism and the filter choke being the only components with windings and a metal core.

It's an interesting receiver, if only for

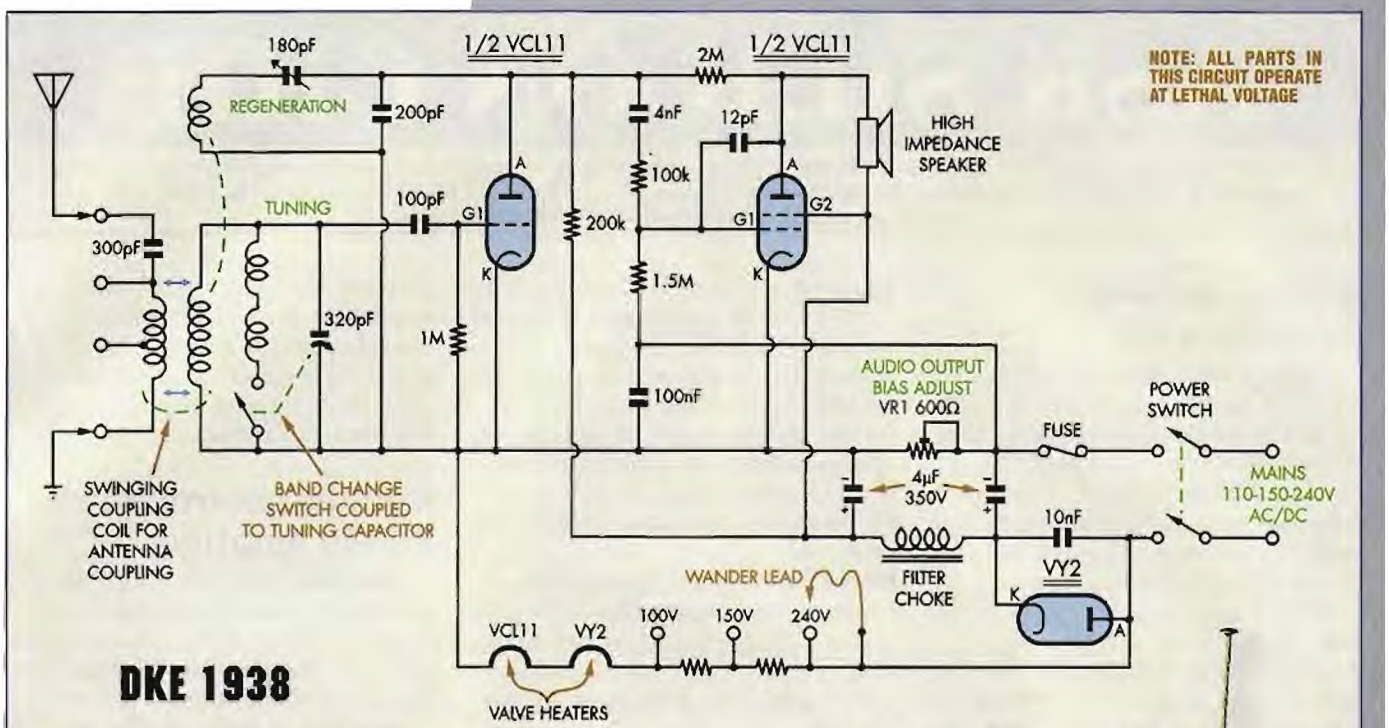

Fig.1: the circuit of the DKE38. The first stage functions as a regenerative detector, while the second stage is the audio amplifier. Note that all parts in this circuit, except for the antenna input circuit, operate at lethal voltages.

its design philosophy. It's also interesting to note that the Telefunken VY2 and the VCL11 valves were designed specifically for the German Peoples' Radios.

Other countries also produced "austerity type" radios, one example being the Austrian R2 set of 1939 – see photo. It wasn't as austere as the German set though, as the R2 was a 6-valve superhet which covered the long-wave, medium-wave and short-wave bands. The German army later used this model extensively.

Britain also had its own equivalent. Called the "Utility Receiver", it was built by various manufacturers to a government-approved standard. Basically, it was an austerity model that used standard components and a simple design to economise on scarce raw materials and to make repair easier.

However, despite its simple design, it was quite capable of picking up the Nazi broadcasts, a practice that was discouraged but not forbidden.

The Austrian-made R2 is a 6-valve multi-band superhet that was used extensively by the German army during WW2.

Summary

The set featured in this article was obtained by its current owner, Ian Johnston, after a previous owner had carried out some "restoration" work. Unfortunately, that owner had not taken the time to disguise several new components inside the old component cases and the new parts look out of place in the chassis.

The mains lead was also replaced with a 3-core item, which is out of place on such a set since the earth lead is just cut off anyway! In fact, using a twin lead and an isolation transformer is the safest way of running an AC/DC receiver like this.

Even so, a high-voltage insulation test between the antenna/earth connections and the mains should be carried out before even trying to use a set like this, in case of an insulation breakdown. These old AC/DC sets can be death traps for the unwary! SC