Vintage Radio

By RODNEY CHAMPNESS, VK3UG

The Astor DL 4-valve mantel receiver

An austerity model for the post-war era

The Astor DL is a little broadcast-band 4-valve mantel receiver that's housed in a bakelite case. The circuit is quite simple but it still had quite a few challenges in store for me.

A FELLOW CLUB member recently decided to tackle the restoration of an old Astor DL 4-valve receiver for a friend of his. He began by cleaning the set and then replacing any parts that, based on experience, were likely to be faulty or which might give trouble later on. The replacement parts were fitted in exactly the same places as the originals, to conform to the original layout. This is always a good idea unless you are very experienced. Deviating from the original layout can lead to instability and other problems.

However, despite his careful work, my friend ran into all sorts of problems with this set, particularly with microphonics and instability. We'll take a closer look at the work he did and the steps we took to overcome the problems later on. First though, let's take a look at the circuit.

Circuit details

The Astor DL is one of the few sets not featured in the Australian Official Radio Service Manuals (AORSM) and so few restorers have any information on this set. However, I was fortunate enough to have a copy of "Those 'Missing' Radio Services Manuals", 1939-1942, which was compiled by the late Ray Kelly. It also has some service data on a few 1947 receivers that were missed in the AORSMs and the Astor DL is included. Without the circuit, I could have been chasing my tail sorting out the problems in this set for quite some time.

Fig.1 shows the circuit details. As can be seen, the antenna circuit uses both capacitive top-coupling and inductive coupling to the tuned secondary winding. The tuned signal is applied to the signal grid of a 6A8G valve which functions as the converter (ie, mixer and local oscillator). The oscillator tuned circuit (bottom left of Fig.1) operates 455kHz higher than the tuned signal and mixing these signals produces the 455kHz IF (intermediate frequency) signal (along with others).

This 455kHz IF signal is applied to the first IF transformer (37) which is tuned to 455kHz. It is then applied to a 6B8G IF amplifier stage after which it is fed to the detector and AGC diodes in the 6B8G envelope. The detected (or demodulated) audio signal appears across the associated 0.5MΩ resistor (23).

From there, the audio signal is fed via a 0.05µF (50nF) capacitor (6) to a 6V6G audio output valve, then to the speaker transformer and finally to the loudspeaker. Astor were renowned for their complex and quite effective tone-cum-negative feedback circuits but in this receiver, this circuitry is missing and has been replaced with a very simple negative feedback system.

This consists of taking the cathode

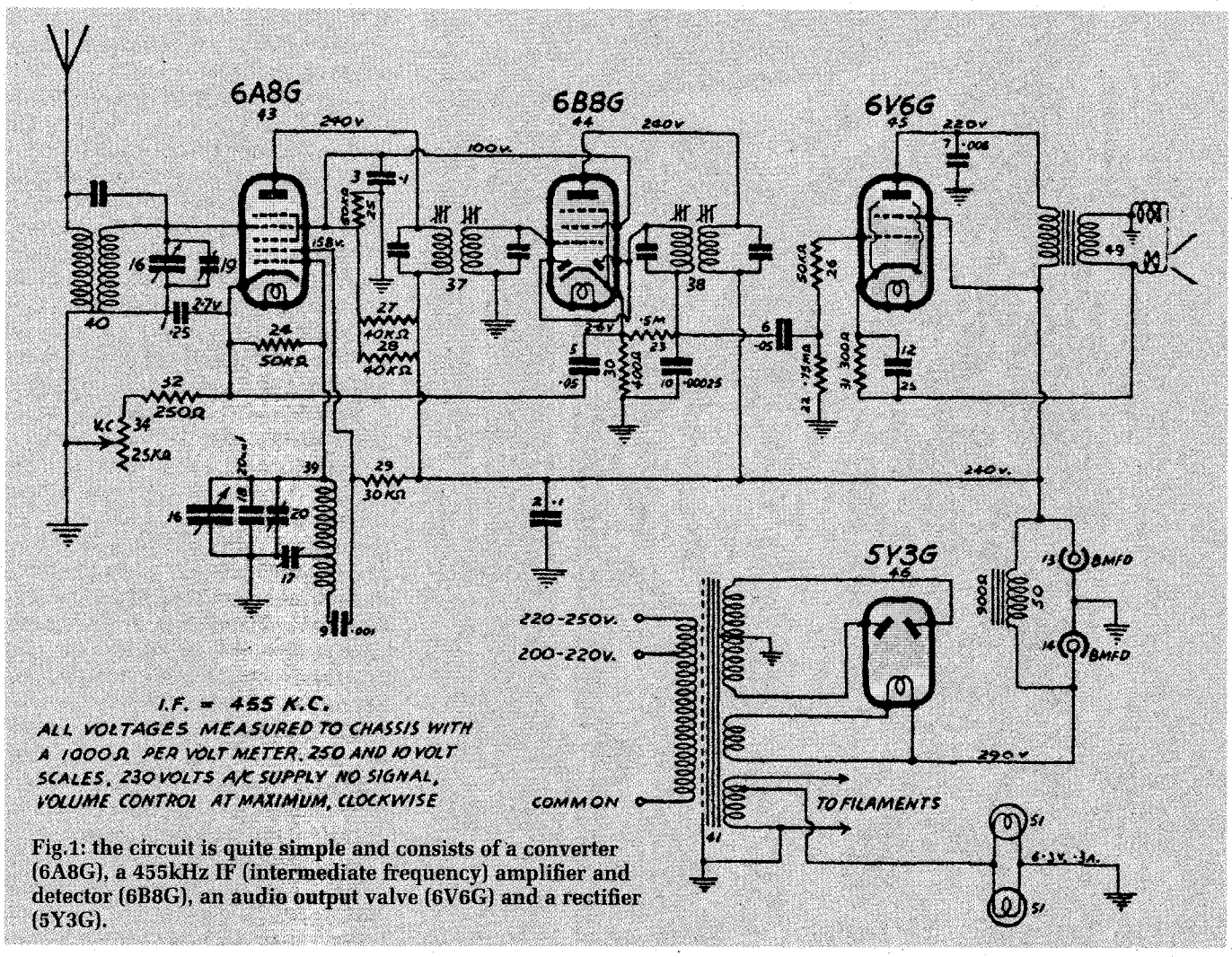

Fig.1: the circuit is quite simple and consists of a converter (6A8G), a 455kHz IF (intermediate frequency) amplifier and detector (6B8G), an audio output valve (6V6G) and a rectifier (5Y3G).

return of the 6V6G to earth via the voice coil of the speaker. It gives around 3dB of negative feedback which is probably all that could be tolerated in a set with only one audio stage. Any more and the volume would have been unacceptably low on weaker stations.

It's puzzling as to why Astor didn't take the 300Ω cathode resistor (31) straight to the chassis and simply connect the 25μF electrolytic capacitor (12) to the voice coil. The feedback would have been almost the same but with no DC current through the voice coil. This would mean that the cone would rest in its natural position instead of being biased away from this neutral point.

In theory, the DC offset in the Astor DL will restrict the volume that can be reached without undue distortion. However, since there's only one audio stage and the volume is limited anyway, it really did not matter in this receiver.

The volume is controlled by using a 25kΩ potentiometer (34) to vary the cathode resistance on the 6A8G converter valve. This effectively varies the bias to the signal grid of the valve. The oscillator section is not affected, as its bias is developed across an oscillator grid resistor (24) of 50kΩ and is not reliant on the cathode-to-earth voltage.

When the receiver is operating at full volume, the wiper of the 25kΩ pot will be at the end attached to the 250Ω fixed cathode resistor. Conversely, winding the pot the other way (ie, to minimum volume) gives the maximum series resistance and the signal grid section of the valve will be biased off. As a result, there is little or no audio output from the receiver (this will depend on the individual characteristics of the particular valve in use).

As mentioned in the recent articles on automatic gain control (AGC), it really is difficult to understand why AGC was omitted from so many designs. More up-market receivers from the same manufacturers and of the same vintage had AGC as a matter of course and in this receiver it would have been easy and cheap to include it.

Of course, it's possible that some manufacturers deliberately omitted AGC from their cheaper receivers in order to make it a selling point in their more expensive sets!

Power supply circuitry

Power is supplied to the receiver via a mains transformer, while a 5Y3G rectifies the output from the centre-tapped HT winding. Note that the primary is tapped so that the receiver can be used with any 50Hz AC supply from 200-250VAC.

The two plates of the 5Y3G are connected to either end of the HT secondary winding, while the centre-tap goes to chassis. The HT output is then taken from the heater and applied to a filter network consisting of a choke (or inductor) and two 8μF electrolytic capacitors (one on either side). These

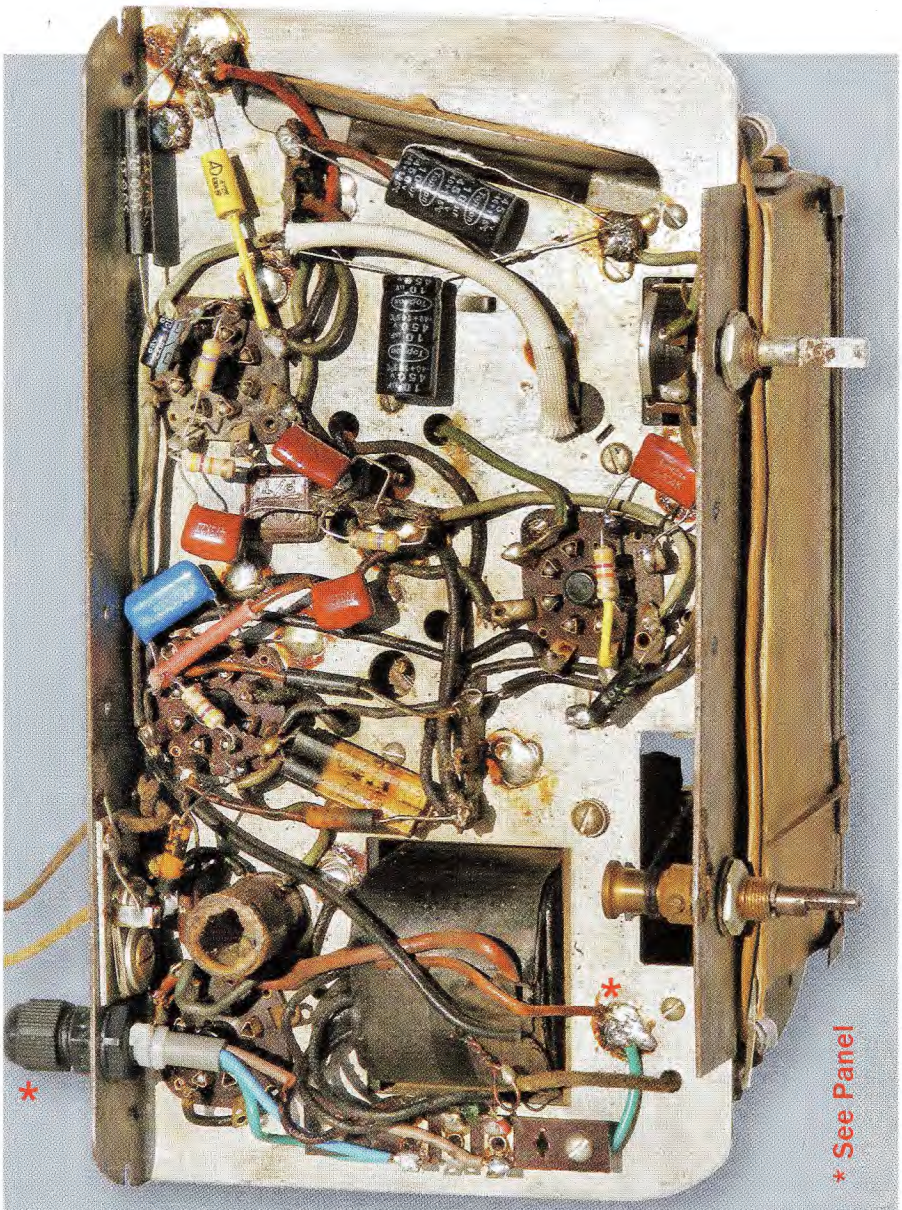

This view shows the underside of the chassis minus the metal shield for the 6B8G IF stage. Note the proximity of the mains connections to the edge of the chassis. By the way, we don't recommend using a cable gland to secure the mains lead, nor do we recommend soldering the mains Earth lead directly to the chassis (see panel for more details).

provide the necessary ripple filtering on the HT line.

The transformer also has two filament windings – a 5V winding for the 5Y3G rectifier and a 6.3V winding for the remaining valve heaters. The dial lamps are fed from a tap on the 6.3V winding. As a result, around 5V is applied to the lamps which means that they will last longer than if the full 6.3V was applied.

Note that the three valves in the signal chain (6A8G, 6B8G & 7V6G) all use cathode bias. This circuit technique was common from the 1930s-50s but was generally superseded by back bias in the 1960s, as this was both simpler and cheaper. Back bias did have one disadvantage though – checking the current through each individual valve by measuring the voltage drop across the cathode resistor was no longer possible.

Physical details

As can be seen from the photos, a small brown bakelite cabinet was used to house the Astor DL chassis. Indeed, this same cabinet style was used for many 4-valve Astor sets.

In terms of appearance, it is quite an appealing little receiver with a large dial scale. This dial scale has no slots in it, unlike many other dial scales. As a result, the speaker is mounted at the lefthand end of the chassis and faces out to one side.

The dial scale uses a normal "slide type" pointer system and works well. The drive mechanism uses a drive shaft with two or three turns of dial cord wound around it and then connected to the pointer and a dial drum.

The chassis is easily removed from the cabinet. First, the four screws holding the Masonite back on the set are removed, then the two control knobs and finally the two retaining screws that attach the back edge of the chassis to the cabinet. The set can then be slid out of the cabinet.

That done, the first thing to note is that the power supply and the converter stage of the receiver are intermingled. As a result, it is necessary to be sure which part of the circuit is being worked on. A problem that was experienced later on made us wonder if some unwanted interaction was taking place between these two sections but more of that later.

The loudspeaker and its transformer are mounted at the other end of the chassis to the power supply. This is good practice as it minimises any hum induction into the speaker transformer from the power transformer. The IF valve is near the front of the chassis, making it difficult to access when the chassis is in the cabinet. In addition, the "up-in-the-air" mounting arrangement for the antenna coil makes it vulnerable to damage when the set is being serviced or restored.

The under-chassis parts are all easily accessed, although the 6B8G has a shield over the socket to minimise any IF feedback that could lead to instability. **One thing you do have to be mindful of when tipping the chassis over for service is that the mains terminations are easily touched, since they are quite close to the edge of the chassis.** If the set is connected to power, then it's all too easy to receive a potentially fatal electric shock.

My advice is to always disconnect such sets from the wall socket when turning them over to avoid such risk. In addition, you should always use a residual current device (RCD) protected power socket when servicing old radio sets. That way, if you do make accidental contact with the mains, there is less chance of electrocution.

In my opinion, Astor should have covered the transformer mains wir-

ing terminals for safety reasons. They should also have positioned the antenna coil better so it could not be so easily damaged during service.

Cleaning the cabinet

The cabinet and the knobs were in quite good condition and only required cleaning. First, the cabinet was washed with soapy water, taking care not to get the dial scale wet. The knobs were then cleaned in the same way, with a nailbrush used to clean the grime from between the flutes.

Finally, the cabinet was rubbed over using automotive cut and polish compound and this brought out its original lustre. It now looks almost as good as new.

Chassis restoration

My friend had done a considerable amount of work on the old Astor before seeking my help with some stubborn technical problems. First, all accessible areas of the chassis had been carefully cleaned with a small wire brush and it now looks quite shiny in those places.

Unfortunately though, someone before him had tried cleaning the back of the dial scale with the result that some of the markings had been removed. This is a job that must always be approached with caution. Some station and frequency identifications on dial scales are firmly attached but many are now only just sitting there, waiting to fall off if they are touched.

Since first making that same mistake many years ago, I now always test-clean an inconspicuous area to see how well the markings are attached to the glass or plastic. If it is about to fall off, I leave it well alone. One possibility is to spray the markings with a clear lacquer to keep them in place but that will very much depend on the individual set. If there is dust on the dial scale, this may not work too well.

Both the 5Y3G and 6B8G valves had been replaced, as the originals tested faulty in my friend's valve tester. The other two valves tested OK and were cleaned with soapy water before being reinstalled in their sockets.

Be careful when cleaning valves though, as some type numbers will easily come off the valve envelope. I always tip the octal valves upside down and only rub soapy water on the glass envelopes, making sure that no water gets into the base as this may ruin the valve due to electrical leakage after it dries. I then leave the valve to dry before placing it back into the receiver.

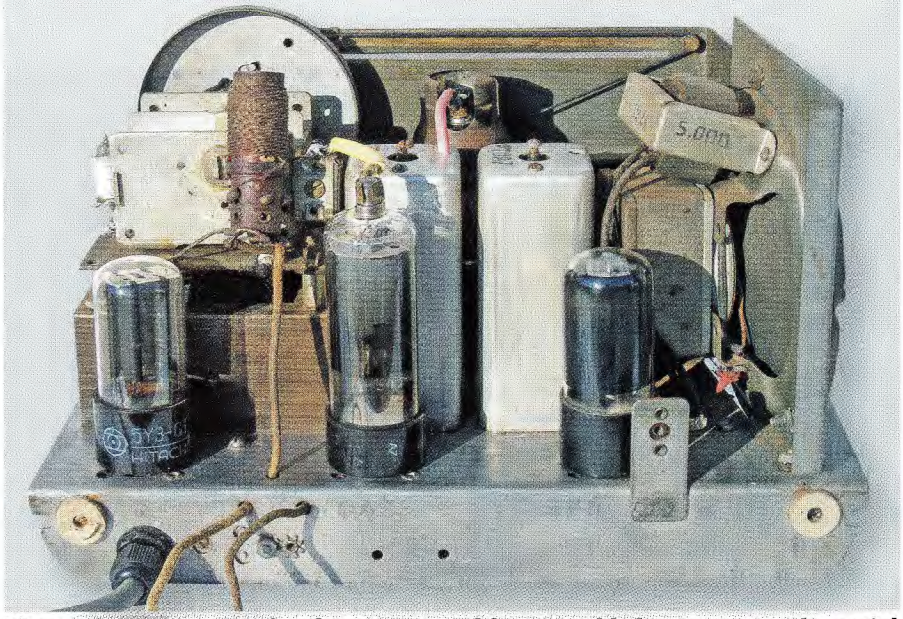

The parts on the top of the chassis are readily accessible but mounting the aerial coil so high up leaves it prone to damage during servicing.

The paper and electrolytic capacitors had all been replaced, while several out-of-tolerance resistors had also been changed. In addition, any leads with cracked insulation had been sleeved to prevent short circuits.

Once this work had been done, my friend checked for shorts between the HT line and chassis. Checks were also carried out on the power transformer to ensure it wasn't breaking down between the various windings and the frame. These transformer checks were carried out using a high-voltage insulation tester, as described some years ago in SILICON CHIP.

Finally, a new 3-core power lead was fitted to the set, along with an antenna and earth. It was time for the smoke test.

Well, it was all something of an anti-climax because no radio stations could be heard, even when the volume control was at maximum. What my friend did find though was that the set was very microphonic, particularly if any of the RF valves were flicked with a finger to give them a very mild physical shock.

Microphonics

For those who haven't experienced this effect, many valves in a receiver, if lightly tapped, will generate a "ringing" noise in the loudspeaker. This is often due to broken welds in the valve grid structures vibrating after being mechanically jolted. However, it can also occur in valves with no weld breaks if there is high enough gain in the amplifier train. That is why some valves in high-gain audio amplifier stages are mounted on resilient mounts.

Unfortunately, this ringing sound was all that my friend was getting out of the receiver, with no sign of any stations. As a result, he eventually

Securely Anchoring The Mains Cord

As shown in the photos, the mains cord has been secured to the Astor DL's chassis using a cable gland. However, we don't recommend this method as it's too easy to undo the nut securing the gland from outside the case.

Instead, we recommend that an approved cordgrip grommet be used to secure the mains cable to the chassis. This must be fitted to a correctly profiled hole to ensure it securely locks the mains cord into place.

We also note that the mains Earth lead has been soldered to the chassis and again we don't consider this as being safe and secure (the solder could easily separate from the chassis). Instead, we recommend that restorers purchase a mains lead with an eyelet lug pre-crimped to the Earth lead which can then be bolted to the chassis and secured using a star washer and two lock nuts.

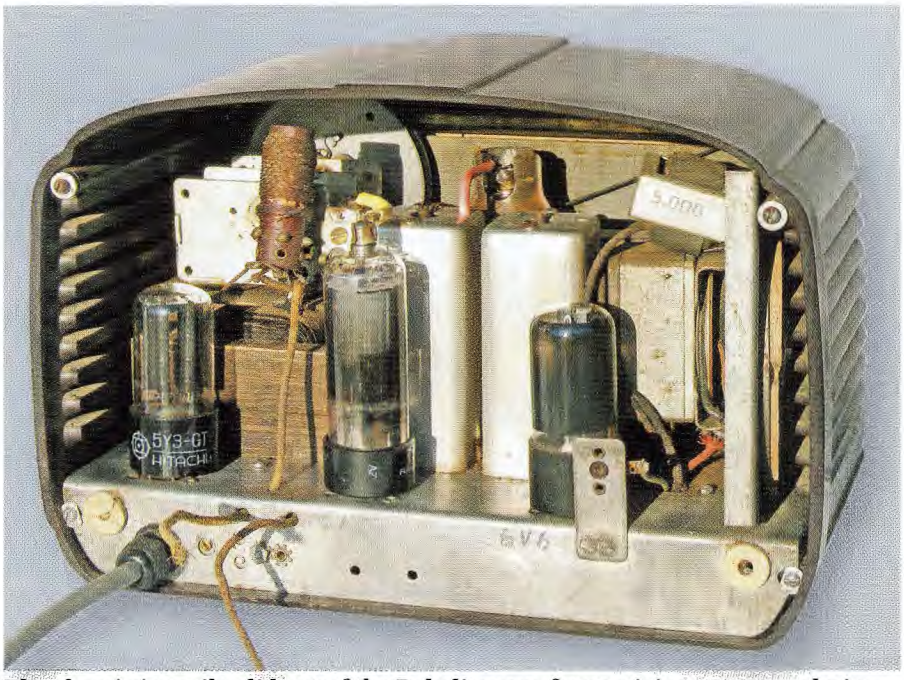

The chassis is easily slid out of the Bakelite case for servicing. Use a cordgrip grommet to secure the mains cord, not a cable gland as shown here (see panel).

brought the set over to see if I could find out what was wrong. Initially, it seemed as though it might be a faulty IF amplifier valve and so we tried another 6B8G with no success. We also tried another 6A8G but that didn't help either.

The audio amplifier stage was working well though and gave a healthy blurt whenever the grid of the 6V6G was touched. So the problem was somewhere in the RF or IF stages.

IF instability

A quick check showed that the voltages around these stage all seemed to be reasonably normal, so it was time to bring out the big guns. I have a tuned signal tracer and placing its RF probe close to the IF amplifier (6B8G) showed that it was oscillating vigorously. So what could be wrong around the IF amplifier?

The first item to be checked was the screen bypass on the 6B8G. It tested correctly and the only thing I did was to shorten its leads and reposition the chassis earth. This gave no improvement so we turned our attention to the valve shields. These had become corroded over the years, so the 6B8G was removed and the surfaces of the shield, the circlip and the earthing spigot on the valve were all cleaned using a kitchen scouring pad.

I expected that this would fix the problem but was quickly proved wrong – there was no improvement. My quick fix was quickly turning into a drawn-out fault-finding exercise.

By now, I was starting to run out of ideas, especially after all the work my friend had done to restore the set. However, after carefully checking his work, we eventually spotted a wiring mistake in the set although it's not certain when this occurred. The 0.05µF (50nF) capacitor between the cathode of the 6A8G went to pin 5 of the 6B8G instead of to pin 8. Since pin 5 is one of the detector diodes in the 6B8G, this wiring error very effectively stopped the stage from detecting signals.

My friend was sure that he hadn't touched this section and it certainly looked as though the soldered joints there hadn't been disturbed for many years. So just how the set got to be that way is something of a mystery.

We corrected the wiring error and this time when we applied power, the set was working. However, something was still not right. While it was pulling in stations OK, the IF stage was still oscillating wildly, with the result that tunable whistles were appearing across the band.

Well we'd cured one problem only to uncover another. So why was the IF stage still oscillating when everything looked OK? There just had to be another wiring error somewhere.

At this stage, I decided that the best approach was to carefully check all the wiring around the front-end and IF amplifier stages. This paid dividends as I eventually discovered that I couldn't find the cathode bypass capacitor on the frequency converter (6A8G). It wasn't hidden from view either – it just wasn't there.

In fact, going on the solder joints, it had never been in the circuit.

My initial reaction was that this would simply drop the gain of the converter but that it wasn't the cause of the instability problem. However, the converter would work better if the missing capacitor was in place and so this was duly fitted.

When the set was subsequently turned on, we were surprised to find that it was no longer oscillating and that its performance was actually quite good. So why had the IF stage oscillated when the bypass capacitor in another stage was missing?

Positive feedback

The answer is that the 0.05µF bypass capacitor wired between the cathodes of both RF valves forms a positive feedback path. This had the potential for the set to oscillate on 455kHz and oscillate it certainly did. By fitting the missing bypass from the 6A8G cathode to earth, this controlled the amount of feedback on 455kHz so that the IF stage was only slightly regenerative.

In fact, when I looked at all the general information on the receiver, I found that this technique was deliberate. Basically, the service bulletin states that the receiver has some positive feedback to give a small increase in performance. What really puzzles me is that the 6A8G cathode bypass had obviously never been fitted, so it must have been a dog of a set from new.

Alignment

Having solved the instability problem, it was now time to check the alignment. The IF stage alignment was pretty much spot on but the front-end did require some adjustment. The receiver would only tune to around 1500kHz at the top end of the dial and this needed to be extended to cover the entire broadcast band.

Unfortunately, the wire-type trimmer (20) in the oscillator section couldn't be adjusted, so I removed it. Without this trimmer, the set would tune up to 2000kHz. I then fitted an adjustable trimmer and was able to

continued on page 103

quite easily adjust the maximum tuned frequency to 1650kHz.

That done, I adjusted the antenna trimmer (19) at the high-frequency end of the dial for best performance. The performance at the low-frequency end now left a bit to be desired and this was fixed by tuning to that end of the dial and adjusting the padder capacitor (17). The adjustments at both ends were then repeated a few more times, by which time this little receiver was performing quite well.

With the alignment completed, the chassis was then slid back into its cabinet so that we could check the dial-scale calibration. The dial scale in this set is attached to the cabinet instead of to the chassis as in most sets. In practice, it's simply a matter of checking the calibration, then removing the chassis and sliding the pointer along the dial cord (about 20mm in this case) until the indicated station matches the tuned frequency.

The restoration was now completed by lightly oiling the slider (the rail that carries the pointer) and the tuning-gang bearings before finally securing the chassis inside the cabinet and attaching the back.

Summary

The Astor DL is an attractive, if rather heavy, austerity receiver which was manufactured just after World War II. It's quite a good performer – much better than you would expect of an austerity model – and is easy to work on. However, care is needed to ensure that you don't come into contact with the mains terminals under the chassis when servicing the set (it would be a good idea to insulate these).

This wasn't a particularly common model and as such, it is well worth having in a collection. **SC**