Vintage Radio

By Rodney Champness, VK3UG

The Philips twins: the Dutch BX462A & the Australian model 115

It's not common to see two sets that look almost identical on the outside but which are completely different on the inside. Such is the case with the Philips BX462A (Dutch) and 115 (Australian) receivers. In fact, the closer one looks at the chassis of these two sets, the more the differences become apparent.

BACK IN THE JUNE 2012 issue, Vintage Radio ran a story on John de Haas and his collection of Dutch and Australian vintage receivers. This month, we take a look at two receivers from his collection, the Dutch Philips BX462A from 1946 and the Australian Philips 115 from 1948.

These two sets are built into cabinets that are, to all intents and purposes, the same. Apparently, Philips Australia obtained the mould pattern for the cabinet of the slightly earlier European receiver and then designed and fitted a chassis to suit the Australian market.

From the outside, the most obvious differences between these two sets concern the dial-scale markings. For Australia, the dial scale is calibrated for the 530-1620kHz broadcast band only, whilst the Dutch version carries markings for a triple-band receiver. That's because in addition its broadcast band (536-1765kHz) facility, the BX462A is also capable of long-wave (150-424kHz) and shortwave (5.8-18.5MHz) reception.

Another external difference involves the number of controls. The Dutch version has two controls on the righthand side of the cabinet for tuning and band-switching, while the lefthand side carries an on-off/volume control and a tone control. By contrast, the Australian 115 carries just the tuning control on the righthand side, with the volume and on-off/tone controls on the left.

Their perforated cardboard rear panels are also different (although, unfortunately, the rear panel is now missing from the 115 set in John's collection). As shown in one of the photos, the Dutch BX462A also carries a number of diagrams which indicate the functions of the various chassis-mounted sockets, which are accessible through

matching cut-outs in the rear panel.

An interesting feature of the BX462A is that the power lead must be unplugged before the rear panel can be removed. This provides protection against electrocution – at least until the power lead is reconnected. In this set, there are a number of exposed connections on the power transformer along the back edge of the chassis, near the mains plug. By contrast, the AC power connections are better protected against accidental contact in the Australian 115.

In fact, Australian manufacturers generally provided better protection against accidental contact with high voltages compared to most European receivers.

Another interesting feature of the BX462A's rear panel is that a large section of the inside surface is lined with foil. This is connected to the receiver's antenna terminal when the rear panel is in place and can be used as the sole antenna in strong reception areas. The Australian 115 set has a similar foil antenna, although this is glued to the underside of the top of the cabinet (see photo).

Different valve counts

Once the rear panel is removed, it's immediately obvious that the BX462A is a 4-valve receiver only, although it has a 3-gang tuning capacitor which means that the circuitry must be something special (more on this later). By contrast, the 115 has five valves and a 2-gang tuning capacitor. It's a fairly standard mains-operated receiver as we shall see.

When restoring vintage radio receivers, it's common practice to remove the chassis from the cabinet. However, John de Haas strongly advises against doing this in the case of the BX462A unless it's absolutely imperative. That's because the dial tuning mechanism is complex, difficult to get at and has to be dismantled before the chassis can be removed, as it is attached to the rear of the front panel.

The 115 poses no such problems. Its dial-drive mechanism is attached to the chassis, so the latter can be removed quite easily. The speaker is attached to the front panel but it's simply a matter of unplugging its leads from the chassis as the latter is slid out of the cabinet.

The BX462A's speaker is also attached to the front panel. This arrangement gives better baffling than in many other receivers. The glass dial-scales sit proud of the cabinet in both sets and before doing any serious work on either receiver they should be removed so that they don't get broken. They are held in place with spring-loaded clamps just below the cabinet top and are straightforward to remove.

They may look the same on the outside but they use completely different chassis as these inside views of the Philips BX462A (top) and 115 receivers show. The Australian 115 covers the broadcast band only while the Dutch BX462A is a 3-band receiver and is much more complicated.

As stated above, removing the BX462A's chassis from its cabinet is something to be avoided whenever possible. That's usually not a problem though, because the underside of the chassis can still be accessed, simply by removing the bottom panel. In Philips sets, this bottom panel is usually a cardboard-type material and often has metal foil on its upper side. This acts as a shield for the under-chassis components and is connected to the chassis earth when the panel is in place.

Removing the bottom panels reveals that these two receivers are very different. As mentioned above, the BX462A is a 3-band receiver whereas the 115 is a broadcast-band receiver only. As a result, the BX462A is much more crowded under the chassis, especially around the band-switch. This makes

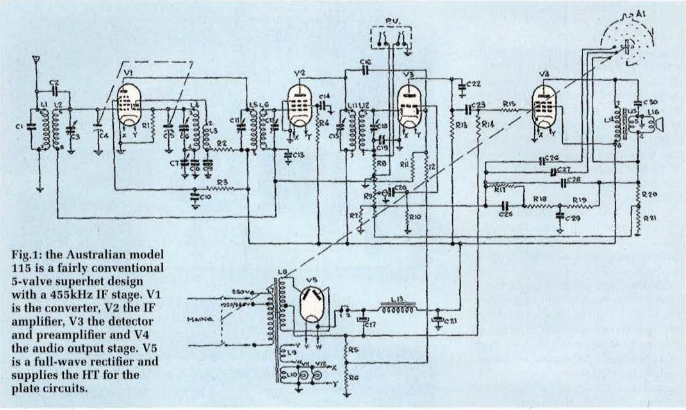

Fig.1: the Australian model 115 is a fairly conventional 5-valve superhet design with a 455kHz IF stage. V1 is the converter, V2 the IF amplifier, V3 the detector and preamplifier and V4 the audio output stage. V5 is a full-wave rectifier and supplies the HT for the plate circuits.

the 115 by far the easier receiver to service.

115 circuit details

Fig.1 shows the circuit of the 115. It's a fairly conventional superhet design apart from some interesting features in the tone control circuit.

The incoming RF signals are picked up by either an external antenna or the foil plate antenna inside the cabinet and fed to a tuned circuit consisting of L1 & C1. This tuned circuit is resonant just below the broadcast band when used with a short antenna. This boosts the performance of the input circuit, enhancing reception at the low-frequency end of the dial.

In addition, capacitor C2 provides a degree of top-coupling, so that the high-frequency stations also get a boost.

This view shows the Australian model 115. Note the unusual "pop-up" dial scale, a feature it shares with the Dutch BX462A receiver.

From there, the signal is fed via the antenna tuned circuit (L2, C3 & C4) to the grid of V1, an ECH35 converter valve. The oscillator tuned circuit consists of the components around inductors L3 and L4 and the resulting oscillator signal is injected via a grid into the converter section of the valve.

The IF (intermediate frequency) in this set is 455kHz and this component from the converter is fed from the ECH35's plate to the primary of the first IF transformer (L5 and C11). This is then coupled via the IF transformer's secondary (L6 and C12) to the signal grid of valve V2, a 6SK7GT IF amplifier. Its output is in turn fed via a second IF transformer to a detector diode in valve V3 (6SQ7GT), where it is demodulated.

In this set, a metal 6SQ7 has been used and its parameters are virtually identical to the GT version. Another thing to note is that wire-type trimmers are used to adjust the tuned frequency of the IF transformers rather than iron-dust cores. However, once set, they don't tend to drift in value and work just as well as iron-dust cores, although they are more fiddly to adjust.

After detection, the audio signal is applied via an RC network and volume control R9 to the grid of the 6SQ7 (V3). V3 amplifies this signal which is then

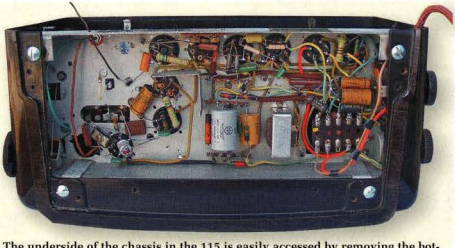

The underside of the chassis in the 115 is easily accessed by removing the bottom cover (no need to remove the chassis from the cabinet). This view shows the chassis with the old paper capacitors still in place.

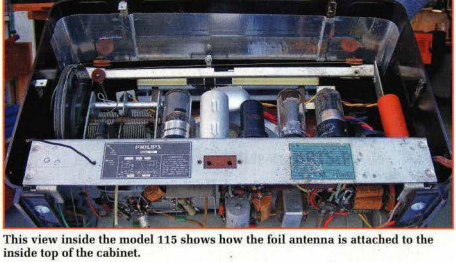

This view inside the model 115 shows how the foil antenna is attached to the inside top of the cabinet.

fed via another RC network to the grid of V4, a 6V6GT audio output stage. In fact, this particular set has a 6V6GTA, which has a slightly different envelope to the GT version.

The amplified signal from V4 drives the loudspeaker via an output transformer.

Note that provision is also made to connect a record player pick-up to the first audio amplifier (V3). When this is connected, the audio from the detector is shorted to earth and the pick-up signal line is isolated from the detector.

The tone control and negative feedback network is quite extensive. It consists of the switch at the top right of the circuit diagram and the following resistors: R7, R17, R18, R19, R20 & R21 and capacitors C25, C26, C27, C28 & C29. It's somewhat reminiscent of the comprehensive tone and negative feedback circuits that were used by Astor.

As well as feeding the second IF stage, V2's plate is connected to the AGC diode in V3 via a 33pF mica capacitor (C16). Normally, V3's AGC diode is biased off by -1.25V of backbias from the power supply (via R12). This voltage is also applied via R11 & C13 to provide the standing bias for both V1 and V2.

When a signal strong enough to generate more than -1.25V DC on the AGC diode is received, the standing bias is exceeded. After that, any further increase in signal level generates a voltage that's then fed to the AGC network. This voltage can increase to -10V or more, depending on the signal strength, and controls the gain of V1 and V2.

The power supply is quite standard and includes a mains transformer with three secondaries: 5V, 6.3V and a centre-tapped HT (high tension) winding. The latter drives a 5Y3GT full-wave rectifier (V5) which in turn supplies approximately 240V DC to the first filter capacitor (C17).

The filtering network consists of two electrolytic capacitors (C17 & C21) and filter choke L13. In addition, resistors R5 and R6 are wired between the centre tap of the HT winding and chassis. The voltage drop across these resistors provides a back bias of -12V for the 6V6GT and -1.25V (at their junction) for the two RF valves (V1 & V2).

Note that there is no decoupling between the plate circuits of any of the valves. Although this works well in most cases, instability can sometimes occur in sets that don't have decoupling between the plate circuit of the output valve and the rest of the circuit. However, this instability will usually only occur in sets with quite high gain.

BX462A circuit details

Fig.2 shows the circuit details of the Dutch BX462A. As can be seen, it's very different to the circuit used in the Australian 115 receiver.

As with the 115, the BX462A also includes a flat-foil antenna, in this case attached to the rear panel. Alternatively, an external antenna can be connected to the antenna terminal.

The antenna tuned circuits are much more complex in the BX462A than in the 115, to cater for the three switched bands: long-wave, medium-wave and shortwave. There is also an additional tuned circuit which operates at the signal frequency on both the long-wave and medium-wave bands, hence the use of a 3-gang tuning capacitor. On shortwave, however, only one antenna tuned circuit is used.

The way Philips has drawn the switches initially makes the switching arrangement hard to follow, although it's quite simple once you've figured out what's going on. After studying the circuit and the Dutch service manual, I've concluded that the extra tuned-frequency selectivity stage is needed on the long-wave and medium-wave bands for two simple reasons.

First, the high-frequency end of the long-wave band is 424kHz, just 28kHz away from the centre of the IF amplifier passband (452kHz in the BX462A). Second, the 530kHz low-frequency end of the broadcast band is only 78kHz away from the IF passband, although this is not as critical.

The signal from the antenna tuned

The rear panel of the Philips BX462A carries diagrams to identify the various sockets, ie, antenna and earth, external loudspeaker and turntable.

circuit is applied to the signal grid of valve B1, an ECH21 triode-heptode converter. The local oscillator is based on the triode section of this valve and its signal output is mixed in the converter section. This is an unusual valve in that the oscillator injection grid in the heptode comes out to a separate pin. This allows the triode and heptode sections to be used for quite different purposes, as in the next couple of stages.

The converter output at the plate of the heptode has several frequencies present but the only one of interest is the IF at 452kHz. This is fed through a double-tuned IF transformer to the signal grid of B2, another ECH21. In this instance, the heptode section acts as a straight pentode and the amplified signal at its plate is fed via another double-tuned IF transformer to the detector diode in B3, an EBL21.

The resulting demodulated audio signal from the detector is amplified in the triode section of B2. The amplified signal (on the plate) is then applied to the grid of valve B3 which now functions a high-gain output pentode. This then drives the loudspeaker via an output transformer.

Negative feedback is applied from the voice coil winding of the output transformer to the input of B3. This feedback circuit is unusual in that it has two inductors in the feedback path. Unfortunately, the values of these inductors are not shown on the circuit or in the parts list.

As with the model 115, the audio amplifier stage in the BX462A includes an input for a record player pick-up. This is connected by inserting a double plug into the socket shown at the top right of the circuit. When this is done, the audio from the detector is shorted out and the pick-up signal is fed to the top of the volume control (R15).

AGC in this receiver is achieved by feeding a high-level IF signal from the plate of the heptode in B2 to the AGC diode in B3 (via C34). The AGC diode is back-biased via R3 and the bias is also applied to the triode audio amplifier grid and the IF amplifier and converter stage grids.

Because the diode is reverse biased, it doesn't conduct until the receiver is tuned to a relatively strong station. Once the back-bias level is exceeded, the diode conducts and the resulting voltage is applied to the AGC line via R22. This bias voltage is filtered by C36.

The power supply transformer has a number of primary winding taps so that the set can work on a variety of mains voltages, ranging from 110V AC to 245V AC. There are three secondary windings: a 4V winding for the rectifier filament, a 6.3V winding for the heaters of the amplifying valves and a centre-tapped HT winding that's fed to rectifier B4, an AZ1.

This arrangement provides about 240V DC at the first filter capacitor (C1). The HT is then applied to a tapping on the audio output transformer which acts in part as a filter choke and provided it's correctly phased, will tend to buck any hum in the grid circuit of the audio output valve.

The other end of this choke is connected to a 1.2kΩ resistor (R1) and is then further filtered using C2 to provide the HT rail for the receiver.

Compared to the 115, this receiver has many more decoupled power supply lines which is good design practice. Back bias is provided for all amplifying stages of the receiver by the voltages developed across resistor R2 (68Ω) and resistor R3 (33Ω). B3 receives about three times as much back-bias voltage as the other two stages.

The underside of the chassis in the BX462A is also accessed by removing the bottom cover. The layout is more crowded than in the model 115 and access to some parts around the band-switch (at left) is not all that easy.

Restoration

To restore these two sets, John replaced all critical and/or leaky paper capacitors, a few out-of-tolerance resistors and any electrolytic capacitors that had gone low in value or had excessive leakage current. Any weak valves were also replaced.

In addition, both cabinets were carefully cleaned and polished and they now look quite attractive. All the wiring in the BX462A appears to have plastic insulation whereas the 115

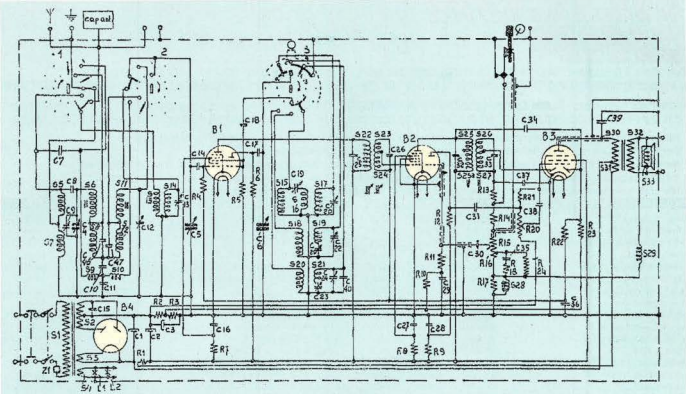

Fig.2: the BX462A is a 4-valve superhet with band-switching to cover the long-wave, medium wave (broadcast) & short-wave bands. A 3-gang tuning capacitor is used to provide for an additional tuned circuit when operating on the long-wave & medium-wave bands, to improve selectivity.

has a number of rubber-covered leads which have perished. These leads haven't been replaced but will need to be if the wiring is later disturbed.

Comparing the two sets

From the outset, it's obvious that the BX462A is a very well-designed set, with no skimping on the parts needed to do a good job. Its part count includes 47 capacitors and 24 resistors, whereas the 115 has 29 capacitors and 21 resistors. In addition, the BX462A has three tuned bands whilst the 115 covers the broadcast band only.

Both sets offer good performance but the BX462A is just that little bit better as more care has been taken in matching the tuned circuits to the valves to achieve the best outcome. The BX462A also has more decoupling between stages which ensures good stability in this high-performance receiver.

That said, both have good negative feedback and tone control networks and both provide good-quality audio when tuned to local stations.

One problem with the BX462A is the poorly thought-out dial scale arrangement, as mentioned earlier. Working on the antenna and oscillator coils in the BX462A wouldn't be easy either. However, Philips coils and IF transformers are generally very reliable, so this usually isn't a problem as the seldom require replacement.

Conclusion

There's no doubt that the BX462A is the superior set, both in terms of its circuit design and performance. It also features long-wave and shortwave bands, which the 115 lacks.

However, the 115 still offers good performance and it is a simpler set which makes it easier to service.

So which of the two would I prefer if I had to choose between them? Definitely the BX462A but I'd also take the 115 home any day if it was offered to me. **SC**