Vintage Radio

By Rodney Champness, VK3UG

The Philips Twins – the Australian Model 138 & the Dutch BX221-U

Not quite Philips twins: the Australian model 138 (left) and the Dutch BX221-U (right) look almost the same from the outside (apart from their dial scales) but are very different on the inside.

Back in October, we took a look at the Dutch BX462A and the Australian model 115 receivers, two sets that look the same on the outside but are very different on the inside. This month, we look at another pair of Philips "twins", the Dutch BX221-U and the Australian model 138.

AS BEFORE, THESE new Philips twins are very different on the inside, despite being housed in identical Bakeliute cabinets. And once again, the Dutch set is a triple-band receiver, whereas the Australian 138 is a broadcast-band only set.

The Dutch set also has five valves versus four for the Australian set, and it can cater for mains voltages from 110-220V whereas the model 138 is limited to 200-260V. But perhaps the most important difference is that, unlike the Australian set, the BX221-U doesn't use a mains transformer. In fact, one side of the mains is directly connected to chassis, so this "hot-chassis" set can be dangerous to work on if you don't know what you are doing.

The Dutch BX221-U and the Australian 138 models are smaller than the sets described in October. However, the reason for their identical appearance is the same. The parent company in Holland developed moulds for Bakelite cabinets for various receivers after World War II and several of these cabinets were also used for sets built by Philips in Australia.

Usually, the Australian lookalike didn't appear until 1-2 years after the European set. However, the BX221-U and 138 models featured here both appeared around the same time, in 1953.

The 138 circuit

Take a look now at Fig.1 for the circuit details of the Australian model 138. It's a typical 4-valve superhet mantel receiver intended for suburban use. The valve line-up is 6AN7 (converter), 6N8 (IF amplifier/detector/AGC), 6M5 (audio output) and an EZ82 rectifier, the latter similar to a 6V4.

As shown on Fig.1, an external antenna is connected to the junction of L1 and C1, an input tuned circuit that's resonant just below the broadcast

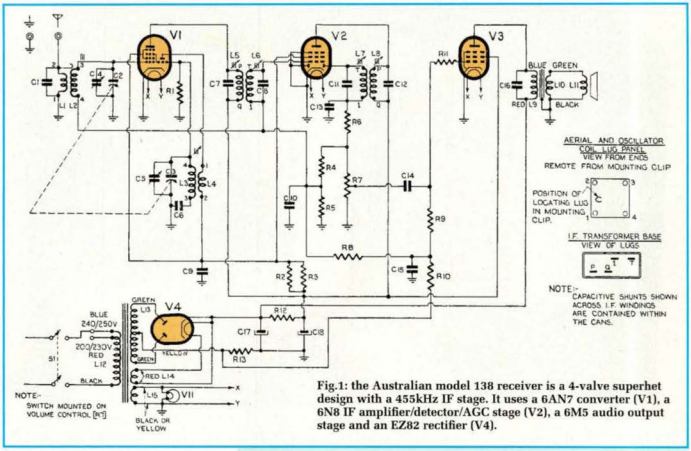

Fig.1: the Australian model 138 receiver is a 4-valve superhet design with a 455kHz IF stage. It uses a 6AN7 converter (V1), a 6N8 IF amplifier/detector/AGC stage (V2), a 6M5 audio output stage and an EZ82 rectifier (V4).

band. As with many receivers of this vintage, the antennas used were usually quite short (typically 6-7 metres) and were either run around a picture rail or along the floor beside the skirting board. As a result, the signal pick-up was nowhere near as good as from an external antenna around 30 metres long and 10 metres above ground.

Being resonant just below the broadcast band, the input tuned circuit boosted the pick-up of signals at the low-frequency end of the tuning range. By contrast, a small capacitor is used to boost the performance at the high-frequency end. It's shown on Fig.1 as a small hook that's adjacent to terminal 3 on the antenna coil.

In practice, this capacitor is just a short length of wire that runs from terminal 2 and finishes near the top of tuned winding L2. In addition, the antenna input signal is inductively coupled between L1 (the primary of the antenna coil) and the L2 secondary.

From there, the signal is tuned using variable capacitor C2 (and trimmer C4) and fed to the grid of V1, the 6AN7 converter valve. The local oscillator consists of V1 itself plus inductors L3 & L4 (the oscillator coil), capacitors C3, C5 & C6 and resistor R1. The tuning range of the receiver is 530-1620kHz.

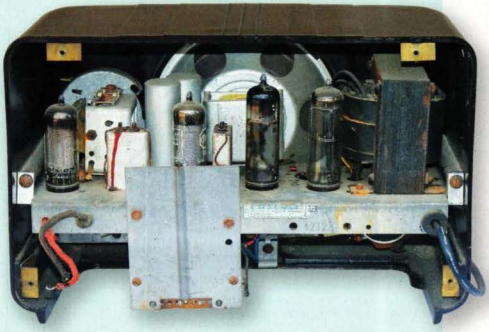

This is the view inside the model 138 receiver. Unlike the BX221-U, it uses a power transformer which makes it a lot safer to work on.

Among other things, this circuit produces a 455kHz IF (intermediate frequency) at V1's plate, due to mixing the tuned input signal with the local oscillator signal (ie, the difference frequency). This is then fed to the first IF transformer which consists of two tuned windings, ie, L5 & C7 and L6 &

The BX221-U chassis is more complicated than the model 138's and includes an extra valve plus a ferrite rod antenna for the long-wave & broadcast bands. There's no power transformer, so caution is required when working on this set.

The underside of the BX221-U's chassis is quite crowded although access to individual parts is generally quite good.

C8. The filtered 455kHz IF signal is then fed to the signal grid of V2, a 6N8 duo-diode-pentode valve.

V2 amplifies the IF signal and its plate circuit drives the primary (L8) of the second 455kHz IF transformer. The tuned secondary (L7) then feeds the detector/AGC diode in V2.

The detected audio signal appears across resistor R6 and volume control R7. It's then taken from R7's wiper and fed to the grid of audio amplifier V3 (6M5) via C14 and R11. R11 is typically included in the grid circuit of audio output valves, particularly those with high gain. It has two purposes: (1) to minimise any parasitic oscillation in high-gain valves and (2) to attenuate any IF signal that may be present in the audio signal.

From my experience, attenuation of the IF signal is dramatically improved by connecting a 47pF capacitor between the grid of the audio output valve and earth. This also improves the stability of the IF amplifier stage in many receivers, as it prevents (or greatly reduces) radiated IF signals from the audio output stage from getting into the input of the IF amplifier.

The audio signal from R7 is amplified in V3 and then fed to the loudspeaker via an output transformer (L9). There is no negative feedback in this receiver since it doesn't have a lot of audio gain (there's only one audio amplifying stage).

Power supply

The power supply is quite conventional and is based on a power transformer and a full-wave rectifier (V4). The power transformer has a tapped primary winding that allows connection to voltages between 200V and 250V AC with mains frequencies

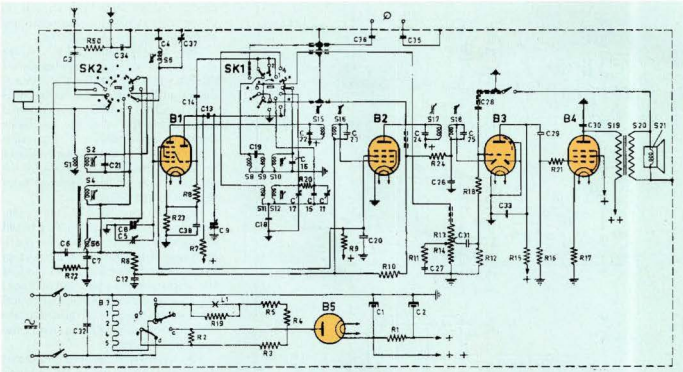

Fig.2: the Dutch BX221-U 3-band receiver is also a superhet design but has five valves, giving it better performance than the model 138. Note that this is a "hot-chassis" set, with one side of the mains connecting directly to the circuit earth (ie, there's no mains transformer).

between 40Hz and 60Hz. In addition, there are three secondary windings: two 6.3V heater windings and a centre-tapped high-tension (HT) winding.

The HT secondary voltage is rectified by V4 (EZ82). The resulting HT rail is filtered by C17 for the plate circuit of V3, while R12 and C18 provide extra filtering and decoupling for the plate circuits of V1 and V2. The screen circuits of V1 and V2 also get additional filtering using R2, R3 and C9. As a result, this set has good decoupling between the various stages.

A back bias voltage of -6.5V for the 6M5 is developed across resistor R13, while extra resistors provide a bias of -1V to V1 & V2 and around -0.2V to the detector/AGC diode in V2.

This means that under very weak or no-signal conditions, the receiver will be quiet as the detector/AGC diode will be back biased (ie, -0.2V). However, good radio signals (and noise) will quickly cause this cut-off bias to be exceeded and the AGC voltage to rise. Only around one fifth of the possible AGC voltage developed is used, so the converter and IF valves do not have their gain cut back as much as in a typical 5-valve receiver.

In suburban locations, this results in a higher output from the detector than is typical for 5-valve sets, which largely compensates for the lower gain of a single-stage audio amplifier.

The BX221-U circuit

Now let's take a look at the circuit for the Dutch BX221-U – see Fig.2. It's a very different receiver to the 138, although externally it looks almost identical. However, unlike the 138, the BX221-U has little lever arms behind each of its front-panel controls.

The lefthand end of the cabinet carries the on-off-volume control and this has a 2-position tone switch behind it. Similarly, the righthand end of the cabinet carries the tuning control and an associated wave-change switch lever.

As stated, the BX221-U is a 3-band design and tunes 150-261kHz (longwave), 517-1622kHz (broadcast band) and 5.94-18.2MHz (shortwave). Unfortunately, it's not easy to work out

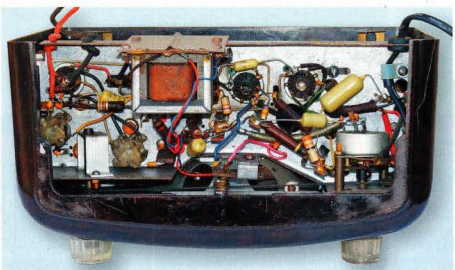

The model 138's chassis layout is much simpler than the BX221-U's layout, with no complicated band switching.

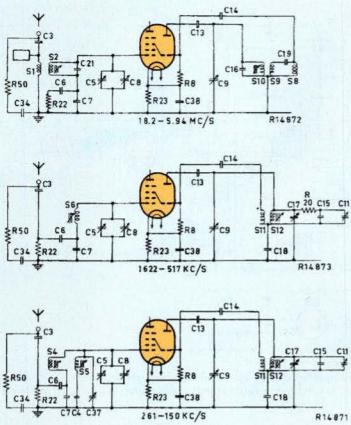

Fig.3: these diagrams show how the converter stage (V1) is wired for each of the three bands on the BX221-U. On shortwave (top), an internal foil-plate antenna is switched in but this is switched out for the broadcast (centre) and long-wave (bottom) bands and a ferrite-rod antenna used instead.

the switching arrangement for these three bands from the circuit diagram and this must have proved a problem for many servicemen without access to comprehensive service data.

Fortunately, the detailed service manual shows the way each front-end section is wired when each band is selected – see Fig.3. This makes it much easier to understand the set's operation on each band and makes servicing much easier.

On the shortwave band, an internal foil-plate antenna glued to the inside of the cabinet is used and an external antenna can also be attached. By contrast, on the other two bands, the foil-plate antenna is switched out and a ferrite-rod antenna rod is selected instead. This ferrite-rod antenna (see photo) is 250mm in length and is the longest I have seen. As before, an external wire antenna can also be used with the long-wave and broadcast bands.

Oscillator arrangements

Separate antenna coils are used for each band, with the long-wave and medium wave coils both wound on the ferrite rod antenna. The oscillator arrangements are also different.

Only one oscillator coil is used for the broadcast and long-wave bands and the circuit is typical for a broadcast-band oscillator. However, on the long-wave band, C11 and C15 are switched into circuit to lower the oscillator frequency and restrict its tuning range. For long-wave reception, the oscillator only tunes from 602-713kHz, whereas on the broadcast band it tunes from 969kHz to 2074kHz.

Converter stage B1, a UCH42 triode-hexode, amplifies the incoming tuned RF signal and mixes it with the oscillator signal to produce a number of frequencies. These are fed to the first IF transformer (S15 and S16 on Fig.2) which is tuned to the 452kHz IF (intermediate frequency) – ie, the difference between the tuned RF signal and the oscillator frequency.

The signal from this doubled-tuned IF transformer is fed to B2, a UF41 remote cut-off RF pentode, where it is amplified and then fed to the second IF transformer. From there, the signal is fed to a detector diode in valve B3, a UBC41 duo-diode-triode. The audio output from the detector then goes via the wave-change switch to B3's grid which provides the first stage of audio amplification.

As well as selecting bands, the wave-change switch also includes provision to select an external record player. However, because this is an AC/DC set (ie, hot chassis), both sides of the record player input are isolated by capacitors (C35 & C36) to prevent electric shock (ie, these capacitors are in series with both the active signal input and the earth side of the signal input).

Note that the external antenna and earth inputs are similarly isolated using capacitors.

Following amplification in B3, the signal is fed to B4, a UL41 high-gain power output pentode. This then drives an audio output transformer and a 5Ω loudspeaker. A simple switched negative feedback/tone control circuit is wired between the speaker's voice coil and B3's grid. There is also some negative feedback due to the cathode resistor not having a filter capacitor wired across it.

Power supply

As stated above, this is a hot-chassis set, with one side of the mains directly connected to the circuit earth. There is no mains transformer, so you've got to really know what you are doing when servicing such sets. Electrocution can be fatal so the best advice is, "if in doubt, don't touch them".

The power supply is typical for an AC/DC set, with the heaters of the valves all wired in series and drawing around 0.1A. The voltages across the heaters are as follows: B1 = 14V, B2 = 12.6V, B3 = 14V, B4 = 45V and B5 = 31V, giving a total of 116.6V.

When powered from 110V AC (or thereabouts), the heater circuit is wired directly across the mains. However, for 220V AC, resistors are connected in series with the heater string.

B5, a UY41, is a half-wave rectifier. It produces a HT voltage of about 185V on its cathode when the set is connected to 220V AC mains. For 110V AC mains, the HT voltage could be as high as 154V but is more likely to be around 130V DC. And if the set is connected to 110V DC mains, the HT voltage is likely to be just 90V volts, so its performance will be limited.

In short, while the BX221-U can work on DC mains, it will perform much better on AC mains.

No back-bias network

The HT filter consists of the usual two electrolytic capacitors and a decoupling resistor. There is no back-bias network. Instead, B3 relies on contact potential bias at its grid, while B4 has cathode bias due to R17, a 150Ω resistor. Similarly, valve B1 is biased via its cathode resistor but B2 has no standing bias.

Instead, bias for B2 is obtained only when there is sufficient signal at the detector/AGC diode to cause it to conduct. The AGC system is a quite simple whereas other Philips sets usually have some form of delayed AGC and even quiet AGC (QAGC). Because the set will usually be tuned to a station, an AGC voltage (and hence bias) will normally be applied to B2. This may be satisfactory for domestic radio receivers but it would not be used with communications receivers.

Comparing the two receivers

As already pointed out, the Australian model 138 is a 4-valve receiver whereas the Dutch BX221-U is a 5-valve set. As a result, the BX221-U provides better performance in outlying areas away from radio stations.

Because it's a 3-band set, the dial-scale of the Dutch set is more complex than the 138. The service manual for the BX221-U runs to 12 pages, which is just as well because as with other European Philips sets, it's quite complex both electronically and physically.

By contrast, the service data for the model 138 runs to just three pages.

Restoration

The owner of these sets, John de Haas, has done some work on these receivers but there is still more to do. While the cabinets are generally in good condition, the bottoms have been scratched, although some of these scratches can be removed by polishing.

The wiring in both sets has been run using plastic-coated wire, so the insulation is still in good condition. However, any components that have deteriorated and/or are critical to safe and proper operation of the sets have been replaced.

Despite the age of these sets, alignment of the tuned circuits was not found to be necessary except for a few minor tweaks. And while the model 138 would be relatively easy to align, aligning the front end of the BX221-U is not a job to be taken lightly.

Summary

It's interesting to observe the different approaches taken by the European and Australian manufacturers of these two Philips sets. The Australian set is simpler, less costly to build and easier to service, while the Dutch set is more complex but is ultimately a better performer.

In addition, the BX221-U has three bands which makes it more versatile. So which one would I like in my collection? The answer is "both", because they are twins and we shouldn't separate twins! **SC**