Vintage Radio

By Malcolm Fowler

The Mullard 5-10 Ten Watt Valve Amplifier

One of the finest amplifiers available for hobbyists to build in the early 1960s was the Mullard 5-10 ultralinear valve unit. This had state-of-the-art performance and a working example would give a very good account of itself in comparison to the best valve amplifiers now available.

IN THE EARLY 1960s, I was fortunate enough to attend a school in the UK where the physics master was not only a great teacher but a hifi buff, electronics whizz and semi-professional sound recordist. These extra-curricular interests were put to good use in the running of a radio club and the production and recording of school plays and concerts. Students involved in the radio club, of which I was a member, were recruited to build and operate an array of audio equipment.

We had at our disposal several Ferrograph tape recorders, a record-cutting lathe and a multitude of Mullard-designed mixers, preamps and power amplifiers. The majority of the Mullard-designed equipment, based on "Mullard Circuits for Audio Amplifiers" published in 1959, was built by the students and this was my introduction to a lifelong interest in audio and electronics.

Fifty years later and a wave of nostalgia had me thinking of revisiting these valve amplifiers, not because I prefer valve sound but just for the delight of it and particularly the glow of the valves. Solid-state may give great sound but it lacks a certain charisma!

I initially looked into building a pair of 10-watt Mullard 5-10s from scratch but the availability and cost of components, particularly transformers, seemed to rule this option out. Consequently, I started looking at vintage amplifiers suitable for restoration such as the Leak Stereo 20 but again cost was an issue. Leak Stereo 20s typically sell for well in excess of $1000 and then need to be refurbished.

Aegis 5-10 amplifiers

After some research, I eventually came across two dissimilar Aegis 5-10 amplifiers being offered for sale on the internet. On the spur of the moment, I bought them, sight unseen, for far less than the cost of a new mains transformer. I knew relatively little about these amplifiers other than that they were built by the Aegis Manufacturing Company in Melbourne in the late 1950s and early 1960s and that they adopted the Mullard 5-10 amplifier designs in their various formats.

These amplifiers could be purchased new as individual units for £40/5/- (forty pounds five shillings) in 1959. They were also incorporated by other manufacturers into high-end console units.

My secondhand amplifiers, complete with all their valves, survived the journey from Queensland to Melbourne via Australia Post. As mentioned, the two units were dissimilar, both physically and electronically. The first (Serial No: 378), which I shall refer to as 'Amp1', was built on a single-level steel chassis and was fitted with A&R mains and output transformers. The circuit was exactly to the Mullard 5-10 design for "Distributed Loading" (also called ultralinear), where the screen grids of the output valves are fed from tappings on the output transformer.

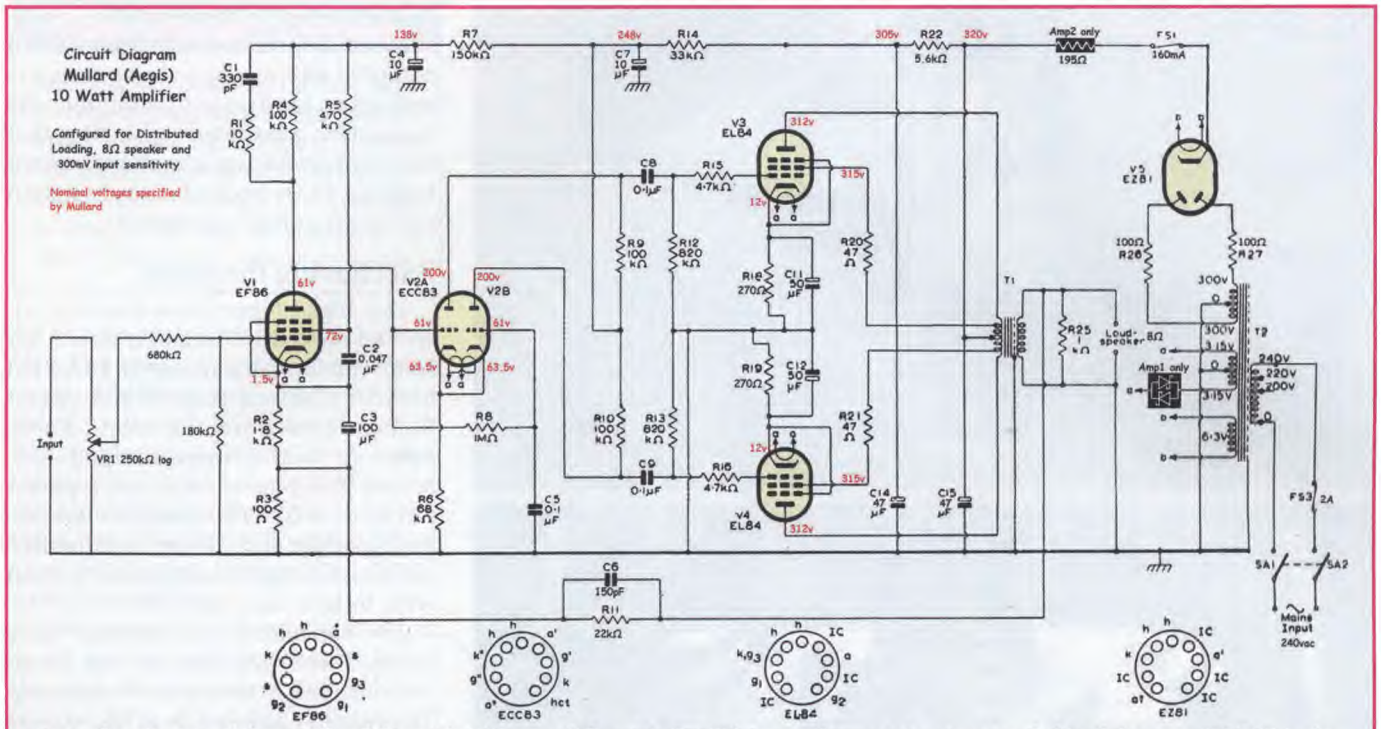

Fig.1: the circuit of the Mullard (Aegis) 10W amplifier. V1 (EF86) is a voltage gain stage and this drives an ECC83 twin triode (V2) operating as a phase splitter. V2 in turn drives two EL84 pentodes (V3 & V4) operating in ultralinear push-pull mode. Feedback is applied from the output of the speaker transformer back to the cathode of the EF86 pentode.

This configuration is used to achieve a compromise between the performance of the two EL84s when connected as triodes and pentodes. Sufficient power reserve is maintained yet distortion is much lower than with a normal pentode connection.

The second unit (Serial No: A272), which I shall refer to as 'Amp2', was built on a stepped aluminium chassis and was fitted with a National mains transformer and a Barco output transformer. The circuit was exactly to the Mullard 5-10 design for "Low Loading" where increasing the cathode resistance and lowering the anode-to-anode load to 6kΩ results in a reduction in quiescent current from 36mA to 24mA.

This configuration is recommended for use with speech and music as it has low distortion and lower power consumption. However, it cannot cope with continuous sinewave inputs.

Both units came with passive tone control modules built to the Mullard specification. I had no interest in using these as from my experience they only detract from the performance of the main amplifier due to reduced sensitivity and hum and noise pick up.

Checking the components revealed that the main filter capacitors were beyond redemption and most of the resistors were reading at least 20% high.

This view shows the two Aegis valve audio amplifiers and their associated tone control units as purchased by the author. Both amplifiers required complete rebuilds before they could be used (the tone control units were not restored).

The valves were tested by a friend and were found to be serviceable but of varying quality. The two power transformers tested as good, passing both voltage and insulation tests with flying colours. The one disappointment was that the A&R output transformer on Amp1 had an open-circuit primary somewhere deep within the winding!

Due to the state of the filter capacitors and the open-circuit output transformer on Amp1, no attempt was made to power up either of these amplifiers in their original state.

Decision time

The difference in output formats, the failed output transformer and the state of the components, wiring and connectors made it clear that complete rebuilds would be necessary to create two functional matched amplifiers for stereo use. I wanted to rebuild the amplifiers in the 'Distributed Load'

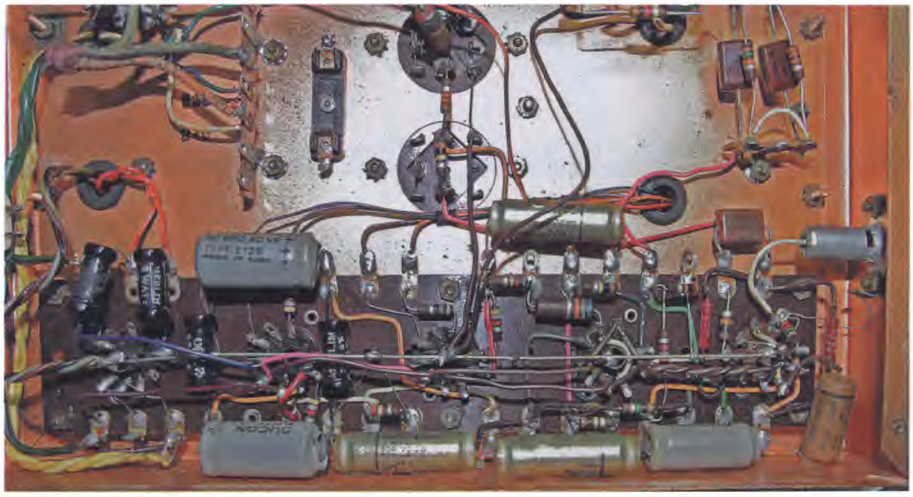

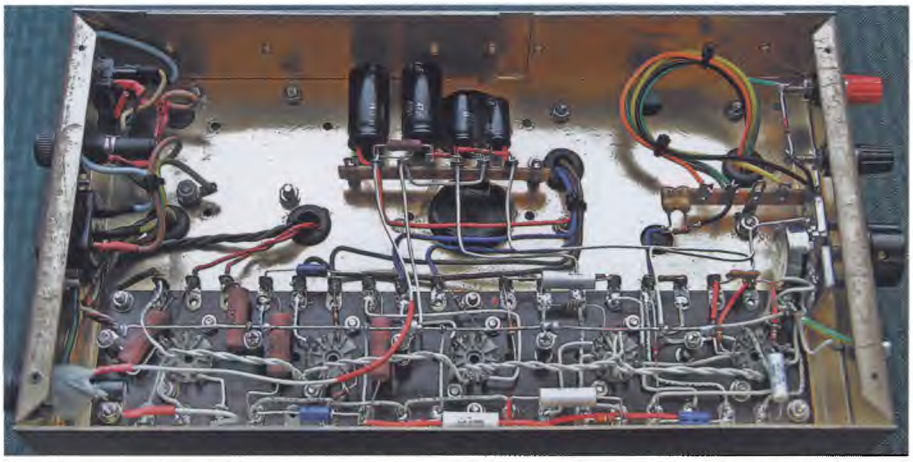

These two under-chassis views show one of the Aegis amplifiers (Amp1) before restoration (top) and after restoration (above). Note the turret board with the valve sockets and other parts at the bottom.

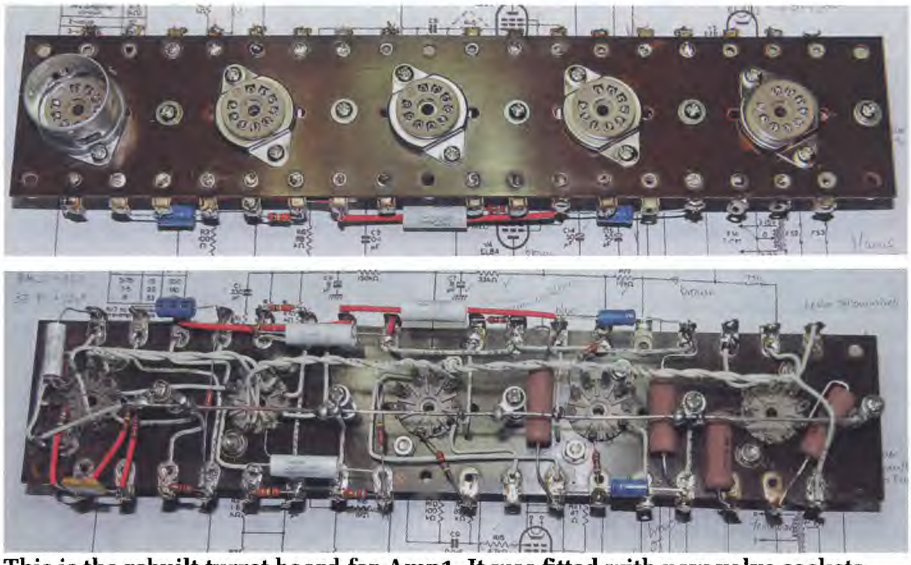

This is the rebuilt turret board for Amp1. It was fitted with new valve sockets and new capacitors, resistors and wiring. Note the spacers between the sockets and the associated earth bus bar.

output format as this, in my opinion, is the best of the Mullard alternatives. To do this, I would need a new matched pair of output transformers which wasn't going to be cheap. However, I already had a purchaser in the wings for the Barco 'Low Loading' output transformer in Amp2 so this would offset the cost to some extent.

I would also need to purchase a full complement of capacitors, resistors and other hardware to complete the renovation. I assumed at this stage that the valves would be acceptable, at least initially. I was hooked – it was certain that I was going to proceed!

Purchasing the parts

The biggest purchase decision involved the output transformers. After some considerable research, I decided to order a pair of Transcendar output transformers from the USA. These have an 8kΩ primary impedance, screen grid taps at 40% and a power rating of 30W. The transformers are built to order and are very competitive with locally equivalent products, even with freight costs included.

The capacitors and resistors were ordered from Digi-Key in one lot so as to minimise the impact of shipping. The reason I ordered from Digi-Key is that I had a wide choice of well-known brands, full specifications and in most cases the prices were very competitive. Add to that a shipping time of around six days and it stacked up well.

I selected Panasonic EE series electrolytics for the filter capacitors, Vishay BC for the low-voltage electrolytics, Cornell Dubilier for polyester film and mica capacitors, Vishay Dale for the wirewound resistors and Vishay BC for all other resistors which were 1W 5% metal film types. The required axial format and working voltages limited the choice of capacitors in certain instances.

New Belton Micalex valve sockets (fitted with skirts for the EF86) were also ordered, while the wiring ordered was stranded 22AWG hookup wire from Alpha Wire. This wire, trademarked as 'EcoWire', is insulated with a wall thickness of only 0.23mm PPE (polyphenylene ether) and has a 600V DC rating. It's not cheap but it is great to work with as the insulation, similar to PTFE, is not affected by the heat of soldering and the overall diameter makes it easy to fit into relatively tight spots.

Other hardware such as potentiometers, fuseholders, speaker terminals, RCA sockets, switches and mains IEC connectors came from my existing stocks on hand.

Dismantling & preparation

Both amplifiers were completely dismantled back to bare chassis and

Use Safety Fuses

Note that the fuseholders shown fitted to these units are not recommended for mains or other high-voltage (HT) work. These days, mains safety fuses (eg, Jaycar SZ-2025 or Altronics S5977) should be used to eliminate the possibility of electric shock when removing the fuse.

all unnecessary connectors removed. New holes were then cut as necessary to provide for the speaker terminals, volume control, RCA input socket, IEC mains input, mains switch and two fuseholders (mains and HT). The remaining holes from previous fittings were blanked off with steel or aluminium plate, depending on the particular chassis.

The aluminium chassis was much easier to work with but the rigidity of the steel chassis made it the preferred option. After a thorough degrease, all metalwork was spray-painted, first with primer and then "Old Gold" hammertone finish enamel. The two chassis were then put aside to allow the paint to thoroughly harden.

The turret boards with valve sockets incorporated were stripped down, desoldered and all terminals cleaned with a Dremel wire brush. The original valve sockets were removed by drilling out the mounting rivets and the boards given a final clean with isopropyl alcohol.

It was my original intention to 're-stuff' the old filter capacitors with new, physically much smaller, 450V DC capacitors. However, the cases disintegrated during the removal of the bases so that idea was shelved in favour of new sub-chassis tag boards.

These photographs show the two fully-restored amplifiers with their transformer covers removed. Note that the fuseholders shown here are not the recommended types for mains and high-voltage work (see panel).

Rebuild

Once the components arrived, I reassembled the turret boards. The new valve sockets were secured using M3 machine screws and nuts. The new valve sockets didn't have central spigots on which to mount a ground bus bar, so I fitted spacers to the tagstrip between each valve socket. A solder tag was then fitted to the top of each spacer to create a mounting point for the bus bar. All ground connections were made to this bus bar which itself was earthed only at the input socket.

All the links were then installed followed by the components, care being taken to insulate long leads where relevant. Once the turret board was fully assembled, it was checked, checked again and then checked again – first against diagrams I had made of the original installation, then against the Mullard schematic and finally against photographs I had taken of the original board.

The new connectors, volume control, power socket and fuses were then fitted to the chassis. The transformers were then re-attached, albeit in a different orientation. It was necessary to change the orientation so that the coils of the mains transformers and the new output transformers would be at 90° to each other to minimise hum pick up.

I checked these locations by first powering up each main transformer and then connecting my oscilloscope to an output transformer secondary. The scope was then monitored while I changed the orientation of the output transformer. My conclusion was that

The chassis of both units were completely re-sprayed, first with primer and then with "Old Gold" hammer-finish enamel. The transformer covers were also re-sprayed to make them look like new.

orientating the output transformer at 90° relative to the mains transformer made a big difference! On Amp2, it was necessary to modify the transformer cover slightly to accommodate the output transformer, as it was not possible to re-orientate the mains transformer.

The turret boards were then reinstalled and the necessary connections to the transformers, sockets and fuses etc completed. The filter capacitors and their associated dropper resistors were assembled on a tagstrip close to the original location for these parts. Although a fiddly process, it was very satisfying to see the end approaching.

The moment of truth

Once everything was complete, I repeated the checking procedure – I didn't want expensive smoke coming out of those new output transformers!

It was then time to fire up the first amplifier. I set Amp1 up with a full complement of valves and connected an 8Ω dummy load to its output. I then connected my multimeter to the HT line and slowly ramped up the voltage from the Variac.

First, the neon indicator in the mains switch came on, then the valves started to glow and the HT voltage began to increase. I increased the Variac voltage to 180VAC and let it stay at that for some time. It all seemed good; there was no smoke and the voltages looked about right. I then increased the voltage to 240VAC and it all still seemed to be OK.

The next step was to connect a speaker and a signal source and much to my satisfaction, undistorted sound was the result. In short, it all seemed to be performing correctly although there was a little more background noise than I would have liked – not hum, just "white" noise. I then put Amp2 through the same process with the same result.

Once this initial trial was over, I decided to check all voltages against the Mullard specifications and run a frequency response curve using TrueRTA software. It's worth noting that at this stage, both units still had their original valves.

The voltages were largely in line with Mullard's figures. However, the heater voltage in Amp1 and the HT in Amp2 were a little too high for my peace of mind. Another issue of note was that the anode voltage on the EF86 and the corresponding grid voltage on the ECC83 were about 20% low, although the sound was fine and I was assured that this was acceptable by those 'that know'. It was also thought that this may be due to "tired" EF86 valves.

The frequency response at 1W using TrueRTA was within -2dB from 20Hz to 20kHz. The noise floor was

The completed valve amplifiers (one for each channel) are used in a stereo set-up with a pair of Celestion Ditton 15 loudspeakers. A CD player (not shown) is used as the signal source.

obviously higher than specification at somewhere around the -54dB mark (the specification is at least -75dB at 10W).

Tweaking & listening

The HT voltage in Amp2 was reduced to below 320V DC by installing a 195Ω resistor prior to the first filter capacitor. A pair of back-to-back Schottky diodes were also installed in the heater supply of Amp1, thereby reducing the heater voltage by 0.4VAC to just below 6.3VAC overall.

It was always my intention to use these two amplifiers in a stereo configuration, initially using a CD player as a signal source and Celestion Ditton 15 loudspeakers which I had purchased new in 1970. The input sensitivity of each amplifier is 40mV for full output and this needed to be attenuated to suit the CD player's output and to allow an 'upstream' remote motorised stereo volume control to be included.

The suggested Mullard attenuation for use with their 2-valve and 3-valve preamplifiers proved to be just right. This modification was made 'downstream' of the inbuilt volume control which is really there for the purpose of setting the balance between the two amplifiers.

Subsequent listening tests proved to be very satisfactory. The increased background noise was annoying but easily forgotten; I particularly liked the sound of classical piano, violin and solo vocals.

New valves

As the weeks went by, I really felt that I had to install a new set of valves of known quality to see what improvement could be achieved. I disappeared into the world of 'New Old Stock' (NOS) valves, new manufacturers, Mullard valves that aren't Mullard at all, JJs versus EH etc. It's a whole new world out there and most of the emphasis is aimed at guitar amplifiers where they want controlled breakdown and distortion and 'musicality'!

Fortunately, there is another sector that is more focused on audio and this tends to be where NOS is hallowed and overpriced. A genuine 1956 Amperex Bugleboy ECC83 from the Mullard Blackburn factory could compete with Penfolds Grange in price and desirability!

To cut a long story short, I managed to obtain pair of NOS Tesla EZ81s from Bulgaria, a pair of Siemens EF86 pentodes from Serbia, and a pair of matched Raytheon ECC83 triodes and matched pairs of Raytheon EL84 pentodes from the USA. These valves were all produced in the 1960s, had never been used and tested as new.

Interestingly, the Raytheon valves were all originally produced in Japan by Hitachi and branded as 'Baldwin', for use in organs. I was told that only the best valves were reserved for the audio amplifiers in organs!

The new valves were installed and the lack of background noise was immediately apparent; both amplifiers now measured at better than -78dB. I listened for many hours to run the valves in and it was (and still is) a very pleasant experience.

After about 40 hours, I rechecked all the voltages. They were very close to specification and identical between Amp1 and Amp2. It still seemed to me that the anode voltage of the EF86 was too low so I decided to reduce the anode load resistor from 120kΩ to 100kΩ. That increased the voltage and slightly reduced the voltage gain. I can't say that I've noticed any difference in the sound but it makes me feel better to be within the middle of the specification rather than at one end!

I am satisfied that the amplifiers are now complete. The covers have been put in place and custom labels affixed. A remote stereo volume control is operational and I enjoy the listening experience and the glow from the valves. I make no claim that they sound better than my Luxman L410 which I love but they do make a very satisfying and alternative sound! **SC**

Acknowledgement: I would like to acknowledge my physics teacher Dr K. G. (Doc) Britton, Rydal School, UK 1941-1976.