Vintage Radio

By Ian Batty

The General Electric P-807 5-Transistor Set

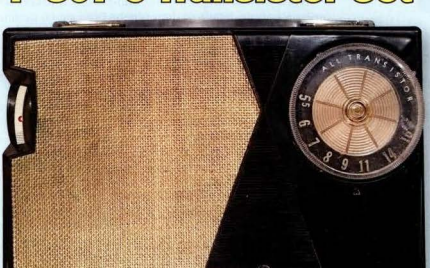

The P-807, General Electric's second transistor radio, still had only five transistors just like the earlier model 675. However, unlike the model 675, it used a fixed bias Class-A output stage and other aspects of the circuit were also quite different.

AS DETAILED in the September 2015 issue, Thomas Edison's many technology companies had consolidated into the Edison Electric Light Company by 1889. And this in turn eventually amalgamated with the Thomson-Houston Electric Light Company to form General Electric in 1892.

In common with several other electronics manufacturers during World War II, GE worked on microwave diodes for use in radar receiver mixers. Following the war, the company eventually decided to get into transistor manufacturing and June 1st, 1951 saw GE list their point-contact SX-4A and Z2 types. In today's dollars, these transistors cost around $480 each.

Intensive development by Hall at the Schenectady centre and Saby at Syracuse eventually produced (respectively) the grown-junction type (as also produced by Texas Instruments for the Regency TR-1) and the alloyed-junction type. The latter was released as the 2N43/44/45 in 1953 and this type dominated the industry until the arrival of advanced diffusion techniques.

Their Philips/Mullard cousins, the lower-powered OC70/71, are the types we are more familiar with in Australia. For a complete history, see the article by Mark P. D. Burgess as listed in the references in the September issue.

All germanium devices are vulnerable to surface contamination. Native germanium will naturally oxidise to form a surface layer but germanium dioxide is not impervious to attack. Silicon dioxide, though, is basically glass. This meant that manufacturers could "top off" silicon devices with an oxide layer and be sure of reliability.

2N170: normal & "top hat"

Many of GE's early transistors used a "top hat" outline, as shown in an accompanying photograph. Much of GE's early output was for the military and so reliability was critical. As a result, early GE transistors featured a top "exhaust port" and this allowed the metal-cased transistors to be completely evacuated during manufacture to ensure the best possible reliability.

Comparison/highlights/design

As with the GE 675 radio described in the September 2015 issue, the P-807 featured here is a 5-transistor design. However, there are important differences between the two.

First, as noted, the GE-675 uses an ingenious "sliding bias" volume control/bias circuit for the output stage. By contrast, the P-807 uses a conventional diode demodulator and fixed bias on the Class-A output stage. In addition, unlike the GE 675, the P-807's first IF amplifier stage is wired in a grounded base configuration, while the loudspeaker uses a moving-armature/reed motor to drive the speaker cone.

This type of speaker is known as a moving-iron loudspeaker. Basically, it consists of a solenoid and a thin ferrous-metal diaphragm which is attached to the cone. When an audio signal is applied to the solenoid, the solenoid's magnetic field varies and the diaphragm (or reed) moves in response to this varying magnetic field.

As noted previously, a 5-transistor design may seem like a recipe for poor performance. However, it's worth re-

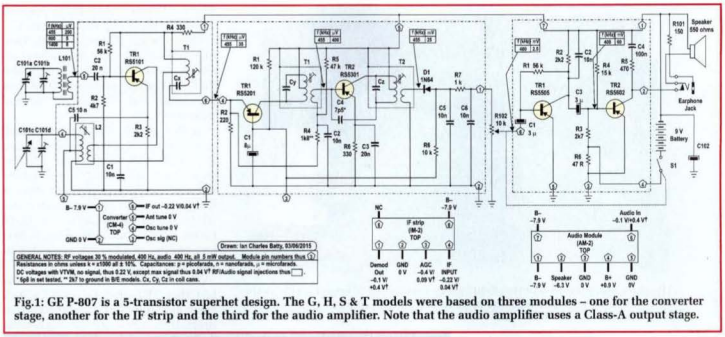

Fig.1: GE P-807 is a 5-transistor superhet design. The G, H, S & T models were based on three modules – one for the converter stage, another for the IF strip and the third for the audio amplifier. Note that the audio amplifier uses a Class-A output stage.

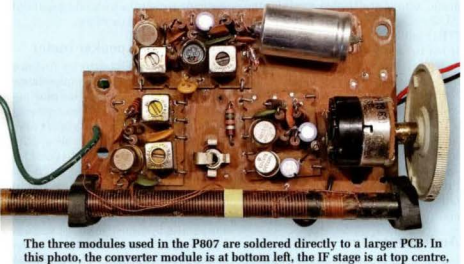

The three modules used in the P807 are soldered directly to a larger PCB. In this photo, the converter module is at bottom left, the IF stage is at top centre, and the audio amplifier module is at bottom right, immediately to the left of the volume control pot.

membering that a conventional 6-transistor set has only five amplifying stages, since two of its six transistors are used in a push-pull output amplifier stage. By contrast, both the GE-675 and P-805 sets use a Class-A output stage when uses just a single transistor.

P807: first look

When I first opened the P-807's back and checked the circuit board, there didn't appear to be enough tracks for a 5-transistor superhet design. Removing the board and flipping it over solved the riddle. Versions P-807G, H, S & T use three soldered-in modules: one for the converter stage, another for the IF strip and a third for the audio stage.

Basically, the set described here is an upgrade of the original P-807B/E models which used a conventional PCB, with all components mounted directly on it.

At first glance, modular design sounds attractive. Instead of an exhaustive component-level troubleshooting procedure, one simply identifies and swaps out the faulty module.

However, this approach does rely on the availability of replacement modules. In practice, specialised spare parts such as these become harder to obtain as the years go by and in this case, a quick online search turned up nothing. This means that any repairs (other than to the antenna rod, tuning gang or speaker) generally require careful removal of the offending module so that component-level repairs can be carried out.

Circuit description

The GE-675 was the most unusual transistor radio design I'd previously encountered, so what surprises did the P807 have in store? Before we delve into the circuit, note that the following description is for the modular version, so each module has its own part numbering. The previous "all on one board" circuit uses a common numbering scheme.

In particular, note that the transistor, capacitor and resistor numbers start over again on each module (eg, there's a TR1 on the converter module, a TR1 on the IF module and a TR1 on the audio amplifier module).

Fig.1 shows the circuit details of the P807. The converter stage is quite conventional with collector-base feedback for TR1 via oscillator coil L1. It's similar to that used in the GE-675 but has slightly different biasing values due to a lower 9V supply. In addition, TR1's collector load is a single, tapped tuned winding in the 1st IF transformer (T1). By contrast, the GE-675 uses a conventional double-coil IF transformer here.

IF module

The first IF amplifier is based on TR1 (in the IF module) and, as mentioned above, this is connected as a common base circuit. This circuit is sometimes preferred for its ability to work well at both VHF and UHF frequencies. Its

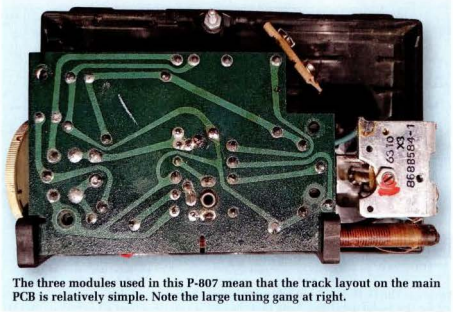

The three modules used in this P-807 mean that the track layout on the main PCB is relatively simple. Note the large tuning gang at right.

main advantage is the virtual elimination of feedback capacitance, an advantage that also applies to grounded-grid valve circuits.

Its main disadvantage is lower power gain than from a well-neutralised common-emitter stage. Although a grounded-base configuration can give substantial voltage gain, its current gain is less than unity. By contrast, a common-emitter stage can provide current gain as well as voltage gain and that means that its power gain is higher.

Note that although signal injection voltages and antenna field strengths are quoted in microvolts per metre, the critical issue in transistor amplifier stages is power gain. As a result, there is a near-universal preference for the common-emitter configuration in all but VHF/UHF applications.

Unlike the 675, AGC is applied to the 1st IF amplifier stage (TR2) via its base bias circuit. In this case. AGC is derived from the output of detector diode D1 and fed back to TR1's base via resistor R6.

The output from the 1st IF amplifier feeds the tapped, tuned primary of the 2nd IF transformer (T1). Its untapped, untuned secondary then feeds the second IF amplifier stage based on PNP transistor TR2.

As shown in Fig.1, TR2 is connected as a conventional common-emitter stage and is neutralised via capacitor C4. This IF amplifier stage in turn feeds the untapped tuned primary of the 3rd IF transformer T2. Its untuned, untapped secondary then feeds diode demodulator D1 which then feeds the audio amplifier. D1 also provides the AGC voltage for the 1st IF amplifier (TR1) and, as mentioned above, this is fed back via resistor R6.

There's just one final detail: TR2 is also gain-controlled, as its base bias is affected by TR1's emitter voltage. Think of TR1 as an emitter-follower – it feeds the varying AGC voltage at its base out via its emitter to the bottom end of TR2's bias divider which uses resistors R4 and R5. Note that this happens in the modular versions only; the B & E models lack this gain-control connection.

Audio amplifier

The first audio stage is based on TR1 and uses simple collector bias (R1 & R2). As shown on Fig.1, the detected audio from D1 is fed to TR1's base via volume control R102 (a 10kΩ pot) and capacitor C1. The resulting signal on TR1's collector is then fed to the base of output stage TR2 via capacitor C3.

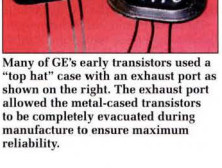

Many of GE's early transistors used a "top hat" case with an exhaust port as shown on the right. The exhaust port allowed the metal-cased transistors to be completely evacuated during manufacture to ensure maximum reliability.

Output stage TR2 works with fixed bias, possibly because the sliding bias circuit used in GE's 675 model (see SILICON CHIP, September 2015) was unreliable and didn't offer thermal protection.

At first glance, TR2 appears to lack an emitter resistor which would make it prone to thermal runaway. However, closer examination shows that the main 9V supply's dropping resistor (R6) is also TR2's emitter resistor, and it's bypassed using C102. And that's clever – we get a combination of bias and emitter and supply bypassing in one circuit.

The stability is also aided by the fact that TR2 operates as a Class-A stage and thus has constant current drain. By contrast, the varying current drain of a Class-B output stage can be a recipe for audio instability without the necessary precautions.

Moving-iron speaker motor

Output stage TR2 directly drives a magnetic speaker with an impedance of 550Ω. The speaker used is a moving-iron type, a design that was common and popular in the early days of radio. This type of speaker is capable of driving a large cone to moderate volumes and replaced the earlier horn types.

While a moving-iron speaker can give adequate living-room volume levels, its restricted frequency response and limited power-handling capabilities eventually saw it overtaken by the moving-coil speaker. These can be made with a wide frequency response and power handling capabilities up to hundreds of watts and remain the dominant type today.

The author's GE P-807

I recently purchased a GE P-807 and when I applied power, I was rewarded with a perfectly-operating set. A quick spin of the dial brought in plenty of stations, so a quick clean and polish was all I needed to do to restore the set.

So how good is it? The answer is pretty good. Although it lacks the sliding-bias "battery miser" output stage design of the 675 model, it's a better radio all round. What's more, it runs from a single 9V battery and this makes it a more attractive vintage set than some other early transistor radios.

Its audio response from volume

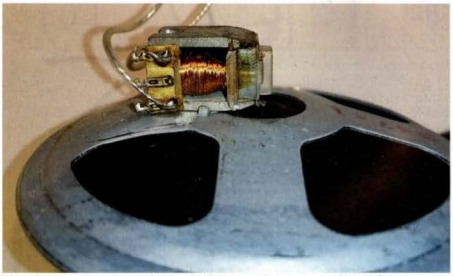

This close-up view shows the moving-iron speaker motor, a design that was common in the early days of radio. This one has an impedance of 550Ω.

control to loudspeaker is 40Hz – 3kHz at the -3dB points and out to around 10kHz at -10dB. The response from antenna to speaker is around 45Hz – 1.5kHz, while the IF selectivity is ±2.5kHz at -3dB and ±30kHz at -60dB.

In practice, its audio performance is better than the 675's, with a maximum output of 60mW at clipping. At 5mW output, the distortion is 3.2% (6% at 50mW).

The set's RF sensitivity is 50μV/m at 600kHz and 90μV/m at 1400kHz but with a S/N ratio of only 10dB. In order to achieve a 20dB S/N ratio, it requires around 70μV/m at 600kHz and 130μV/m at 1400kHz.

The 2-stage AGC is outstanding, there being only a 6dB increase in the output in response to a 40dB signal increase. I also monitored TR2's base voltage in the IF module during testing and found that it dropped from about 0.5V to 0.3V in the presence of strong signals, thus confirming the operation of the 2-stage AGC circuitry. During these tests, I also discovered that I had to apply some 200mV/m of signal before the IF channel began to distort the signal due to overload.

Loudspeaker performance

Compared to similar sets with moving-coil speakers, the P807 performs pretty well with its moving iron speaker. Applying a pink noise signal to the audio section resulted in an acoustic response from 200Hz to 3.5kHz at -10dB, with a pronounced peak around 3kHz.

This confirms the moving-magnet mechanism's problem with mechanical resonance. For such a small set though, it's a minor quibble.

How it compares

This is a well-designed little set. Compared to the outstanding Philips 198, with its 6-transistor design and Class-B audio output stage, the GE P-807's lower audio output (about -5dB down) suffers only in very noisy environments. In the workshop, there really isn't much difference between them.

As stated, a 5-transistor set with a Class-A output stage has the same number of amplifying stages as a 6-transistor set with a Class-B output stage. As a result, it follows that their sensitivity and audio quality at moderate volume levels are pretty similar.

The P-807 does, however, have higher current consumption than similar sets, at around 20-25mA for all volume settings. By contrast, the GE-675 varies its current consumption with volume due to its sliding-bias Class-A output stage, while Class-B sets also vary their current with volume.

So would I buy another one? The answer is maybe. Until I came across this set, I had been unaware of the two different methods used to build the various models; ie, the P-807B/E models used all discrete components, while the P-807G/H/S/T series used the 3-module approach. Apart from servicing issues, it would be nice to know whether the modular construction technique offered any advantages.

Finally, as with the GE-675, P-807s are often available on eBay, usually from the United States.

Further reading

(1) For information on the P-807B/E non-modular sets, see: **http://www.antiqueradios.com/forums/viewtopic.php?f=4&t=224244** where you'll find links to the Sams P-807 Photofact under a post by PBPP.

(2) For information on the G/H/S/T modularised versions, see: **http://www.radiomuseum.org/r/general_el_p807sp_807.html**

(3) For information on the moving-iron speaker, see: **https://en.wikipedia.org/wiki/Moving_iron_speaker** SC