Vintage Radio

By Terry Gray

The AWA 461 MA clock radio & the Heathkit RF signal generator

Restoring a vintage radio can be time-consuming, particularly if you also have to fix the gear that's meant to help fix the radio. In this case, I started out restoring an AWA 461 MA clock radio and ended up also repairing a Heathkit RF signal generator and a Racal frequency counter.

IT STARTED out innocently enough when my thoughtful, ever-loving eldest son presented me with an old radio "to repair". "Happy Birthday Dad".

I had a small radio and TV repair business when I was a lad so it was not unreasonable for him to imagine that I would be interested in spending some of my retirement bringing an old radio back from the dead. After all, I still played around with electronics and had a scope, a soldering iron and other parts on hand.

I had even designed a few bits of test gear for our local BMW dealer over the last few years, so how hard could it be?

My son bought the radio from a second-hand shop in Sydney. It was an AWA 461 MA superheterodyne clock radio in a burgundy plastic case that really looked the worse for wear. It was missing several knobs and the scratched tuning dial featured all the popular NSW stations, so it wasn't much use here in Victoria.

Nevertheless, a smile and a hug sealed the deal. "You'll have fun with that" were my son's parting words.

If I had known then what I know now, I would have fed the thing into the nearest compactor but that's not the way families operate is it? No; I now had an obligation, an absolute duty, to make my son proud of his gift – and of his Dad who will surely make this thing look and work like new. Gulp!

It was some months later when I finally got around to looking at it. Unfortunately, if the outside looked bad, then the inside looked even worse. Someone had obviously been playing with the clock mechanism, as it was missing many pieces and may even have overheated at one stage. All four valves were present at least but to this crotchety old gift recipient, this radio was an absolute waste of time. In short, it was a veritable write-off.

A few days later, I found myself complaining along those lines to my neighbour and friend John who lives across the road. John is a vintage radio enthusiast who has years of experience in these matters, hundreds of radios and no sympathy for whingers like me. "Just fix the !@#$% thing", he said, "here, use this for parts".

He then presented me with a cream version of the exact same model radio from his vast collection. Wow! Such generosity. I instantly had a few more knobs, another clock mechanism, and a "Radiola" label for the front of my burgundy cabinet. This was progress, especially as the gifts kept coming. John then handed me a kit of replacement capacitors. "Change the capacitors first" he said. "It's always the capacitors". Thanks John.

Returning home suitably chastised but with renewed enthusiasm, I found a service manual for the AWA 461 MA radio at the impressive www.kevinchant.com website. Here was a complete schematic diagram (with voltages), a parts list and alignment information. Great!

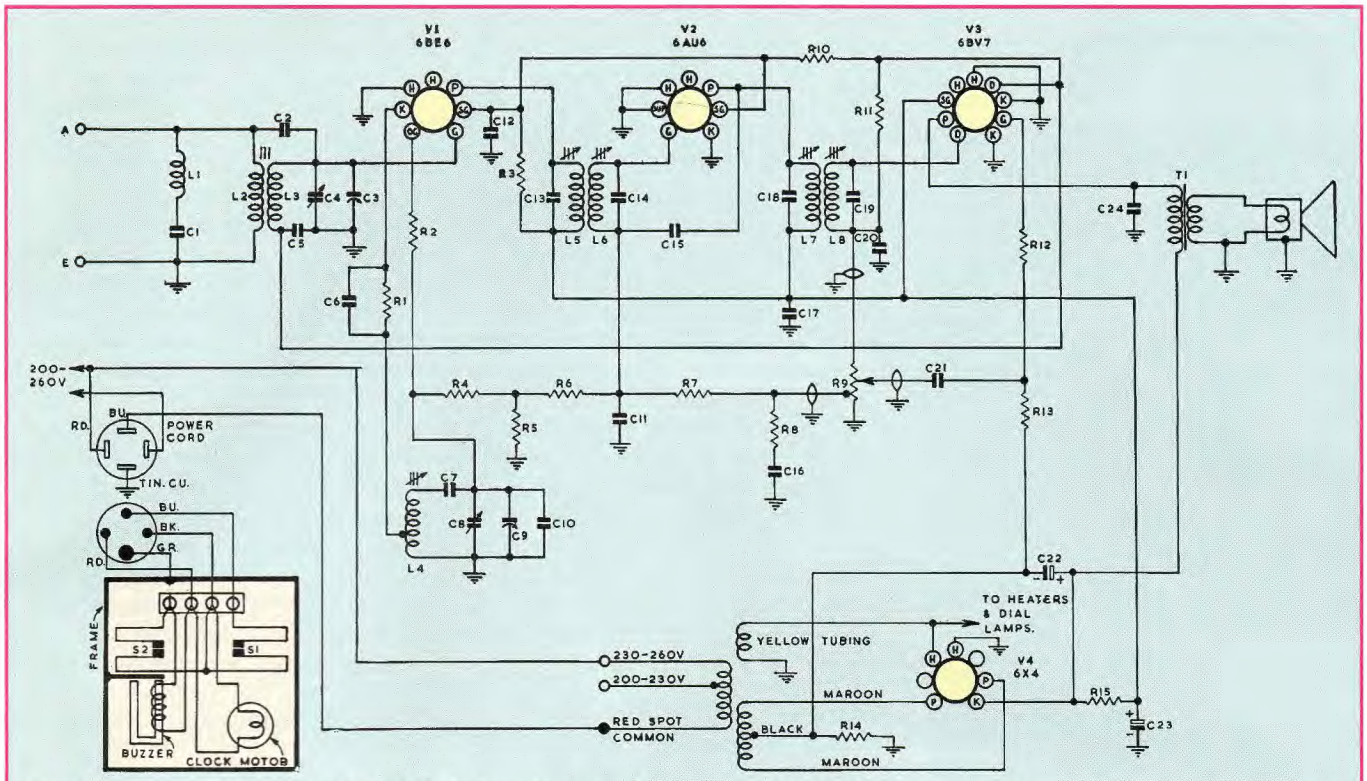

Fig.1: the circuit of the AWA 461 MA clock radio. It's a fairly conventional 4-valve superhet set with a 6BE6 converter, a 6AU6 IF amplifier, a 6BV7 detector/AGC/audio output stage and a 6X4 rectifier. It also incorporates an electric clock with an alarm to switch on the radio at the set time. (Circuit courtesy www.kevinchant.com).

I swapped out the electrolytic capacitors in both radios, as well as some of the black non-polarised capacitors that had visibly cracked open. Some of the remaining capacitors looked OK to me and seemed to react appropriately when connected to my multimeter. However, I couldn't be sure if their values had drifted, so I logged on to eBay and purchased a capacitor tester. It wasn't very expensive but I was confident that it would prove useful. The buying spree had begun.

With both radios now displaying some sort of life, I checked that the voltages at various points on the circuits were reasonable. Some valves were faulty but I had enough in my spare parts drawers to swap them around so that I ended up with reliable sets.

The next obvious problem was reception. A few faint and garbled stations appeared in the background when I powered the radios on but as I live in the Dandenong ranges opposite some powerful phone towers and in a house full of switchmode LED lighting, what chance did I have? Even stringing an antenna wire outside and ensuring I had a good ground wasn't enough to ensure good reception.

Both radios performed similarly so it appeared that lack of signal was the only problem. Indeed, even my car radio struggles at home until I drive some distance away. Perhaps if I used an RF generator, I could simulate some stations and tweak the alignment to improve performance.

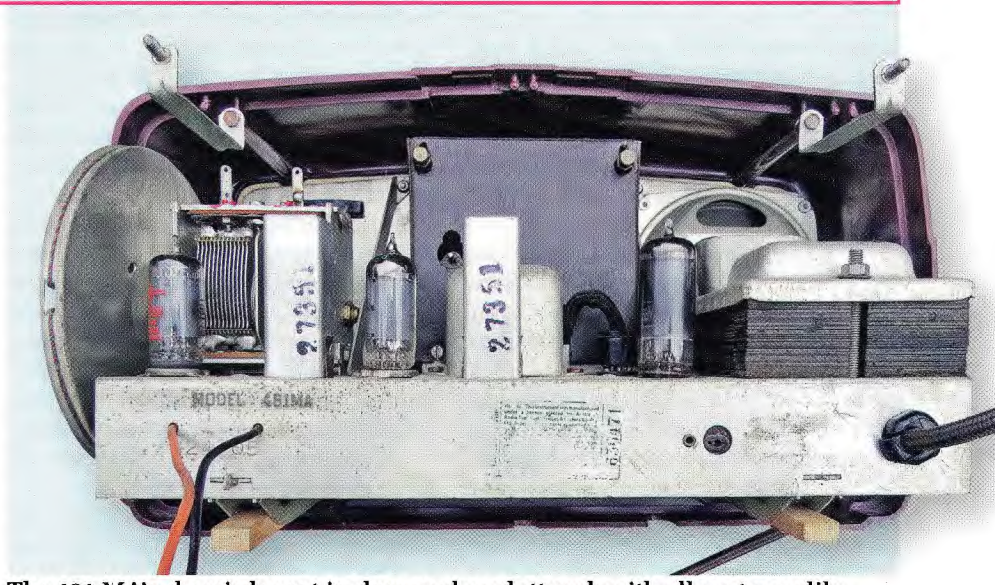

The 461 MA's chassis layout is clean and uncluttered, with all parts readily accessible. The clock mechanism is in the centre, next to the loudspeaker, and is fitted with a dust cover.

The Heathkit generator

It turned out that another friend (Ron) had an old Heathkit RF signal generator with a handy modulation option. You probably recognise the Heathkit name. From 1955 to about 1990, they manufactured a big range of electronic kits, including radios and test equipment. It was possible to buy them fully assembled for a few dollars extra but the vast majority were sold in kit form to be assembled by cus-

This Heathkit IG-102S RF signal generator was lent to me but it soon failed when I attempted to use it.

tomers whose skill level could best be described as "varied". While some obviously didn't know which end to hold the soldering iron, others did a very professional job indeed and I was really hoping that Ron's unit came from the latter group.

This Heathkit RF signal generator was sold from 1963 to 1977 and the IG-102S "S" model would have been developed towards the end of that period. What I didn't know then (but do now) is that the "S" indicates that it is a Berkley Physics Lab version of the instrument. It came with extra RF output connectors which provided a high-level direct output RF option and, according to a YouTube video, is not suitable for radio alignment due to the high RF levels radiated from the extra connectors.

That seemed to be a big call to me. It would surely be a simple matter to disconnect the high-output connectors inside the unit if stray radiation proved to be a problem.

While I was blissfully unaware of all this at the time, so was Ron. Apparently, he had never used this instrument and it had been given to him when he helped clean out someone's warehouse. From then on, it just sat unused in his shed, so he was happy to lend it to me. I so wish he hadn't!

Ron's RF generator came with a frozen band-switch and a power lead with a missing plug. It also had old microphone output connectors on the front that are all but useless these days and so, with Ron's permission, I changed these connectors to the more common BNC type. I then fitted a new mains plug, lubricated the band-switch so that it rotated and powered the beast on.

Everything seemed to work OK. The indicator light on the front of the instrument came on with what seemed like normal brightness and, with my radios whistling away in the background, I could easily tell that the unit was working. I played around with it for a while and eventually felt confident that it could provide the signals I needed for my alignments.

Another clock radio

It was about then that I came across another Burgundy AWA 461 MA clock radio (just like the one my son gave me), this time on eBay. Happily, this one had all its knobs and it looked to be in very nice condition indeed with few, if any, scratches.

I accept that this is getting a bit like the story about grandpa's axe having had its handle and head changed several times, with the claim that it was still grandpa's axe. However, there was no way that I could get the cabinet on the set my son gave me to look as good as the one on eBay, so I entered the bidding war. It ended up being a tad expensive and it had to be picked up way across the other side of town but I was committed now and was obviously becoming more so as time went by.

When I went to collect my new radio, I discovered that it wasn't the only radio that the seller had. Like John, here was another enthusiastic collector of vintage radios who proudly showed me his assorted collection of different makes and models. During the tour, I reflected that while he had this amazing gallery of radios, I now had a sum total of just three. And mine were all the same!

My latest purchase proved to be as good a radio as advertised. The case had very few marks and its dial featured Victorian stations. The seller also kindly showed me how he polished his plastic cases with very fine grit emery paper and plastic polish. He even gave me some to take with me and I was beginning to think that it pays to look impoverished; people give you stuff!

Back home, I pulled all three radios apart and started with the clock mechanisms. Sadly, out of the three radios, none of the clocks worked reliably, so I had to swap assorted shafts and gears around in order to get a single working unit. This clock mechanism, by the way, incorporates the power switch, an alarm function and a devilishly-designed "snooze" function that is entirely mechanical.

The best knobs were then selected and popped into my ultrasonic bath to be cleaned up. They are far from perfect but are good enough and, at least, I now had a full set.

I then asked John if he had a frequency counter I could borrow so that I could get the alignment as accurate as possible. I wasn't worried about having the IF off by a few Hertz but I certainly wanted the radio stations to line up to the markings on the dial. Some radio station frequencies have shifted since this radio was made, of course, and some have even disappeared all together, but I planned to get everything as close as possible by following the prescribed alignment procedure.

Anyway, John presented me with an old Racal 9835 Universal Counter. He thought it worked OK but typically, when I turned it on, it didn't.

I opened it up and found that the AC/DC input selector switch on the front panel had fallen apart internally. As a result, I bought a standard slide switch to replace it but its plastic lever needed a lot of filing to make it fit correctly in the case opening. The frequency counter worked after that but I then noticed that the least significant Nixie tube wasn't lighting up.

Blast! I can't be sure but I'm confident that it would not have been working when John first gave it to me. And so, rather than have something else go wrong, I put the Racal aside and ordered a cheap but cheerful frequency counter from Asia (more money out the door). I also ordered some alignment tools online (no knitting needles for me) and when they finally arrived, I felt that I finally had everything I needed to align my radios.

The instructions provided with the Heathkit RF signal generator advised allowing some 15 minutes or so for both the radio and generator to warm up and "stabilise" before commencing

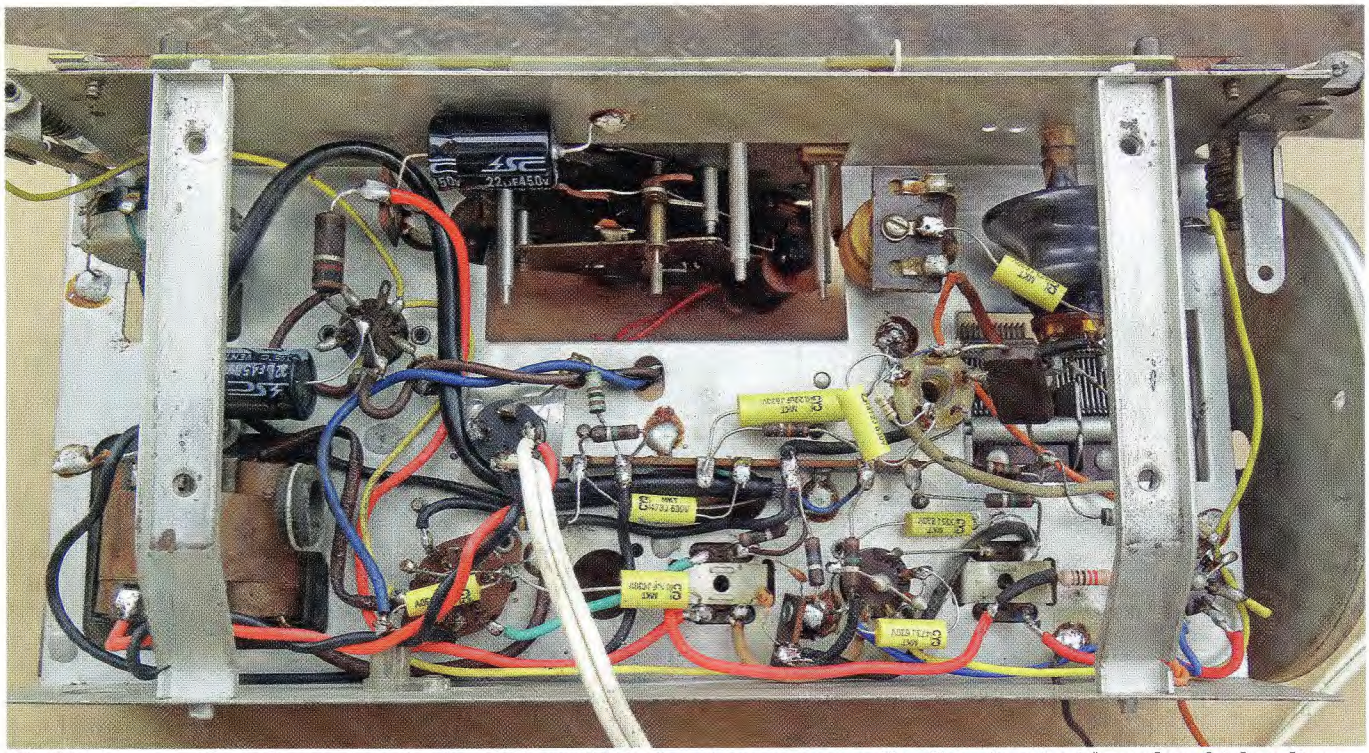

The black non-polarised capacitors in the AWA 461 MA's chassis were eventually all replaced with modern high-voltage equivalents, as were all the electrolytics. In addition, the twin-core mains flex shown here was later replaced with a 3-core flex so that the chassis could be earthed.

alignment. And so I dutifully switched everything on, set the generator to "modulate" mode, and left the room. I didn't know it then, but my problems were about to start in earnest.

What's that smell?

Twenty minutes or so later when I returned full of tea, biscuits and enthusiasm, I found my makeshift workshop awash with foul-smelling smoke. The Heathkit generator was hot and smouldering on the inside but luckily its metal case ensured that the internal fire hadn't spread.

Suddenly, the lack of a mains fuse in the device, plus the absence of any sound from our smoke detector in the passageway outside, seemed very scary indeed. So why had the generator gone up in smoke? And why had the smoke detector not sounded an alarm?

I thought I'd better tackle the smoke detector first. It was only four years old and it still gave out regular red flashes, indicating (you could say "pretending") that it was working. Replacing the fairly fresh battery and pushing the "test" button did absolutely nothing, so I had a dead smoke alarm. There was nothing for it but to buy and fit a new one.

I confess that having taken the alarm down from the ceiling, I noticed (perhaps for the first time) its now obvious "Test Weekly" notice. Prior to this incident, I was mildly proud of my conscientious annual smoke alarm battery swapping but let me ask you all this: who actually tests their smoke alarm weekly? Certainly not this little black duck.

I'm actually rather wary of the thing to be honest. Its 85dB horn is so loud that it would set my tinnitus-troubled ears ringing for much more than the prescribed week.

Anyway, I purchased and fitted a new alarm (which interestingly didn't have a weekly test notice) and committed myself to test it every now and again – with ear muffs on.

The power transformer inside the Heathkit RF generator ended up a charred mess because someone had modified the power supply.

Back to the generator

Once the new smoke alarm had been installed, I opened up the Heathkit generator to find the mains transformer a charred mess. It was well and truly cooked and a look at the schematic diagram indicated that this American-designed kit had a 110VAC transformer! However, this unit had obviously found its way to Australia and even though it wasn't fitted with an Australian mains plug, it did have a good-quality 3-core mains cord.

A closer look at what was left of the transformer showed that it had two primary windings wired in series, so I was confident that this unit was indeed designed to handle 230VAC. But why had it failed so dramatically?

At first I told Ron that his generator had fallen off the perch and that was it. However, as I had borrowed the thing, guilt drove me to try to return it in working order, regardless of what would be involved in fixing it.

To prove the lunacy of my quest to bring this thing back to life, it is worth noting that the price of an IG-102 kit from Heathkit in 1976 was the princely sum of US$44.95.

With Christmas fast approaching

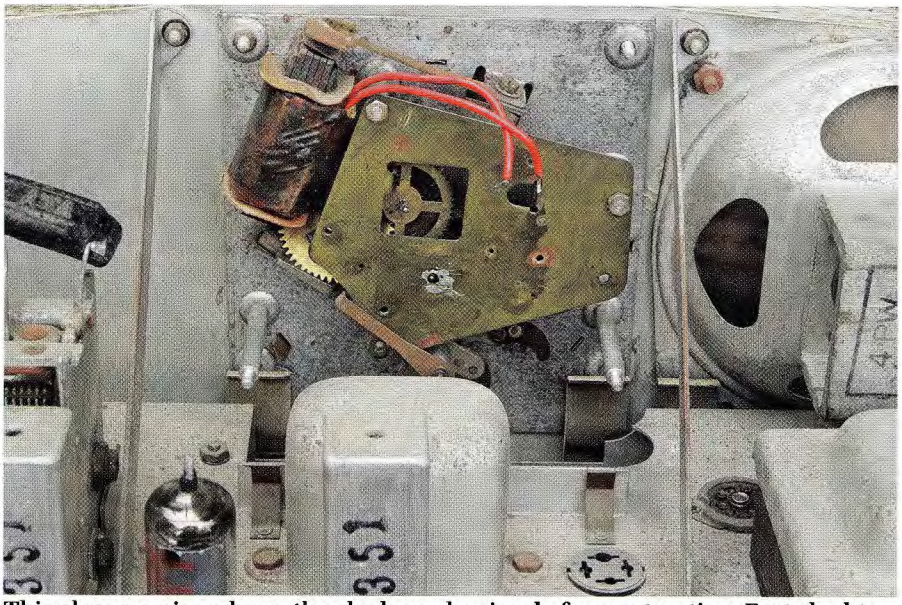

This close-up view shows the clock mechanism before restoration. Parts had to be scrounged from three different chassis in order to repair it.

and many requests from my family for gift ideas for the man who is impossible to buy for, I set my heart on a Siglent SDG 1010 arbitrary function generator. The more I looked at this product, the more impressed I was. This thing could do everything I needed in the signal generation stakes for the rest of my time on earth.

Santa duly arrived as expected and it was mine. As it is a digital device, I simply select the type of waveform I want, enter in the desired frequency and the output level, set the modulation and "voila", there it is. There's no need for a frequency counter now but should I need one, even that capability is built in.

The Heathkit's mains transformer obviously needed replacing so I contacted Southern Electronic Services in Dandenong South and gave them the specifications: one secondary at 120VAC 20mA and another at 6.3VAC 1.2A (for the valve filaments and power indicator lamp). They did a great job at a reasonable price and a few days later I had my replacement transformer. It was slightly larger than the original but a new mounting hole was drilled and it fitted in the case just fine.

I then pulled out the circuit schematic and had a close look at the Heathkit-designed power supply section. It showed a single solitary diode rectifier. Half wave rectification would you believe? Wow; very basic stuff indeed.

I found myself wondering why Heathkit hadn't added a few more diodes for a full-wave rectified supply. The decision was probably due to cost but I wasn't all that impressed.

Imagine my surprise then when I looked at the actual power supply components inside the generator and found that someone had, like me, decided that the power supply wasn't all that great and had built their own. However, in place of the original single diode design, he'd used a voltage doubler! What the . . .!

So the power supply, at least, was nowhere near the original design. It had all looked reasonably well built when I first looked inside but I now had no idea if anything else had been changed, was the right value, or was even the right way around!

I connected my multimeter to the output of this redesigned power supply and instead of the specified 130V, it read 300V! As the valves warmed up and drew some current, this voltage fell to 220V or so but that was still way over what it was supposed to be!

But that wasn't the only surprise. When I switched the "modulation" function on, the voltage dropped to 50V! So what was going on here?

The cause was easy to find. The modulation select switch had a 500nF capacitor off one leg that was rated at 200V but it was now acting as a straight piece of wire. In other words, it was a dead short which went some way towards explaining why the transformer had burnt out. Replacing it with a new 600V-rated component solved that particular problem.

According to the documentation I found on-line, the original power supply featured a dual 20µF 200V capacitor that was fitted inside a single tubular case. I found a picture of one at http://www.wb0smx.net/?p=1910 but sourcing the exact same unit would probably now be impossible.

After some thought, I decided that the easiest thing to do would be to rewire the power supply so that it was close to its original design. The electrolytic capacitors used in the doubler were marked 24µF but measured 29µF on my capacitance meter. That seemed OK, so I used two of them with a new 2.2kΩ 1W resistor between them as the original schematic specified.

I did make one change though. I couldn't help myself and replaced the single diode with a bridge rectifier. While this would give a slightly higher voltage than a half-wave rectifier, it would also have far less ripple, which in an instrument such as this seemed desirable.

Low RF output

With the nightmare realisation that the unit might have been modified fairly heavily in other areas, I then explored further. The unit featured a "modulation out" port that was meant to supply an audio signal at around 400Hz. This was working – but at 180Hz!

It didn't take long to discover that the 0.01µF oscillator capacitor (C16) was way off tolerance and replacing that brought the frequency up to a more acceptable 330Hz. However, the RF output level was miserably low, so much so that none of my counters would register a signal unless the output was set to the absolute maximum.

A closer look around the pentode output stage of the 6AN8 revealed some clues. First, the cathode resistor had been changed to 470Ω instead of the 39Ω value specified on the schematic. This 470Ω resistor was a 1W device and it had been getting hot! Plate drive resistor R11 had also been getting hot and was now effectively open circuit, so I replaced it with a new 680Ω unit.

The RF signal strength was still negligible at the BNC connector so I checked the input signal at the grid of the 6AN8 pentode. It looked OK as did the nice 40V peak-to-peak signal at the anode. However, this healthy signal was being heavily attenuated by

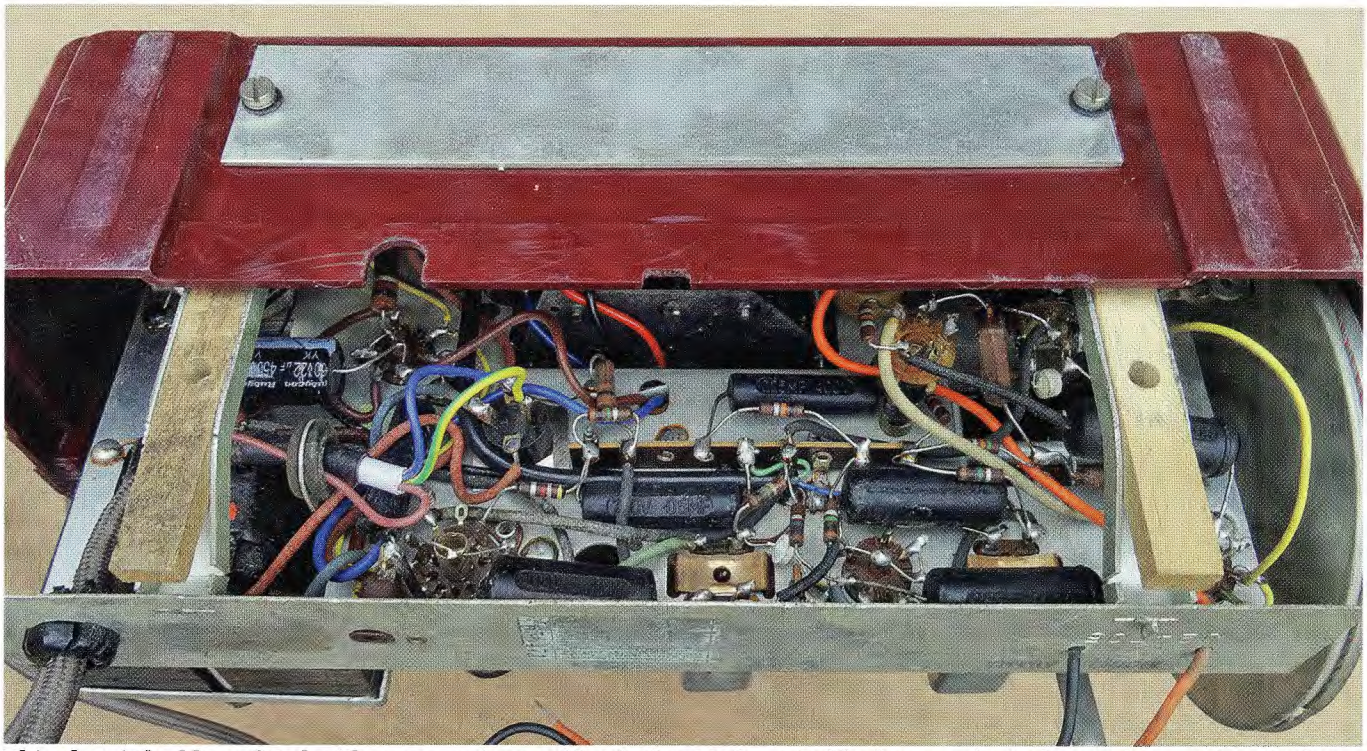

This chassis had been fitted with a new mains cord but had yet to have its black non-polarised capacitors replaced when this photo was taken. All three radios worked after restoration but only one had a working clock.

the time it got to the output connector.

All that sat between the plate of the pentode and the output connector was a coupling capacitor and a few resistors. I replaced the capacitor first but it made no difference. Unfortunately though, I was really flying blind and I really needed to know what the output signal strength should be.

I downloaded several copies of the user and construction manuals but typically, while the index of every single one told me that the specifications were on page 32, that was always the one page that was missing. Just that one wretched page – give me a break. I then turned to YouTube and took a look at some of the world's most boring videos of guys describing the minutiae of this particular RF generator. And as near as I could tell from these mind-numbing monologues, the output is just 0.1V into a 50-ohm load.

Google also subsequently led me to a couple of comments about the low output of these generators and how some owners had done away with the valves altogether and installed FETs! The logic here was that the 6AN8 was struggling to provide a decent signal into a 50-ohm load. Others had simply replaced 47Ω attenuation resistors R14 and R16 with 220Ω resistors to increase the output.

This was considered valid since the generator didn't have a calibrated output as such. In addition, increasing the value of these resistors to lift the output level would also improve the signal-to-noise ratio.

So what did I do? I took the easy way out and replaced the 47Ω resistors with 220Ω resistors as suggested and, at last, finally had a working generator. It now gave me 400mV peak-to-peak at maximum output and while it's nothing like the 20V peak-to-peak (into a 50-ohm load) that I get from my Siglent, at least it's usable.

In retrospect, it's just possible that the low output problem was the very reason that the power supply was so heavily modified in the first place. It certainly allowed the unit to work when I first turned it on but, of course, it didn't last long.

I won't tell you how much this all cost in time and money because Ron may read it one day and say "you shouldn't have" and I will be forced to punch him on the nose.

Remember the radios?

With the Heathkit generator all done and dusted, I finally got back to looking at the AWA 461 MA clock-radios. Remember them?

From this point on, it was all something of an anti-climax because, in each case, the alignment procedure went along fairly smoothly. I could select 455kHz exactly with my Siglent generator and, with 400Hz of modulation, could easily tweak the IF cores for maximum output on my scope. The front-end coils and capacitors were then adjusted for maximum antenna sensitivity and to align the stations with the dial.

The three radios varied in their performance characteristics, so I simply picked the best-performing chassis for my final radio. I then straightened the large dial pulley to ensure that it was exactly square with the tuning shaft (necessary to stop the tuning cord leaping off the pulley every now and again) and shortened the dial cord a tad to increase the cord tension and make the tuning as reliable as possible.

With the main radio finally assembled and looking the part, I turned it on. The reception was still awful for the reasons I had described earlier but it was particularly bad now because, given the festive season, I had covered our property at her majesty's insistence with Christmas lights; you know, the ones that flash on and off all the time and generate interference.

Not much of the original radio that my son gave me was used in this set; only a knob and a clock shaft or two. But he'll never know . . . as long as you don't tell him! **SC**