Vintage Television

By Ian Batty

Sony's TV8-301: the world's first direct-view transistor TV set

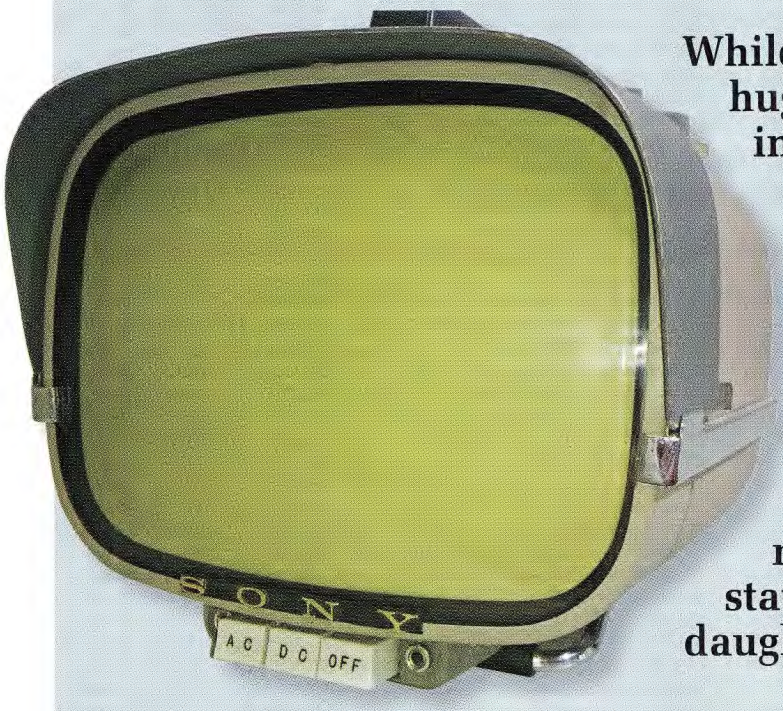

While TV sets were being made in huge numbers around the world in the late 1950s, they were all complex valve circuits typically driving 17-inch cathode ray tubes (CRTs). Portable transistor radios from Japan were well-known but there was no portable direct-view TV set. Then Sony produced an incredible new design, with an all solid-state motherboard and three daughter boards.

Amidst the ruins of postwar Japan, in 1947 young Masaru Ibuka and his friend Akio Morita set up Tokyo Tsushin Kogyo – Tokyo Telecommunications Engineering Corporation – ultimately to be known as Sony. Their first product was an electric rice cooker but the company quickly got into electronics, repairing radios, many of which had been stripped of their short-wave sections.

As in Nazi Germany, the Japanese government had wanted to prevent its citizens from listening to anything but local propaganda on Medium Wave and Long Wave. So Sony made a tidy profit with their first electronic gadget, a short-wave converter for broadcast-only radios. They moved on in the 1950s to making tape recorders using oxide coatings on a paper strip base.

Sony had acquired the tape-recording patent for ultrasonic bias from Anritsu, principally known today as an instrument company.

This allowed Sony to begin their progress in magnetic recording. Their instruments were adopted by the courts and schools, establishing the company as a prestigious, high technology manufacturer.

Following Ibuka's visionary trip to attempt to sign a licence with Western Electric, Sony acquired patent rights for the transistor and began manufacturing portable radios in 1955.

Preferring NPN transistors for their better high-frequency response, Sony were initially unable to produce working examples. In those days, the Bell Lab's research was "like the word of God". After much discussion, the research laboratory's head, Makoto Kikuchi, suggested laying aside Bell's experience.

Sony's labs then dropped Bell's preferred indium as a doping agent and substituted phosphorus. It soon paid off, allowing Sony to produce the transistors used in their first transistor radios.

Portable television receiver

Sony's approach to portable television design was far ahead of Philco, who had just beat them to market with their first set in 1959.

Rather than taking the Safari approach (described in the November 2014 issue: http://siliconchip.com.au/Issue/2014/January/Philco+Safari%3A+the+first+transistor+portable+projection+TV+set) with a compromise

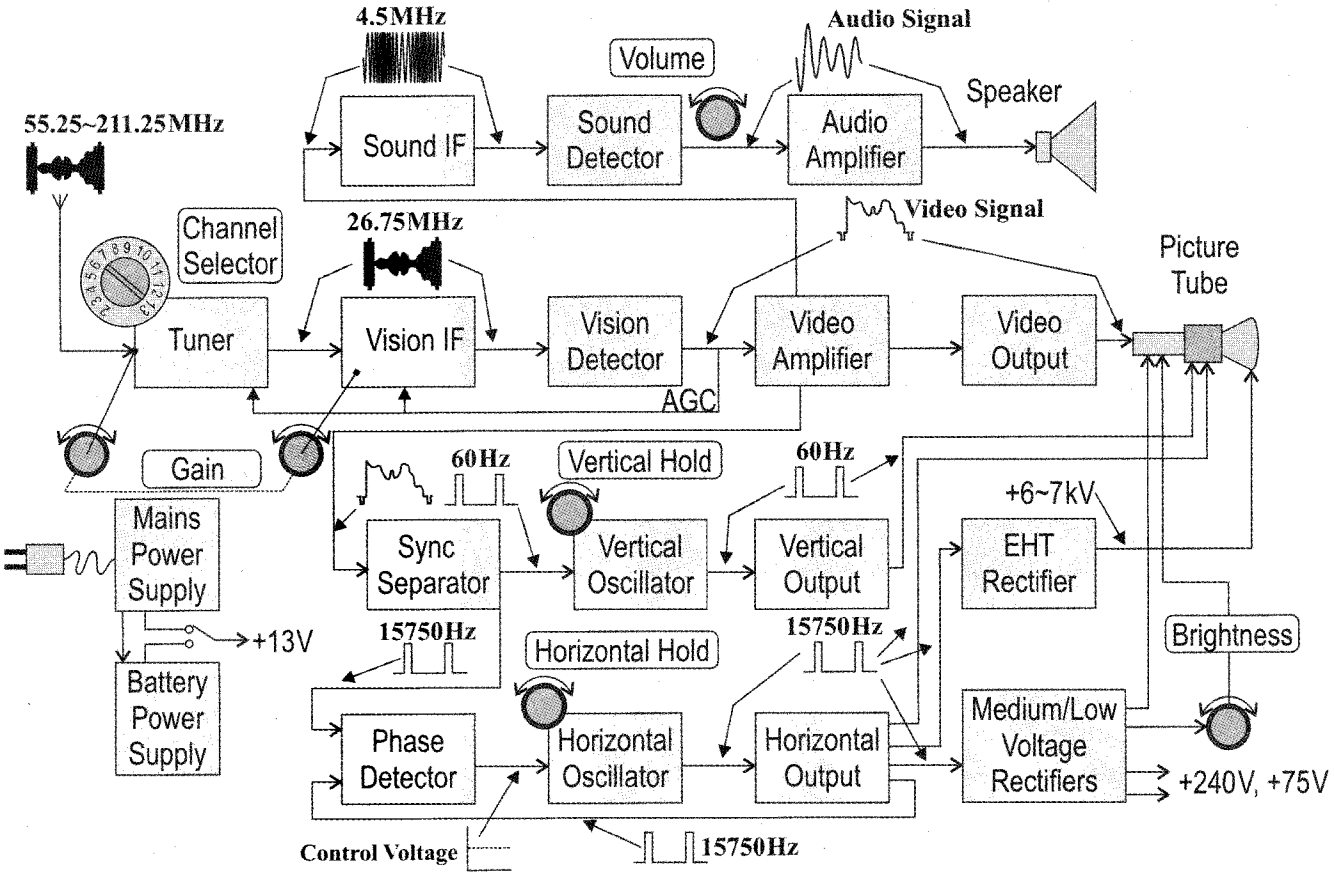

Fig.1: block diagram of the Sony TV8-301. This is the US version of the diagram, showing 60Hz field frequency and a 15750Hz (525 × 30) horizontal sweep frequency. Note that it also has the sound IF at 4.5MHz instead of 5.5MHz used in the PAL system in Australia.

design needing space-hogging optics, Sony built a "proper" portable television set, the TV8-301, with an 8-inch CRT.

Its style, like Bush's iconic TR82C radio (described in the September 2013: http://siliconchip.com.au/Issue/2013/September/Best+Of+British%3A+the+Bush+TR82C+Mk.2+transistor+radio), was unmistakably modern. Its sleek grey case, far from being dull, adds an understated finish later seen in many laptop computers.

But styling is only a superficial aspect of the design. The circuitry and physical arrangement of the chassis was far ahead of anything produced at that time. As well as being almost entirely solid-state, all of the circuitry was on PCBs. Mark that; PCBs; plural, not singular. At that time, very few manufacturers anywhere in the world were making a TV set based on PCBs. One of the very few was the American company Admiral but its sets were still all-valve designs.

Apart from its mostly solid-state circuitry, the outstanding feature of this first Sony TV set was that it had a motherboard and three plug-in daughter boards. Decades later, motherboards and daughter boards would become common-place in computers but this was 1959!

I bought this set quite a while ago when I was teaching in Hong Kong. It is the TV8-301W US version. The 301E is the model for Western Europe while the 301T is a special version for Italy.

Circuit description

The block diagram of the circuit is shown in Fig.1 and is quite similar to the previously mentioned Philco Safari set. Indeed, most early solid-state TV sets follow pretty much the same design.

The TV8-301 uses 23 transistors (a mix of PNP and NPN types), 18 semiconductor diodes (19 in the –E and –T models) and three tubes: the two high-voltage rectifiers and the 8-inch CRT. The transistors are all made by Sony but conform to the Japanese "2SA/SB/SC" type numbering, so data and replacements can be determined.

The 13-channel tuner is a turret design though not using the traditional "biscuits" we're familiar with in TV sets manufactured in Australia. Each stage's inductors are mounted on a rotating disc, giving individual inductances for each channel but without the mechanical complexity of the traditional turret tuner. This combines simplicity with the ability to adjust each channel individually.

This TV8-301 is a VHF-only set, UHF transistors not being available at the time of production. Its tuner uses an RF amplifier, converter and separate local oscillator. It has four IF stages, each with neutralisation but operating at only 26.75MHz. All the transistors in this part of the circuit are PNP types, so their emitters are fed from the positive supply and collectors are connected via their transformers to ground.

A separate detector feeds an AGC amplifier for application to the first and second IF stages. And like the Safari, the TV-301 uses simple "envelope" AGC that responds to Average Picture Level (white), rather than to peak signal strength.

The TV8-301 lacks DC coupling in

The adjustment knobs at the back of the set are, from left to right: gain/contrast, brightness, horizontal hold and vertical hold. The large knob at left is for channel selection and the outer ring is for fine tuning. The unmarked volume control is forward of the channel selector.

The rear of the Sony TV8-301 set shows the AC (USA 117V) and DC (12V) power socket at top left. The large central two pin connector is used to power the set from an external 12V battery. At top right is the whip antenna, with the unbalanced and balanced antenna sockets just below it.

the video amplifier and lacks a DC restorer, both of which are needed to ensure a constant black level.

The video section begins with a conventional diode demodulator, feeding an emitter-follower first video amplifier stage and the sound pickoff trap. The main video amplifier's gain is controlled by a variable resistor in the emitter bypass circuit. This would usually be the contrast control but it's a preset.

The user-adjustable "Gain" control, acting to attenuate the incoming RF signal and control the IF gain, gives the same effect as the usual contrast control. Does this seem familiar? Many earlier valve radios used a similar attenuating/gain design for the their volume controls.

The gain control RF attenuator between the aerial connection and the input to the tuner is combined with a complex variable-bias system applied to the above-mentioned AGC circuit that controls the gain of the first and second vision IF stages

It's usual to allow the RF/IF channel to manage its own gain automatically, and to design it to deliver some 1~3V peak-to-peak either to the contrast control or to an amplifier with its gain subject to the contrast control.

I can only assume that Sony's engineers found their design vulnerable to overloading on strong signals and included the RF attenuator as a solution.

The inherent inductance and capacitance of ordinary volume pots, which vary with frequency, make such an attenuator the exception in RF circuitry. The actual contrast control is a variable-gain affair in the emitter lead of the output transistor, but it's a preset and not accessible to the operator.

The picture tube is a 21cm/8-inch diagonal 210HB4, 90 degree type made by NEC. The larger size helps explain the high accelerator and focus voltages, and video drive, compared to Philco's 2-inch 2EP4.

The video amplifier runs off a 75V DC supply, allowing a full video output of around 60V peak-to-peak. The sound channel begins with the pickoff at 4.5MHz from the first video stage. This sound channel's design, including the Foster-Seeley demodulator, is very similar to that of the Safari but with a higher output of 300mW.

The balance of the circuitry, involving nine transistors, with eight low-voltage and two high-voltage diodes,

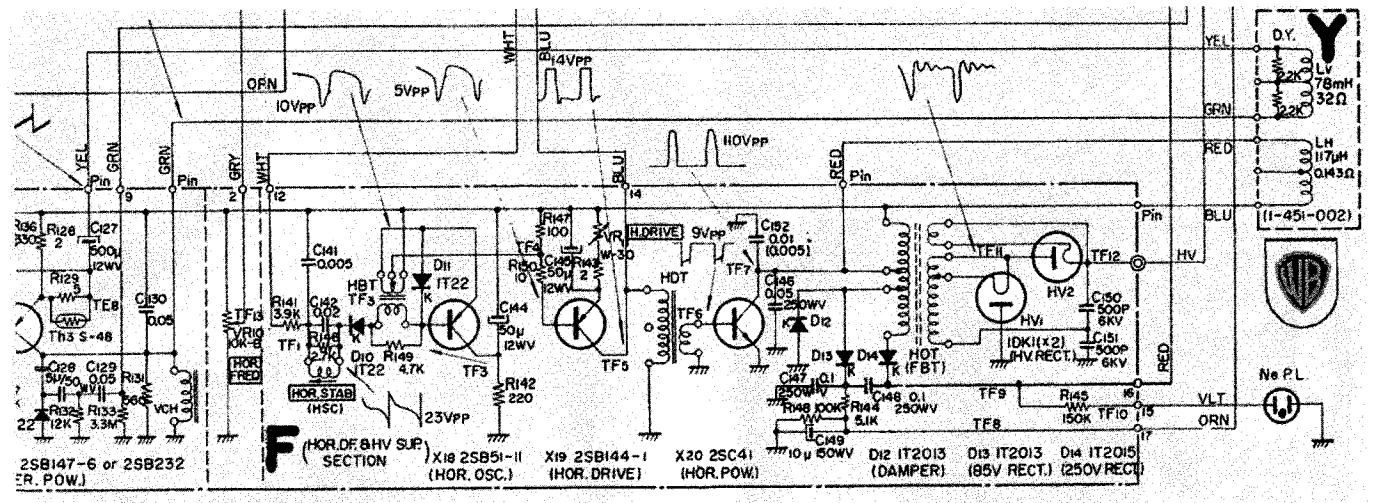

Fig.2: this small section of the complete circuit shows the horizontal output stage (X20) which drives the deflection yoke. The horizontal output transformer (HOT) has a high voltage winding which drives the two thermionic diodes (HV1 & HV2) in a conventional voltage doubler rectifier circuit, to provide the +240V boost voltage for the CRT.

separates the vertical and horizontal synchronising (sync) signals, produces the vertical and horizontal deflection power for the picture tube, and provides medium and high voltage supplies. These transistors are a mix of PNP and NPN types. The TV8-301's vertical deflection circuit is similar to that of the Safari.

The horizontal deflection circuit is also similar to that of the Safari, with the principal differences being that the medium and low-voltage supplies are derived from the horizontal output transformer.

The TV8-301 generates a single medium-voltage +240V boost supply, by rectifying the large flyback pulse generated at the end of each scanned line as the horizontal output transistor is cut off and the deflection transformer/deflection coil magnetic fields collapse. The boost supply connects directly to the CRT as well as feeding +75V to the CRT and the video output stage via dropping resistors.

Since the video output and CRT derive power from the horizontal circuitry (as shown in Fig.2), a set that gives "sound but no picture" is probably (like most TVs) indicating a loss of horizontal deflection.

The main power supply uses a step-down mains transformer feeding 15VAC to a bridge rectifier. After filtering, the set receives +13V for all stages not fed by the horizontal output stage. The set can also run on an external 12V battery, rechargeable from the mains supply, or from a car battery adaptor lead.

The major controls are clustered towards the set's rear, allowing clean cabinet lines that follow the CRT's outline (a similar styling approach was taken with the very popular Pye Pedigree TV set manufactured years later). The only oddity is the un-labelled volume control: it's the tall knob forward of the channel selector.

Servicing and repairs

Unlike the Safari's "board on each side", the TV8-301 uses the above-mentioned motherboard and the three daughter boards sit like horseshoes over the neck of the CRT, giving a tightly packed assembly. This modular approach makes it easy to service. Deflection fault? Just pull the entire deflection board and swap in a good one.

While this simplifies servicing, it does make repairs difficult. Boards will only work when plugged in to the motherboard, so extenders of some kind would be necessary to "sit" the boards up for easy access.

In practice, I found myself removing a suspect board, soldering a lead to a test point, then reinserting the board and testing. It's regrettable that items such as extender boards and other special tools are almost always junked as service centres downsize.

Philip Nelson's online article reports circuit board connector tarnishing, with a distinctive "fingerprint" pattern. I discovered very similar evidence – maybe we can get a forensic investigation team in and track down the culprit some day! Seriously, such deposits can cause long-term corrosion and bring otherwise fine and reliable equipment to a dead stop. Cleaning is easily done with alcohol and a Scotch-brite or similar scourer; definitely not steel wool.

Chassis removal

The main chassis slides "neatly" in to the case. Removal should be straightforward; undo the side and rear securing screws and slide the chassis out. Pry marks on the mating lip are a sure sign that someone hasn't undone all screws before attempting disassembly. Be sure to also unscrew and loosen the underside speaker housing so that the cabinet's speaker slot can expand and ease extraction.

Getting it going

Although I didn't pay much attention at first, my TV8-301's channel indicator light was dead. But so was the screen. It turns out that the channel indicator lamp is a neon running from the 240V DC supply picked off from the horizontal output stage.

So if you've got a TV8-301 with no picture and no channel indicator, don't suspect a dud tube, dead EHT rectifiers, burnt-out horizontal output transformer or other catastrophes. Maybe it's just what I found – the horizontal drive setting is incorrect.

So starting with a dead set, the questions was where to start? Connecting power to the battery input connector gave nothing. On examination, one contact leaf of the Off switch had been bent up away from the sliding contact. Gentle pressure returned it to its tensioned position.

Now, applying power brought up sound but no picture. As well, it began

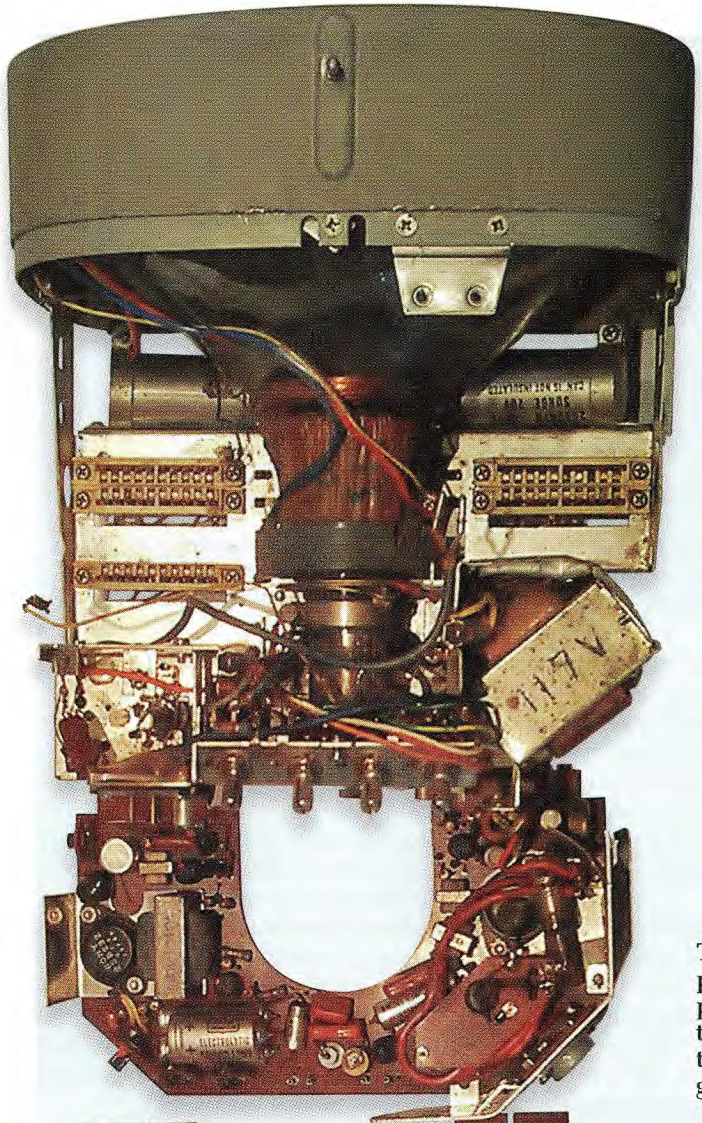

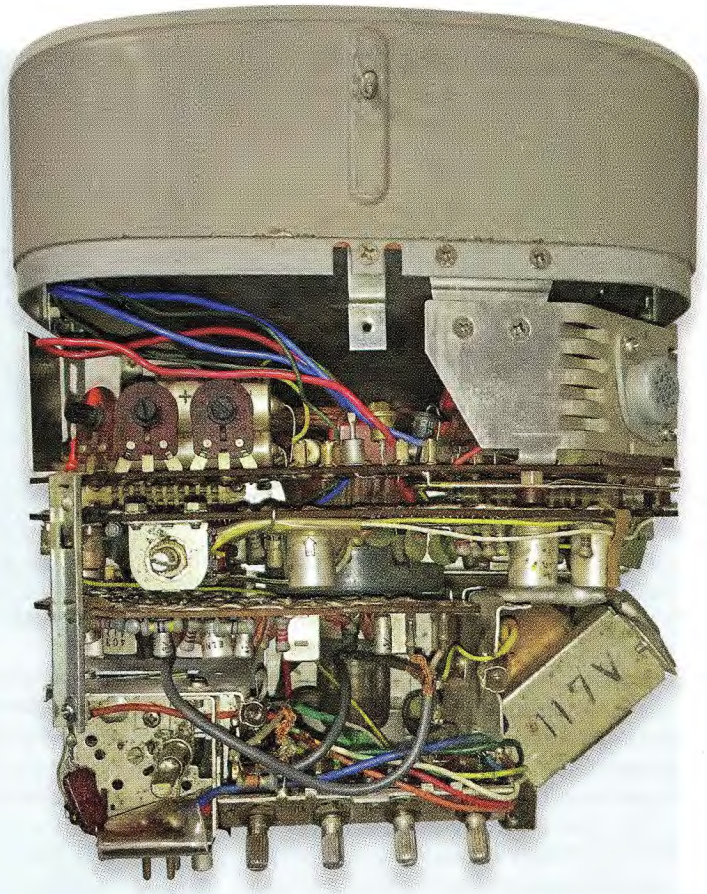

These two views inside the Sony TV8-301 show the densely packed assembly when the three daughter boards are in place. On the left, the daughter boards have been removed to reveal that they are ordinary phenolic PCBs. Note that the fingers of the daughter boards do not have their contacts gold-plated, so tarnishing of the copper was a problem.

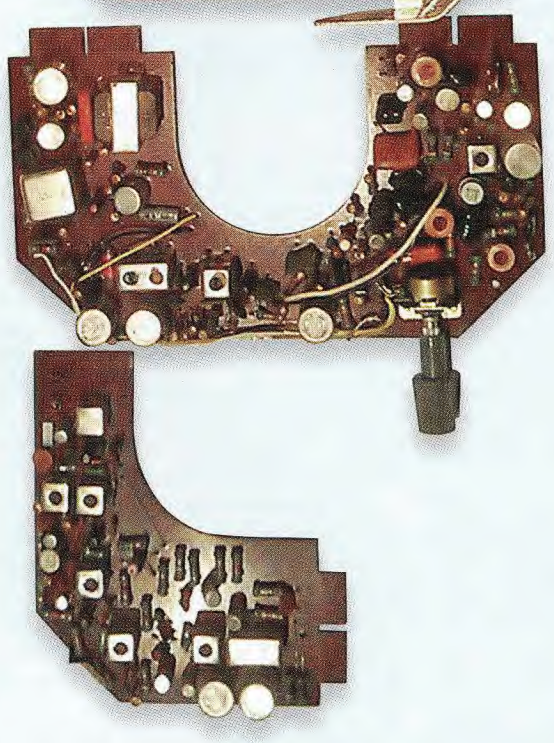

to smell hot. After turning off the power, I found that X20, the 2SC41 horizontal output transistor, was hot to the touch.

A shorted horizontal output transformer or shorts in the high-voltage supplies are the most common causes; the transistor is switched into full saturation for some half of each horizontal line, so a short-circuited load (due to any cause) will see it drawing a lot of collector current.

But it was just getting hot; not cooking. OK, did I have any high-voltage outputs? Yes, the B+ Boost was about 120V, about half the correct value and the EHT measured about 1.5kV, so I didn't have a shorted output transformer. Sigh of relief!

The output transistor's collector waveform was distorted and less than its listed voltage of around 110V peak-to-peak but again, a badly-shorted output circuit would have cut this pulse down to a few tens of volts.

A careful look at the rectifier valves (EHT rectifier) inside the high-voltage screening failed to show any sign of lit filaments, but these are subminatures that don't glow very brightly and the other low outputs probably meant that I wouldn't see them lighting up either. In fact, the EHT rectifier comprises two diodes in a voltage doubler circuit. These are the only thermionic devices in the whole circuit (apart from the CRT). This would have been neces-

W: for U. S. A. E: for Continental Europe (excl. France, Monaco, Italy & OIRT members) T: for Italy

Specifications

Picture Tube:	210HB4 8 inches, 90-degree Deflection Aluminized Screen, Automatic Control Focus, 8½" in Length
Semi-conductors:	23 Transistors and 18 (19 for 8-301E & T) Diodes
Channel Coverage:	A-2 to A-13 (8-301W), E-2 to E-11 (8-301E), A to H (8-301T)
Scanning System:	Interlaced 525 (625 for 8-301E & T) Lines, 30 (25 for 8-301E & T) Frames per second
Sound System:	4.5 (5.5 for 8-301E & T) Mc Intercarrier System
Maximum Sensitivity:	Approx. 30μV at Antenna Input for All Channels
With Built-in Antenna:	Receives up to 62 miles in flat terrain
With External Antenna:	Receives up to 93 miles in flat terrain
Intermediate Frequencies:	Video 26.75 Mc Sound 22.25 Mc (21.25 Mc for 8-301E & T)
Video Band Width:	3.0 Mc/−3 dB (3.5 Mc/−3 dB for 8-301E & T)
Resolution:	Vertical 400 lines Horizontal 250 lines
Audio Output:	300 Milliwatts with 10% Distortion
External Antenna Input:	300Ω balanced, 75Ω unbalanced
Speaker:	4"×2½" PM Dynamic
Earphone Jacks:	2
Power Requirements:	DC 12 Volts, 13 Watts AC 50/60 cps 117 V (220 V for 8-301E & T) 19 Watts Car Battery provided 12 Volts
Batteries:	12 Volts (Two Units of 6 volts) 3 Ampere Hours, Lead Acid, Leakproof
Life of Batteries:	More than 100 recharging cycles under proper maintenance
Recharging Hours:	7 to 10 Hours with Built-in Charger
Dimensions:	Main Unit 8¼"(W)×7"(H)×9"(D) Battery Case 6¼"(W)×3⅞"(H)×2"(D)
Weight:	Main Unit 13 pounds Battery 4 pounds

SONY®
SERVICING GUIDE

Above: this part of the servicing guide for the Sony TV8-301 shows the general specifications of the set for various regions in Europe and the US.

sary because semiconductor diodes at the time did not yet have sufficiently high PIV ratings.

Lifting the EHT doubler's connection had no effect on the B+ boost. Reconnecting the EHT and removing the B+ boost had no useful effect either. So what about the drive to the horizontal output transistor? The transistor needs enough drive to force it into saturation, so low drive will give low deflection and, more importantly, low output from supplies run off the output transformer.

Careful checking showed that the horizontal output drive was too high. Odd. A simple tweak brought the output stage's drive voltage back to its correct value of around 9V peak-to-peak. This took the transistor out of overdrive (which I assume was being rectified at the base and putting it close to cut-off for too long).

With the drive voltage fixed, the set came to life. I also noticed a distinctive glow from the two EHT rectifier filaments. And the channel indicator came on.

After that, there was not much more to do, really. Check all other voltages, adjust the horizontal and vertical hold presets to run at 15625Hz and 50Hz for testing here in Australia, and that was about all.

The set's original 4.5MHz FM sound channel works just fine, since my benchtop RF "beamer" has had its sound channel dropped down from 5.5MHz (Australian PAL) to the NTSC value of 4.5MHz. This was described in the previous article on the Philco Safari.

Using it

It looks, feels and carries like a portable telly should. It sits easily on a table or bench, without the Safari's top-heavy appearance that suggests blowing over in the mildest of breezes. Since the CRT faceplate "fronts" the set, it is quite subject to screen reflections.

The viewing hood does help with overhead illumination but even more than with the Safari, careful placement helps in viewing.

The 300mW audio output is fine for indoors and adequate for outside use.

And how good is it? Pretty good, actually. It's the first TV set I've worked on that specifies an RF sensitivity. Sony claim "30 microvolts". In practice, this is the minimum for a usable picture but it does at least help in determining whether the set's gain and sensitivity are up to spec.

At eight inches (200mm/20cm) diagonal the screen is large enough for viewing by two or three people. And like Sony's later revolutionary "Walkman" (first generation), there are two earphone sockets for "buddy" listening.

Would I buy another? Maybe. They do appear from time to time, though I've not seen the –E version, which would work directly on any CCIR/PAL RF converter, with its 5.5MHz sound IF. Perhaps one for the shed, one for the verandah?

At least two different circuit diagrams exist. One shows an incorrect waveform (about 110V peak-to-peak) at the collector of X19, the horizontal driver transistor. This should be the waveform for the X20 horizontal output collector, and is correct in the diagram available from www.radiomuseum.org

Further reading

A complete repair article appears on Philip Nelson's fine website, along with many other restoration articles at: www.antiqueradio.org/Sony8-301WTelevision.htm

I must thank Ernst Erb for the schematic, from www.radiomuseum.org

A complete description of horizontal output stages appears at: www.earlytelevision.org/damper.html SC