# Vintage Radio

By Associate Professor Graham Parslow

# Philips 1953 portable 5-valve model 148C radio

*Photo courtesy of Kevin Poulter, President of HRSA*

**The Philips 148C was one of a series of portable radios produced by Philips under different brand names, including Mullard and Fleetwood. All had the same construction and broadly similar circuitry. Their common case was an interesting design, with all controls and the dial concealed by a shutter. Finally, the case panels were made from aluminium, a fairly exotic material in the later 1940s and 1950s.**

We now take the aluminium can for granted since billions of them are made every year. However the first aluminium products were extremely expensive. The original Auld Mug of 1857 (The America's Cup) was made of aluminium and predated industrial production that commenced in 1888.

Two world wars necessitated quantity production of aluminium for aircraft. Aluminium gathered mystique from its use in aircraft while becoming ever more available for other uses in the 1940s. It is surprising that Philips were one of the few radio manufacturers to use it for making a case, although RCA in America manufactured a nearly identical case.

Regardless of the lightness of aluminium, the weight of the Philips 148C is a substantial 6.3kg, even without batteries. In fact, it is only the outer panels which are made from aluminium while the end panels are of Bakelite. The chassis is steel and the internal construction is fairly conventional for the time.

The Philips 148C is a full-featured superhet with an RF stage. With the exception of the full-wave rectifier (which is a 6V4 in my set but could be an EZ82), all of the miniature valves are battery types such as 1T4 and 1R5.

Its RF stage makes it a sensitive performer and it readily pulls in weak stations. While it might be thought that the aluminium panels would offer a degree of shielding and would thus reduce signal pickup by the aerial coils, they have little practical effect in this regard.

**Since the Philips 148C has its two aerial coils integrated into the case, temporary wiring was needed to connect the coils up for testing.**

Opening the shutter on the front of the case reveals the two controls (one for volume and one for tuning), at opposite ends of the slide-rule dial.

The shutter actually operates the On-Off switch while the changeover from battery to mains operation is achieved by inserting the mains plug into the socket on the rear of the case.

These switches are worked by springs and levers that add complexity to the mechanical construction of the radio. A friend who ran a radio repair shop told me that he spent a day changing the volume control on one of these radios because of the way the shutter-operated switch made access to the volume pot so difficult.

The front end has two separate loop coils for the aerial and these are built into both ends, using the Bakelite mouldings as retainers. Although the ends look the same externally, the left and right differ internally to accommodate the coils and their terminations.

As can be appreciated from the accompanying photographs, having two aerial coils added to the challenge to set up this radio on the workbench, after the casing was disassembled for restoration.

The short fly leads from the radio to the aerial coils must be unsoldered to remove the chassis. This means that temporary wiring is needed to connect the aerial coils for working at the bench.

## Circuit details

The aerial coils are wired in series and act with the first gang of the three gang tuning capacitor (C1) to provide RF input to the 1T4 RF preamplifier valve. A second tuned circuit involving (C2 and L5) feeds signal to the grid of the 1R5 mixer-oscillator valve. The 1R5 additionally receives tuned input from the local oscillator formed by C3 and L8.

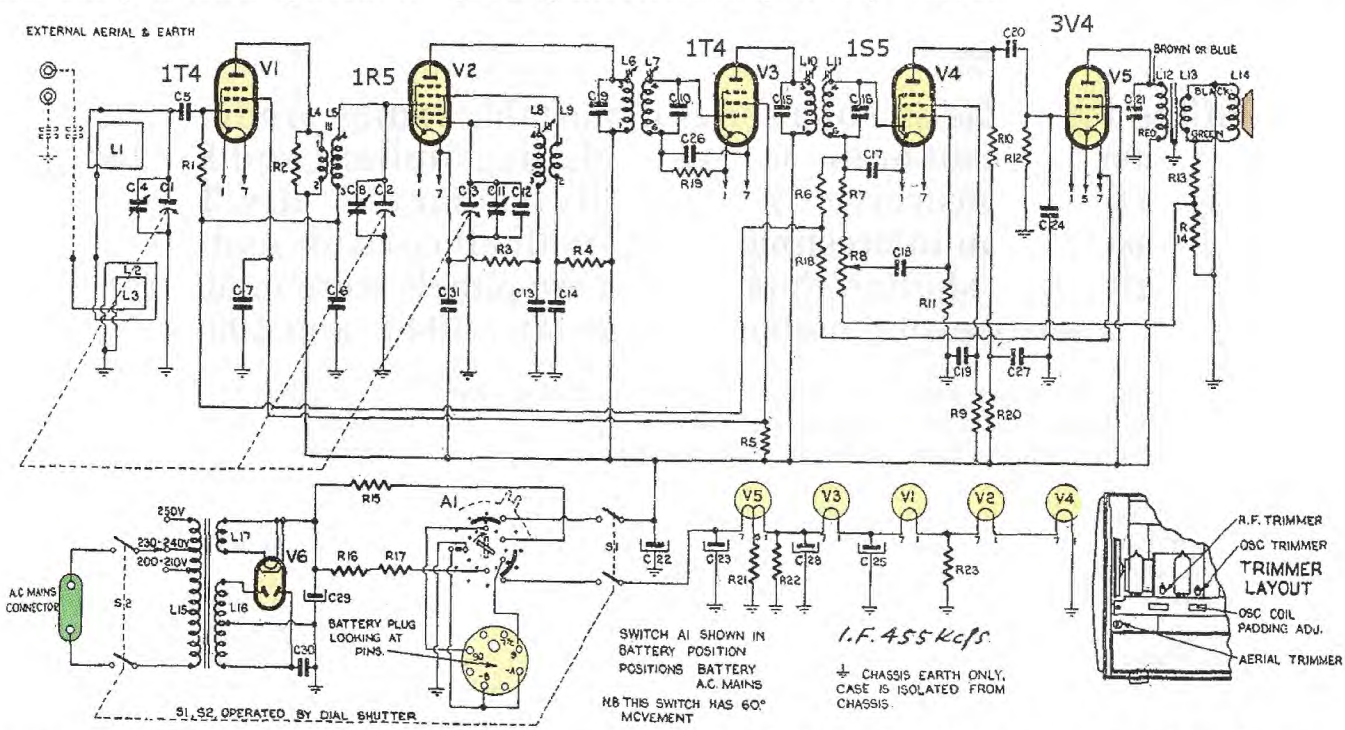


**Apart from the full-wave rectifier which enabled operation from the 240VAC mains, all the valves are miniature battery types and it is a conventional superhet with a tuned RF amplification stage.**

The intermediate frequency is 455kHz and is selectively passed on by the first IF transformer to the IF amplifier valve, another 1T4. The two IF transformers are of the relatively miniature type that Philips developed in the early fifties. The preceding model, type 148 of 1950, featured full-size cylindrical IF coils.

The tuning capacitor is also relatively small, with brass plates (not aluminium). Even so, this is still a cluttered layout with difficult access to many components, as can be seen from the picture of the front of the chassis with the speaker removed.

The 1S5 detector and audio preamplifier has only one diode that serves the double function of detection and providing AGC to the first two valves via resistors R6 & R1 and inductor L5.

The volume control potentiometer changes the signal level fed to the grid of the 1S5. The preamplified audio signal then passes to a 3V4 pentode output stage proving a modest level of 250mW or so. In practice this is quite satisfactory when coupled to the 6-inch Rola type H speaker.

Oddly, Philips reduced the speaker to a 5-inch unit in later variations of this radio (model 168). To my ear, the later ones do not sound as good as this one.

The one series valves (1T4, 1R5 and 1S5) are the standard set for portables of the late 1940s and the 1950s, used by almost every manufacturer. In combination with the 3V4 output pentode these valves were a proven combination for performance and efficient battery usage. They are not rare but the 1R5 and particularly the 3V4 are prone to fail and are becoming harder to obtain.

The radio ran at 90V HT with a drain of 10mA and 9V LT with a drain of 50mA. For portable operation, the battery was a combination type incorporating 90V and 9V sections, such as the Eveready 753, and was connected via a single plug.

For mains operation, the 6V4 full wave rectifier produces the HT and the LT, using ballast resistors to reduce the voltage to 9V for the series-connected valve filaments. The "one" prefix on the valves indicates a nominal filament voltage of 1V, but these valves barely operate at one volt.

Greater than 1.2V is needed to ensure efficient emission from the filaments. The 3V4 (V5) nominally requires 3V for the filament, however this is two 1.5V filaments in series and in parallel the filaments can work from 1.5V.


**The unrestored aluminium case with the dial shutter closed and badge removed. The radio does not have an on/off switch, but instead is turned on by opening the shutter.**

## Restoration work

The anodised aluminium case had developed a patina of green and looked tired. After cleaning with a degreaser it was resprayed with an automotive chrome finish.

*Editor's note: some readers may object to using a sprayed metal finish rather than restoring the original aluminium finish. However, after many decades of use, surface corrosion, deep scratches and pitting make it very difficult to obtain anything like the original finish. Anodising is not a simple process and it involves dyes. This is a satisfactory and practical compromise.*

The Bakelite end pieces were polished with car wax. The yellowed dial cover with a hole (see picture of the front of the chassis before restoration) was replaced with acetate sheet, heat-moulded to shape.

This was challenging because the width needs to be precise to fit into the

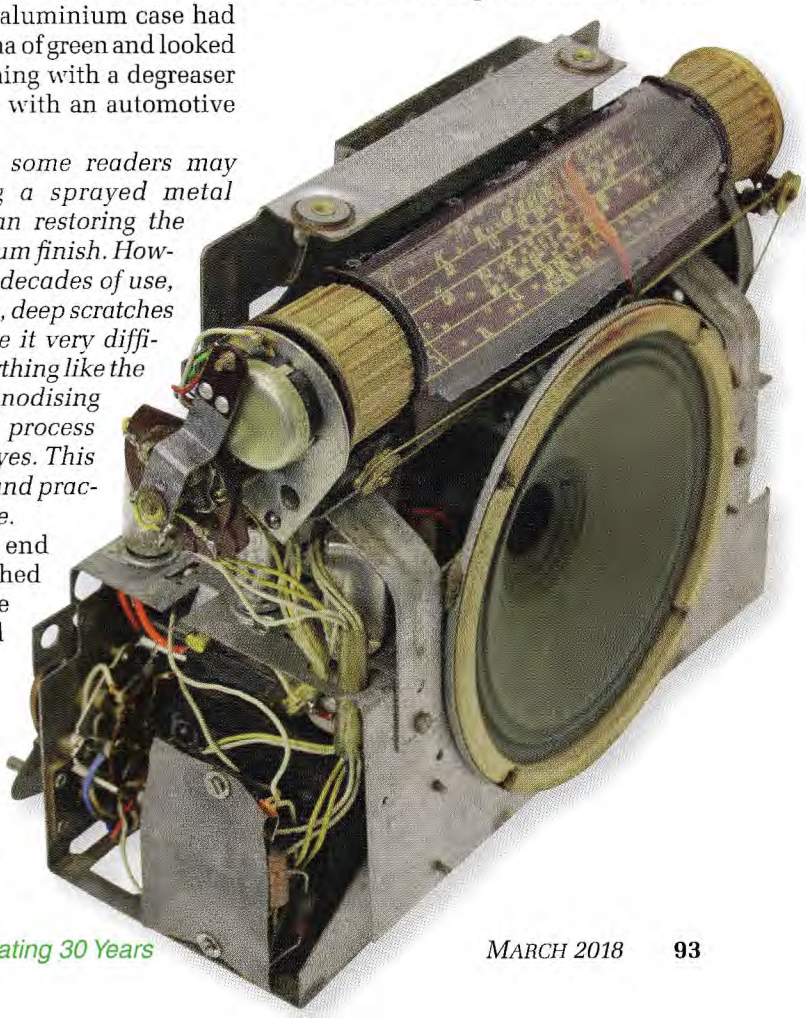

**This end view shows part of the mains on/off switch which was operated by the shutter at the front of the case.**

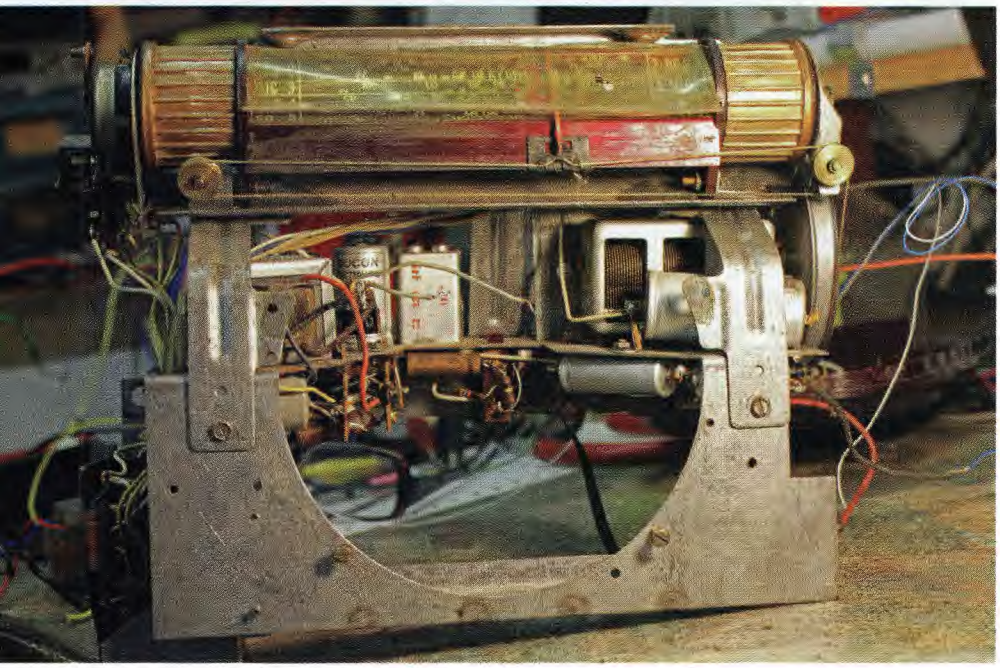

**This view shows the front of the chassis with speaker removed. Interestingly, the tuning gang has brass plates, whereas most production tuning gangs at the time used aluminium plates.**

small channels at either end of the dial and the bottom lip must be reinforced to remain straight across the span.

A new Philips logo for the centre of the speaker grille was created by using laser-printed acetate sheet glued to metal-coated card.

## Troubleshooting the circuit

The electrical restoration of this radio proved more challenging. Initially there was no sound at all from the speaker, using bench supplies to provide 9V LT and 90V HT via the battery plug (see the picture of the bench arrangement).

The 9V supply current was 50mA, indicating continuity of the heater filaments. In valve portables there is no visible glow of the filaments to indicate open-circuit heaters so current measurement is an important diagnostic tool.

But the 90V line was drawing only 3mA (whereas it should have been 10mA or more, if everything was working). For reasons that I suspect relate to operating at a relatively low voltage, portable valves have a high frequency of failure of pin connections and I routinely clean the pins before powering up.

A signal tracer at the volume control showed that detected (rectified) audio was being delivered from the 1S5. Since there was absolutely no sound from the speaker, it was detached and its voice coil checked for continuity. It was OK.

Detaching the speaker also gave access to many components otherwise inaccessible (see the picture of the front of the chassis).

The next fault possibility suggested by the low HT current was an open-circuit primary in the output transformer.

This annoyingly common fault proved to be the case. When the output transformer is open-circuit there is no HT to the anode of the 3V4 output valve so it cannot conduct current.

Then came an "Oh bother" moment because the speaker transformer nuts and bolts were buried behind other components and the upper superstructure made the transformer captive, even if the bolts were removed.

The practical solution was to add a replacement transformer to a bracket below the speaker mounting and leave the original in place.

This will prevent a standard size battery being housed in that space. However, this set has a mains power

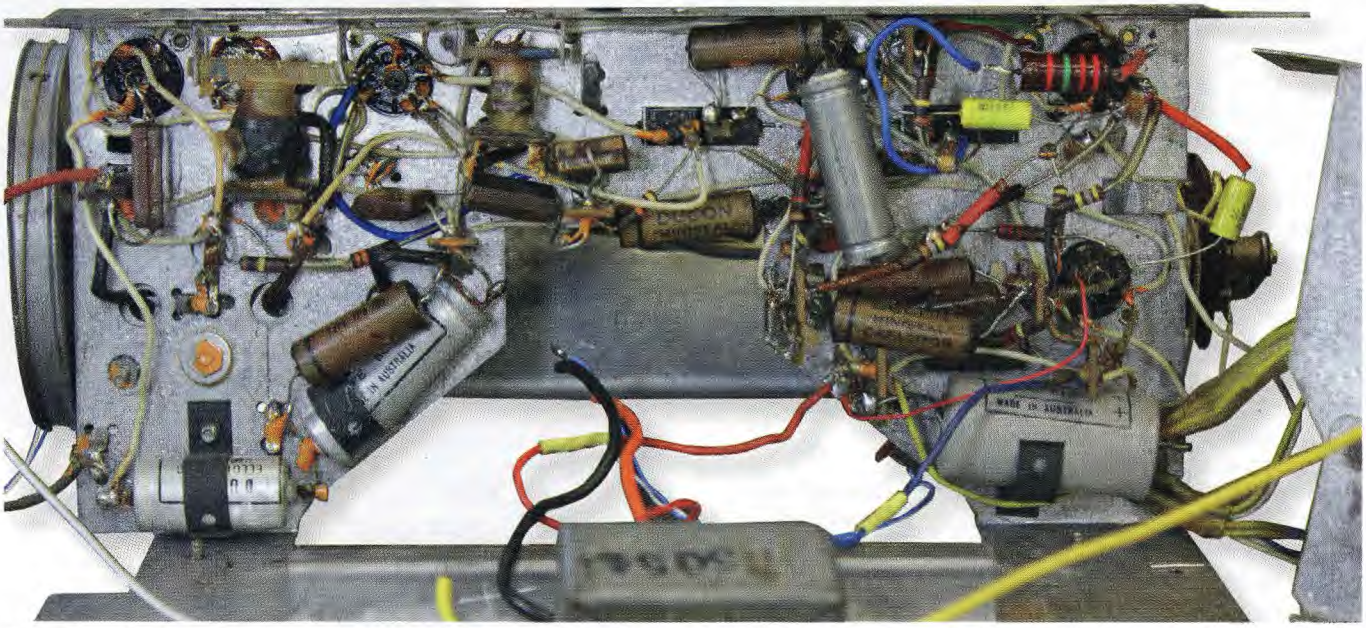

**Even though the case was manufactured from aluminium panels, the chassis was made from plated steel and in other respects the construction was entirely conventional. Surprisingly, not many of the paper capacitors needed to be replaced.**

supply, so it was a reasonable sacrifice.

But sadly the radio was still not working after replacing the output transformer. This led to measuring voltages around the 3V4 and checking whether audio was delivered to the grid.

The result was flabbergasting. A blue wire from IF transformer 2 might have provided screen voltage but it was soldered to pin 6 which is not connected. The audio feed from the 1S5 was connected to pin 3 (the screen) rather than pin 6 (the grid) that had nothing at all connected.

My first thought was that the cowboy who did this had incorrectly counted the pins anticlockwise rather than clockwise to create this mess, but that did not explain the mistakes. It was a case of that person having the wrong data for the valve and/or incomprehensible stupidity.

The picture of the components under the chassis shows the radio after the correct pin connections were sorted out for the 3V4. But even then, the radio still did not work. The feed capacitor from the 1S5 to the 3V4 (C20) was replaced but there was no audio signal passing through.

Finally, checking voltages at the 1S5 revealed the last problem. There was no screen voltage because R9 (3MΩ) had gone open-circuit. Replacing R9 was the last step to restoring normal function.

Luckily, the 1S5 still acted as a detector even when it could not function as an audio preamplifier.

After fixing the problems, the radio was run from the 230VAC mains using a proprietary plug inserted into the rear of the case. The power transformer and mains socket are awkwardly tacked on below the main chassis at the left-hand side and multiple wires lead up to the 6V4 rectifier and switching circuit mounted at the top.

Everything about the mechanical and electrical construction of this radio is challenging. However, all is well that ends well. It was gratifying to restore this radio to a good final appearance and excellent performance. **SC**

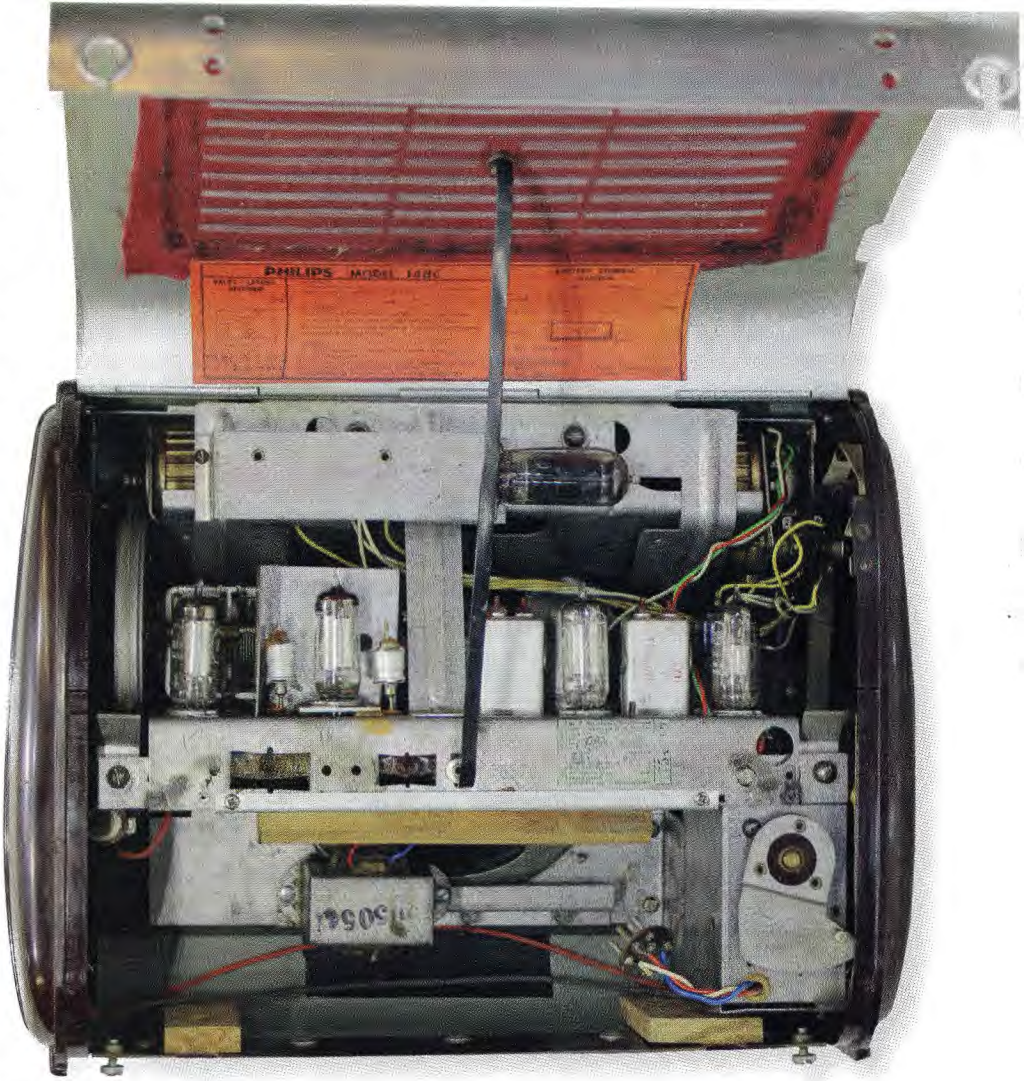


**Not all of these portables made by Philips were equipped for mains operation as can be seen by the add-on section above involving the 6V4 full-wave rectifier just below the orange label.**

**Philips sold this radio under three brand names: Philips Model 148C (as shown to the right), Fleetwood Model 1052D and Mullard Australia MABS 1052. The valve line-up was the same for each brand.**