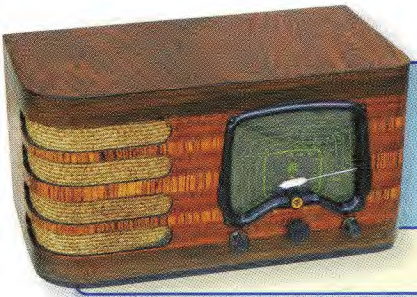

VINTAGE RADIO

By Associate Professor Graham Parslow

1958 Stromberg-Carlson Baby Grand 48A11

The Baby Grand epitomises simplicity; it is a minimalistic radio, stripped back to the bare essentials, yet still quite handsome. It is a conventional 4-valve, mains-powered MW superhet.

The name "Baby Grand" is an odd choice for such a plain radio. I suspect that someone laughed when they adopted that name.

Despite their simplicity, these radios perform as well as, if not better than, contemporary five-valve radios. Put it this way: they sound as good as is possible for a radio with a five-inch general-purpose speaker.

Few other radios have such minimalist styling. At the time this radio was designed, the Brutalist Movement in architecture was at its peak, featuring plain buildings that were functional and lacking intricate adornments – perhaps inspired by the similarly brutal military structures of WW2, which would have been fresh on the memories of the architects in the early 50s.

The Brutalist movement flourished from the 1950s through to the 1970s and is strongly linked to the architect Le Corbusier. You will probably have seen public buildings and high rises that illustrate that period of austere design. Sydney's MLC Centre in Martin Place and the UTS Tower at Broadway are good examples, as are the Victorian Arts Centre and Hamer Hall on the Yarra in Melbourne.

That might give you some idea of the radio's aesthetic inspiration.

Despite having just three RF/audio valves, the radio sounds good because the speaker is firmly screwed to the front panel, so it is better baffled than many other contemporary radios.

Design details

As the photos show, the enclosure is a simple timber box with rebated cleats into which the chassis slides.

The chassis is also minimalist in that it is a single steel sheet with two folds. This creates flanges that slide into the slots. In creating this simple chassis, Stromberg-Carlson was emulating the budget strategies of their competitors, keeping the cost low.

The tuning knob has stations marked on the side. The same scheme was used on the Stromberg-Carlson model 79TII transistor radio from 1959. On the Baby Grand, the knobs are on the side while the transistor radio has the calibrated knobs on the top. In both cases, the station markings are visible from the front of the radio.

There were four different sets of station markings used on the radio, each accommodating two Australian states. Cleverly, the knob is moulded with two flats in the spindle hole so it can slide onto the tuning shaft in either of two orientations, rotated by 180°. This allows the stations to be visible for one state or the other.

For example, with the radios shown here, the station marker stud (set into the case) indicates either Victorian stations or, in the alternative mounting position, NSW stations.

Radios from other major manufacturers at the time also commonly used

a direct drive from the tuning knob to the tuning capacitor.

However, the others used a face-mounted circular Perspex dial with a cursor that moved over stations displayed behind the knob. The Stromberg-Carlson approach has the dual advantages of needing fewer components and reserving the whole face of the radio for the speaker grille.

The two-gang tuning capacitor and the IF coils are all of conventional size. Other manufacturers, notably Philips, were starting to use smaller components in valve radios at this time. This was the dawn of commercially viable transistor radios and the need for lightweight, compact components drove miniaturisation.

The contemporary Stromberg-Carlson model 79TII transistor radio mentioned earlier used a miniature tuning gang and other lightweight components, so it weighed just 2.4kg. Even with standard components, the Baby Grand still weighs in at a relatively light 3.1kg.

This was the era of families saving to buy their first TV and so the family radio budget was not high. Before the second world war, Stromberg-Carlson made only high-end radios but afterwards, they had mixed offerings through a wide price range.

Circuit details

In 1958, valve radios had reached a peak of evolution using efficient miniature valves and associated circuitry. This radio features only one surprise for its time: the use of an OA79 germanium diode as the detector and AGC generator.

The circuit is shown in Fig.1. Reception starts with a large ferrite rod antenna. There is also a coupled external aerial winding, allowing signal strength to be increased if necessary. This is not shown on the circuit diagram but can be seen in pictures of the radio. The external aerial wire simply dangles from one of the ventilation holes in the back panel.

The mixer-oscillator in this superhet circuit is a 6BE6. The 6BE6 was registered by RCA at the end of 1945 and proved to be a reliable design. A tap on the oscillator coil is connected to the cathode of the 6BE6 to provide positive feedback and maintain stable performance of the local oscillator. This type of oscillator circuit was devised by Ralph Hartley in 1915 and is named after him.

The other 6BE6 connections are all standard, with the broadcast signal applied to the control grid and the anode feeding the 455kHz heterodyne signal to the first IF transformer. The negative control voltage for AGC is supplied to the 6BE6 grid, derived from the anode of the OA79 diode (the cathode of the diode connects to Earth).

The main circuit diagram simplifies the internal electrode arrangement of the pentagrid 6BE6. All 7 pins of this miniature valve have functional connections.

The first IF transformer feeds very simply into the grid of a 6BA6 7-pin pentode. The 6BA6 was designed to amplify RF signals and is another reliable design from RCA America, first registered in October 1945. Like the preceding stage, the negative control voltage for AGC is supplied to the 6BA6 grid from the anode of the OA79 diode.

Thanks to the OA79 germanium diode, the set does not need a diode/triode valve. It instead has a 6BM8 incorporating a triode audio preamplifier and an output pentode, combined in the same glass envelope. The circuit diagram again simplifies the electrode complement of the pentode.

The triode section has a claimed amplification factor of 70. Accordingly, this valve was commonly used in record players with crystal pickups, where high amplification was required. Valve data indicates that a 300mV input can result in 3W of audio output with the anode at 260V. Philips registered the valve in 1956 with the European designation ECL82.

Entry level guitar amplifiers were another typical application for the 6BM8.

The circuit diagram shows the pentode plate at 85V. At first glance, it might seem that the triode plate is at 270V, but that is actually the value of the plate decoupling mica capacitor of 270pF.

HT voltage of just 85V seems improbably low, but a high impedance

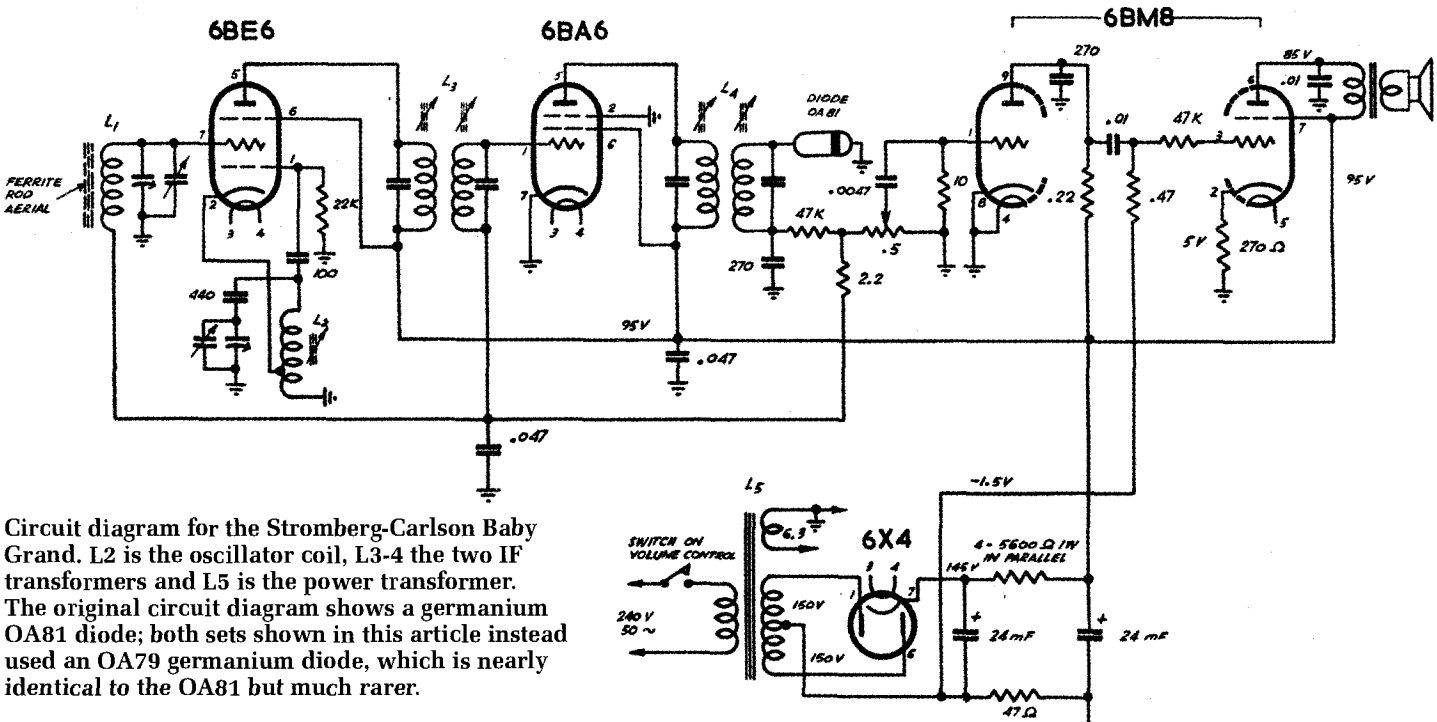

Circuit diagram for the Stromberg-Carlson Baby Grand. L2 is the oscillator coil, L3-4 the two IF transformers and L5 is the power transformer. The original circuit diagram shows a germanium OA81 diode; both sets shown in this article instead used an OA79 germanium diode, which is nearly identical to the OA81 but much rarer.

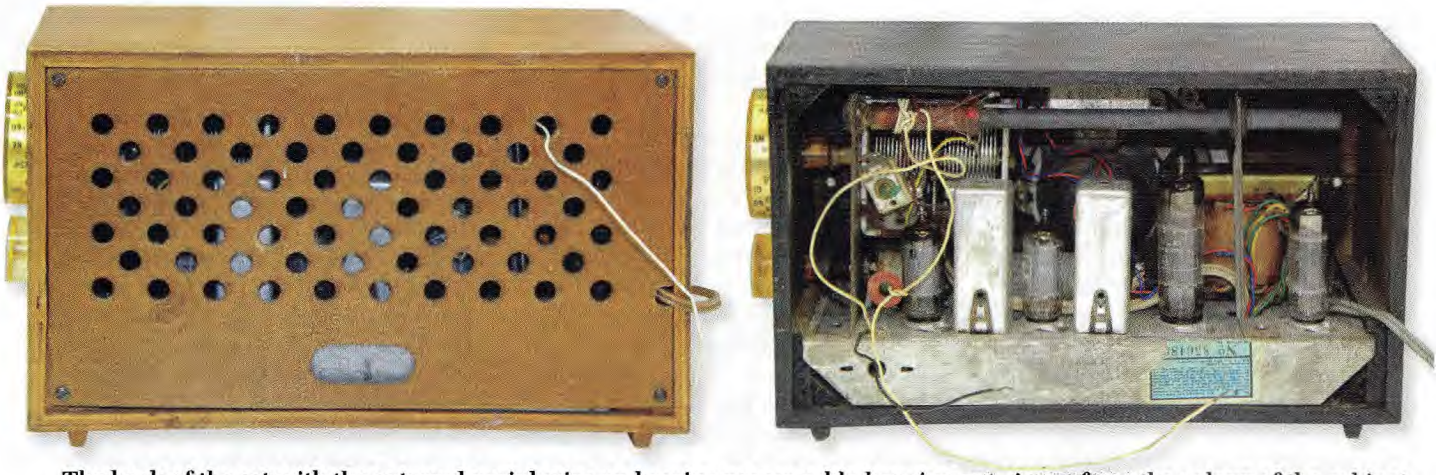

The back of the set with the external aerial wire and mains power cable hanging out. Apart from the colour of the cabinet, logo and power cable, there isn't any other difference between these two sets.

voltmeter confirmed the printed value. I measured a 140V output from the HT rectifier, 90V from second electrolytic filter capacitor, 86V at the 6BM8 pentode plate (circuit shows 85V) and 40V at the 6BM8 triode plate (after replacing the series 220kΩ resistor, as described later).

The benefit of these low high-tension values is a meagre power consumption of just 24W, while still delivering a satisfactory volume level.

Electrical restoration

This radio is among the easiest valve radios to work on because most components are mounted on a tag board with a logical layout and good accessibility. The low component count is also reflected in the chassis view from the top showing, a relatively uncluttered layout.

As shown in the photos, I purchased two of these radios, one in a black case and one in a stained timber case.

The black-case radio worked well from power up. But the timber veneer radio crackled. Even with the volume control set at zero, it still made the irritating noise, so the crackle was clearly being produced after the volume control pot. I progressively replaced the most likely components that could generate crackle.

Changing the HT filter electrolytics made no difference. A replacement 6BM8 made no difference. Shorting either grid in the 6BM8 to Earth eliminated the crackle. I could not find any dry joints, despite much prodding and pulling. I then replaced all the paper capacitors in the audio circuitry but still, there was crackle.

At least there was one useful outcome of all these replacements. The coupling capacitor to the pentode grid was leaky and upon changing it, the pentode grid bias went from -3.2V to -5.0V.

The original 220kΩ resistor to the triode plate measured high at 324kΩ but replacing it didn't solve my problem. Replacing the 10MΩ 6BM8 triode grid-to-Earth resistor also did nothing.

It was time to be more systematic. A signal tracer found no crackle at the triode grid, but crackle was audible

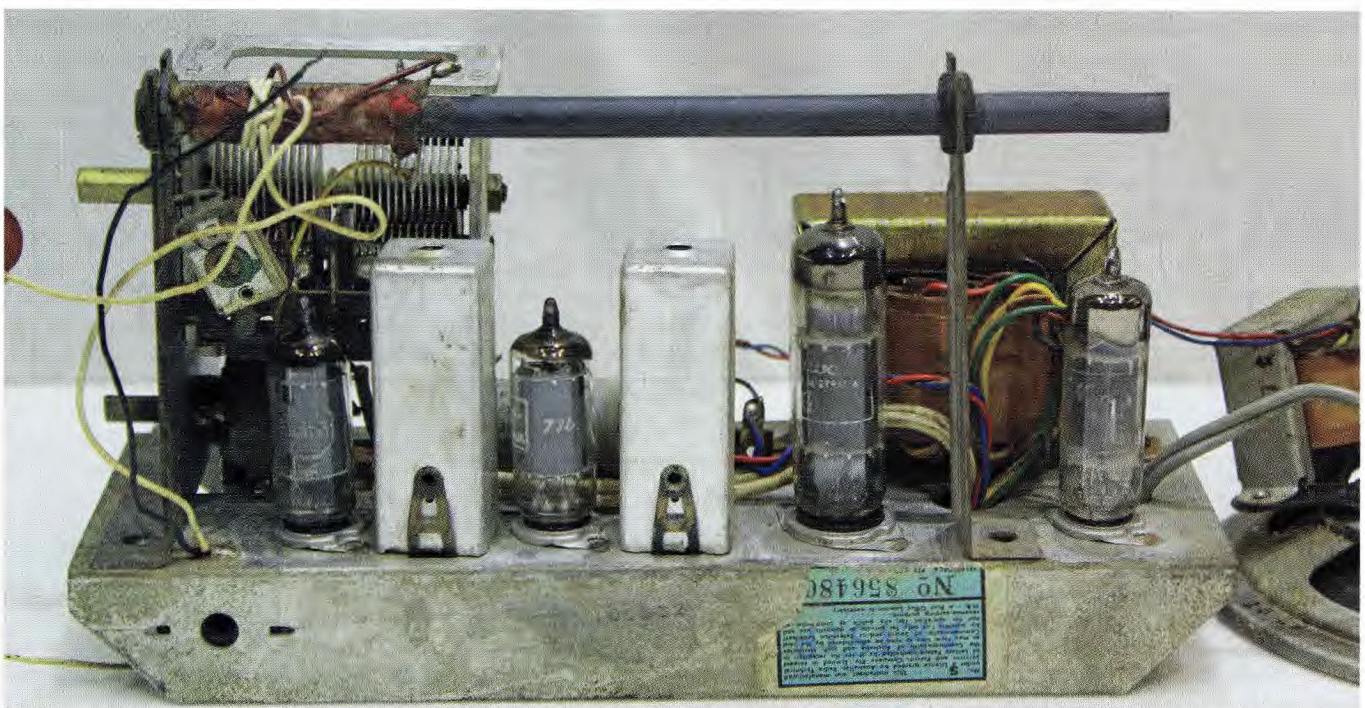

A closer view of the chassis from the rear, out of its case. From left to right, the valves are: 6BE6, 6BA6, 6BM8, 6X4.

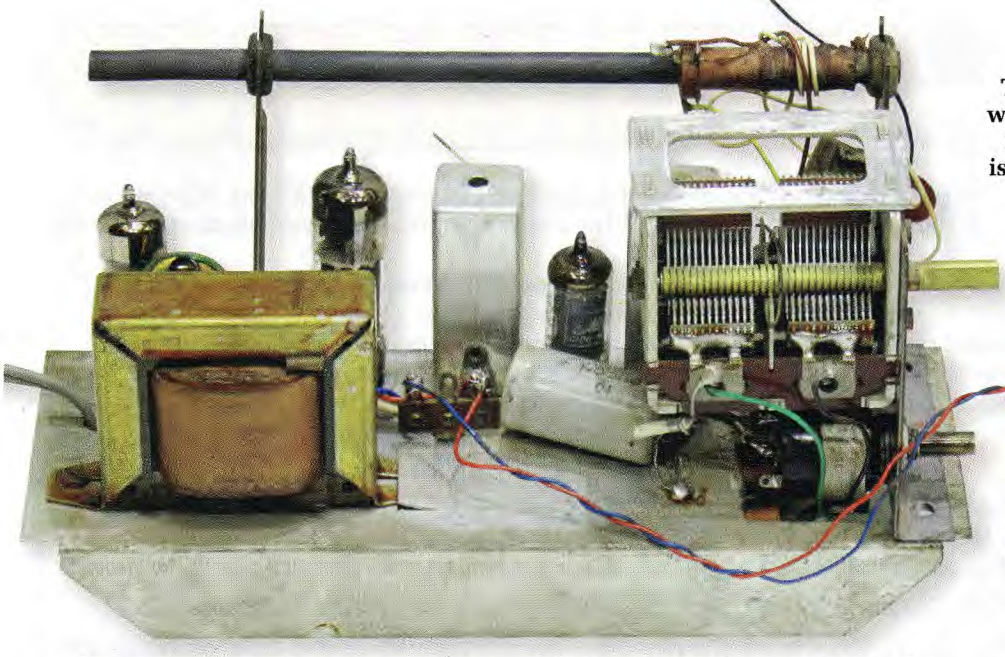

The front of the Baby Grand chassis with a Rola 5-inch 3.5Ω loudspeaker. Like other radios, the power switch is integrated with the volume control pot, visible near the bottom of the chassis.

at the triode plate. The only component that I had not replaced that connected to the triode plate (pin 9) was the 270pF mica capacitor that was designed to shunt any high-frequency signal to Earth.

Sherlock Holmes asserted that when every other explanation has been eliminated, then the only one remaining must be the truth. Indeed, Holmes proved correct. Replacing the mica capacitor to the 6BM8 triode plate killed the crackle.

In sharing this experience with others, I discovered what is now becoming ever more common in vintage radios. mica capacitors look rugged and indestructible, but they are now reaching an age where their failure leads to crackle. If you encounter a case of crackle, start by replacing the mica capacitors.

All that remained was to fire up the signal generator and slightly improve the performance by aligning the set.

The photos show the original two-core figure-8 mains leads. I replaced these with 3-core cable, Earthed to the chassis.

Case restoration

When I bought it, the black-case radio had damage on the edges of its case, exposing bare timber. The fascia is held in by plastic lugs penetrating through the woodwork of the front of the case. The black case was separated from the facia and resprayed with satin black to provide the much-improved appearance seen in the photos.

The timber veneer case was likewise abraded at the edges and so I refinished it with satin polyurethane.

A fellow member of the Historical Radio Society of Australia told me that he originally thought these Baby Grand radios were ugly, but he is now changing his mind.

Beauty is in the eye of the beholder and these radios make a statement that is alternative to other mainstream radios of the time. Sometimes less is more, as the aphorism suggests.

Sadly, these innovative sets did not save the company from other forces in play at the time. Stromberg-Carlson tried to participate in the Australian television market, but they were not competitive and all manufacture ceased in 1961. **SC**

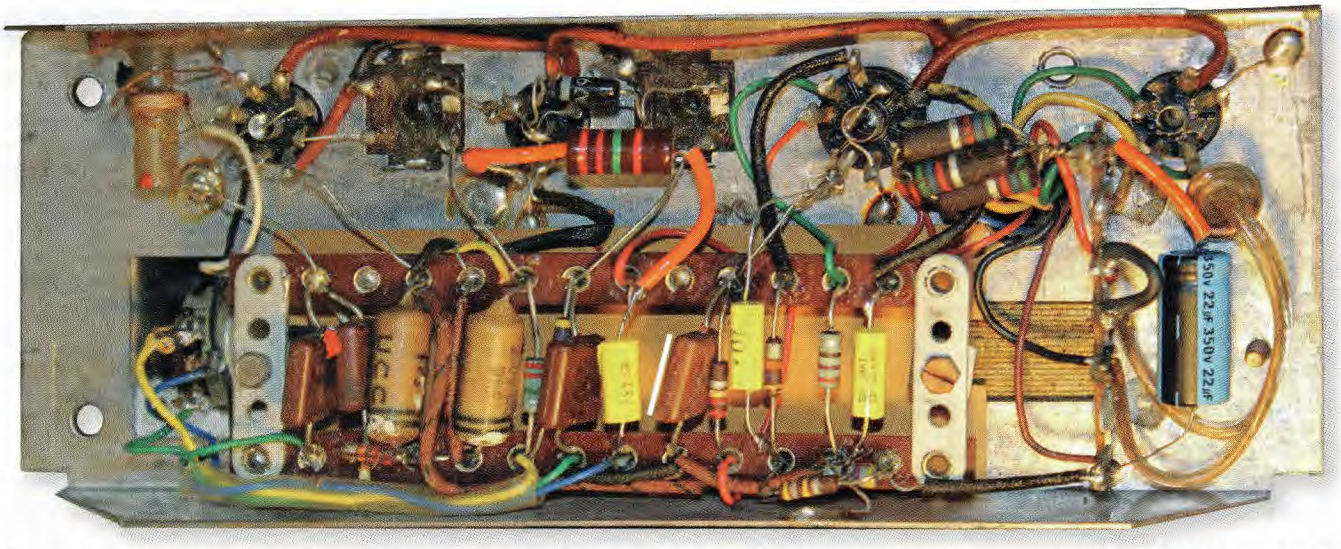

The underside of the restored chassis. The source of the crackle was due to a single mica capacitor, located between two of the replacement MKT capacitors (marked by the white line).