VINTAGE RADIO

By Rob Leplaw

AWA Radiola Model 137

the "Fisk" recreated

Rob took an old radio chassis he inherited from his grandfather, fixed it and built a cabinet for it. The style is 1930s Art Deco, but with a less ornate and much smaller cabinet than the original. He had to repair or replace quite a few of the original components, and figure out how to get it working with few circuit details to go on. The result is a new-looking radio with the style and the sound of the 30s.

I first saw this radio chassis in my grandfather's shed in the late 1960s, while I was building a modified Austin A40. I eventually inherited the radio and over the years, I would see it sitting forlornly on the shelf in my workshop and would stop to take a look at it.

One day, I sat down and traced out a rough circuit. It became evident that someone had been into it and removed some parts. However, all the valves were there, and it looked like it might be salvageable. The labels indicated that it was Australian and the reason I kept it was it looked so old with all the 2.5V filament valves.

At the time, I was doing the Radio Trades course at North Sydney Technical College, so I scanned the library looking for circuits of radios with similar valves. But could never find an exact match.

Some years later, I had another burst of enthusiasm, as I noticed that the chassis was showing signs of decay from its years in a dusty shed. I then decided to strip the chassis carefully, remove the rust and paint it. Several years passed and now and then, I would again look at the radio and think I should find time to repair it. With that thought in mind, I usually just gave it a dusting and put it back in the plastic bag which had become its home.

Finally, in 2016 I got serious. If I was going to get it working again, I had to nut out its circuit. But most of the large capacitors were inside metal containers, so I couldn't tell their value. I decided to open the containers and try to measure the individual capacitors. This involved using heat to melt the lid off and also to melt the wax inside, which held the capacitors in place.

A couple of the capacitors inside had markings but most didn't. I tried measuring them but they were all expired. Anyway, I had the basic circuit and of course, now we have the internet, so I started searching to see if I could find a circuit for a radio with the same valve line-up.

After much searching, I found details on the HRSA website of an AWA chassis that used precisely the same valves but no circuit diagram was available. It was the AWA Radiola Model 137 (1934).

I then found Kevin Chant's website and emailed him to see if he could help, but he turned up a blank.

While searching the web, I found circuit diagrams for AWA models 136 and 139, made just before and after my unit. Comparing the Radiola 136 circuit to my chassis, I could see it was a very similar design. However, mine

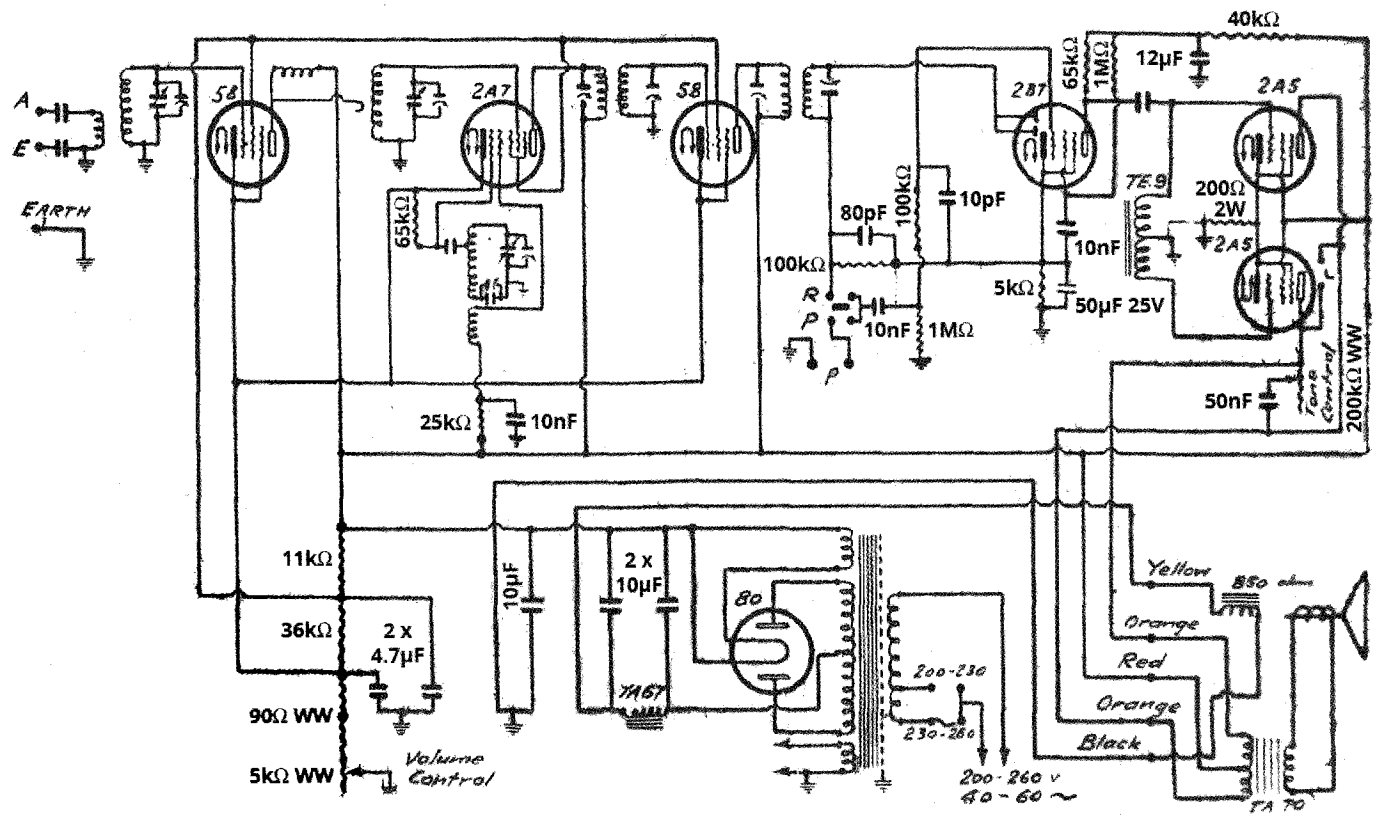

The AWA Model 137 is a mains powered radio with a 175KHz IF, an adjustable supply voltage of 200-260V AC and a safety fuse incorporated to protect against overload. The 36kΩ resistor near the volume control is a best guess value and not the actual value. A few of the components in the circuit haven't been labelled as their values are unknown.

has a push-pull output stage based on two 2A5 valves while the 136 used a single 2A5 in Class-A.

Finally, I decided to contact the HRSA and ask if they had a circuit for the 137. They did but it had no component values listed. I ordered a copy anyway and when it arrived, it was apparent that it matched my chassis. That circuit is shown here.

In my original circuit tracing, I had somehow transposed the RF input coil and the mixer coil, but apart from that, it very similar. The HRSA circuit showed that the output stage was driven by a centre-tapped transformer (missing from my chassis) and after discussions with HRSA members, I was advised about a suitable type of transformer to use.

I found the ideal period transformer on the internet and also an output transformer, as it was missing from my chassis.

Circuit description

This was a high-end set for its day, using seven valves; two type 58 pentodes, a 2A7 pentagrid, 2B7 double-diode pentode, two 2A5 pentodes and a type 80 (short for UX280) full-wave rectifier. The first type 58 is used as an RF amplifier stage, which feeds the 2A7 mixer/oscillator. From there, the signal goes to an IF amplifier stage based on the second type 58, then onto a dual diode/pentode (2B7) for detection and audio amplification.

The amplified, demodulated signal drives one of the 2A5 pentode output valves directly, as well as a phase-splitter transformer (labelled TE.9), which controls the other 2A5, so that they drive the centre-tapped primary winding of the output transformer in push-pull mode.

The type 80 full-wave (dual diode) rectifier is used to derive the HT voltage. This is filtered first by a pi filter involving an iron-cored choke (inductor), TA67, then further filtered using the electromagnetic speaker's 850Ω field coil. Thus the field coil gets its magnetising current from the HT while also providing the second inductor in the filter. This was standard practice in the days before permanent magnet speakers.

Note that the HT filter chokes are on the negative side. The positive HT rail voltage comes straight from the cathode of the type 80 rectifier valve, while HT ground first passes through the filter inductors (bypassed by three capacitors) before reaching the mains transformer.

Coupling from the RF amplification stage output (the anode of the first type 58 valve) and the tuned inductor circuit feeding the control grid of the mixer/oscillator is via air coupling, hence the strange 'hook-like' symbol seen between the two valves.

This is something you occasionally see in vintage radios. The output of the RF amplifier is strong enough to directly couple into the mixer circuit.

The volume control in this set may seem unusual, but it was common in earlier designs. The 5kΩ WW pot is in series with the common 90Ω cathode resistor for the RF amplifier, converter and IF amplifier. Their control grids are all DC biased to ground.

With the volume control at minimum resistance (maximum volume), a small amount of bias is created by the combined cathode currents flowing through the 90Ω resistor. As the volume pot is turned, its resistance rises, increasing bias to the three valves. This reduces gain, and thus volume. The volume control also adjusts the common screen bias voltage, via the 36kΩ/11kΩ voltage divider, although this has minimal effect on operation.

This would have been necessary since the set lacks AGC on the front end – there is no feedback path from

The underside of the chassis is quite neat. The silver cans marked 1-4 contain the coupling transformers, while the two copper boxes on the underside and top (left of the dial) of the chassis contain electrolytic capacitors.

the detector back to earlier stages. So the front-end gain had to be adjustable to avoid saturation on strong local stations.

The set also has a phono input socket and switch. The phono input is marked "P" and the switch marked "R" and "P", below and to the left of the 2B7 detector/audio preamplifier. In the "R" position, the signal from the demodulator is fed to the control grid of the 2B7 pentode, while in the "P" position, the demodulator is disconnected and the phono signal is fed in instead.

The demodulator has a 100kΩ load resistor to the 2B7's cathode and 82pF filter capacitor to remove the IF modulation. The 2B7's cathode resistor is bypassed with a 50µF capacitor to maximise gain. The audio signal from the R/P switch is further filtered by a 100kΩ/10pF RC low-pass filter, presumably to remove any remaining RF.

The radio also has a tone control pot. One end of its track connects to plate of one of the 2A5s (ie, one end of the speaker transformer primary) while its wiper is connected, via a 50nF coupling capacitor, to the anode of the other 2A5 and thus the opposite end of the speaker transformer.

So it seems that the tone control selectively shunts some of the amplified audio signals which would otherwise appear across the speaker. While this is an inefficient way to provide tone control, it was likely done to save on component count.

There is also a connector for an external loudspeaker, marked "L", shown just to the right of the 2A5s. It connects directly to the anodes of both 2A5s. One would hope that this terminal is well-insulated, given the high voltage which could appear across those two terminals.

Chassis restoration

After going over my chassis several times and comparing my components with those listed on the 136 circuit, I also discovered a few components had been removed from my chassis. I replaced all the unknown capacitors with values from the 136 or my best guess, and also changed a couple of resistors that measured a much higher resistance than expected.

The only big guess was the value of one resistor in the voltage divider that provides screen and biasing supplies to the RF & IF amplifiers and converter. The resistor in my chassis was open-circuit, and the colour code had flaked off.

The value in the Model 136 circuit seemed too low and didn't agree with the remaining paint on my resistor, so I guessed it was 36kΩ. It could have originally been 16kΩ but it works with 36kΩ, so I stuck with it.

Having replaced the missing components, it was time to power it up. First, I removed all the valves, so I could check the HT without them. I plugged the chassis in and switched on the power. Everything seemed to work OK, with the HT settling at 350V DC. This seemed a bit high, as all the valves list 250V as their plate voltage.

I worked out what the total current drain of the valves would be and calculated the expected voltage drop across the speaker field coil, and it looked like I would still have about 300V on the plates if I didn't make any changes.

So I added an extra load resistor across the HT supply to bring it down to 250V, just to be safe. I plugged in all the valves and switched it back on, monitoring the HT rail, and it settled down to 250V, as expected.

I fed an audio signal into the grid of the 2B7 audio preamp and got audio from the speaker. This was good but when I injected RF into the aerial input, I couldn't get anything from the speaker. The mixer was oscillating correctly and if I fed a signal into the mixer grid, I got an audio output.

After much head scratching, I decided to remove the inductor load on the RF amplifier's anode. As I pulled it out, I found that it had been shorted out with a piece wire wrapped around the back. That certainly explained the lack of output!

On closer examination, I found that the leads had broken off the load coil. I guess that is why it had been shorted

out, but that was a crude and not very effective repair attempt.

I managed to recover the wires at either end and repair the coil properly. With the working coil reinstalled, the radio sprang into life. I removed the additional load from the HT rail and it settled down to about 280V DC, and everything seemed fine.

But all the time spent in the old shed had done the speaker no good. The cone was utterly gone. I contemplated keeping the speaker field coil and fitting a modern permanent magnet speaker, but decided it would be better if I could repair the original, so I ordered a rubber surround on eBay that looked the right size.

When it came, I glued it in place and then made a new paper cone out of some construction paper. I carefully removed the remains of the old cone, being careful not to damage the voice coil wires, which I left surrounded by a small section of the old cone.

After adjusting and trimming the new cone to the right size. I glued it to the rubber surround and the voice coil diaphragm. I then connected the voice coil and the bucking coil to the new output transformer and reassembled the speaker. Back in the radio, it all worked perfectly!

As the chassis was found in a shed, the cabinet had apparently been discarded long ago. I had a picture of the original AWA cabinet (shown here); a huge piece of furniture. I was not keen to recreate that. So I browsed the internet, looking at pictures of vintage radios and eventually decided that I would build a tombstone style cabinet for it, with a rounded top.

The result would be a smaller, more practical and (in my opinion) more attractive package.

My original idea was to make a basic, plain face with the speaker at the top and I started construction with this in mind, making the cabinet as small as possible while still able to fit the chassis. Some way into the build, I saw an old Philips radio with a similar shape but a much more elaborate face and decided to style mine after it.

The base is made from recycled Australian cedar, as are the vertical pieces on either side, while the main part of the face is veneered in teak. The top arch is stained plywood. The badge in the middle of the speaker is a replica AWA Fisk Radiola.

I cut and shaped brass into a rounded rectangular shape for the dial feature. I had "Model 137" engraved under the dial opening. On the rear, I fastened an AWA employee badge that I found in a box of old badges.

Finally, it was finished, 48 years after I first laid eyes on it. When tuned to ABC RN and with music playing, it sounds very satisfying. SC

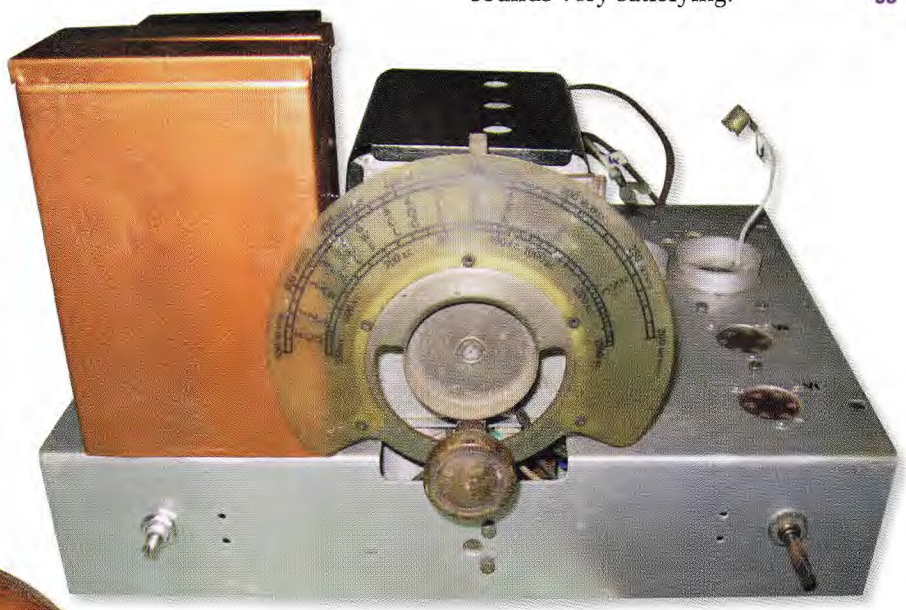

▲ **The stations listed on the dial are, from left to right: 2CO, 7ZL, 3AR, 5CK, 4FC, 6WF, 5CL, 4QG, 3LO, 2BL, 4RK and 2NC. The only callsign still in use is 2BL.**

◀ **The new case is custom-built in an Art Deco style, and is much smaller than the original console cabinet (shown at right). The rear of the new case was affixed with an old AWA employee badge and a replica logo was made for the front.**