VCR

SERVICING & TROUBLESHOOTING

V. APPAKUTTY

VCR

SERVICING & TROUBLESHOOTING

V. APPAKUTTY

M.Sc., B.G.L., I.B.S.,

Director, Doordarshan, MADRAS

BPB PUBLICATIONS

B-14, CONNAUGHT PLACE, NEW DELHI–110001

FIRST EDITION - 1993

Distributors:

BPB BOOK CENTRE
376, Old Lajpat Rai Market, DELHI-110006

BUSINESS PROMOTION BUREAU
8/1, Ritchie Street, Mount Road, MADRAS-600002

BUSINESS PROMOTION BUREAU
4-3-268-C, Giriraj Lane, Bank Street, HYDERABAD-500195

COMPUTER BOOK CENTRE
12, Shrungar Complex, M. G. Road, BANGALORE-560001

COMPUTER BOOK CENTRE
SCF No.-65, Sector-6, PANCHKULA-134109, CHANDIGARH

NOTICE

Published by Manish Jain for BPB Publications, B-14, Connaught Place, New Delhi and Printed by him at Pressworks, Delhi.

FOREWORD

This book on VCR Servicing & Troubleshooting has been written by Shri V. Appakutty, a well known author of books on subjects of interest to video enthusiasts in a splendid manner. This book is easily readable and understandable by any one who has got interest in electronics.

The VHS VCRs have flooded the Indian market and even Indian companies have started manufacturing VHS VCRs. In this book, the chapter on Troubleshooting will be of immense use to the servicing technicians. The effort of Shri V. Appakutty is commendable.

I wish he brings out many more books for the benefit of video users.

(K.C.C. Raja)
M.Sc.; C.Eng.; F.I.E.; F.I.E.T.E.;
F.B.S.; A.M.I.E.R.E.

Engineer in chief
Doordarshan
New Delhi

PREFACE

In all developing countries, VCR has become a house-hold article. With the expansion of television network in our country as well as in other developing countries, VCR has become a tool in Entertainment, Education and Scientific research. Both VHS and Betacam recorders are available in the market. However, in our country, for domestic use VHS VCRs have become popular.

This book is essentially meant for servicing technicians and persons who are interested in knowing the troubleshooting of VCR. Though this book contains circuit descriptions about a particular type, anyone who is reading this book will be able to understand the anatomy of the VHS VCR of any make and will be able to service them with confidence.

Persons who have knowledge of the basic VCR operation can straightaway see the chapters on electrical adjustments, mechanical adjustments and troubleshooting.

In my endeavour to bring out this book, I owe my sincere thanks to all my well-wishers, particularly to Shri K.C.C. Raja, who has been kind enough to give a foreword to this book. I also thank S/Shri. Nair, K.P. Ramaswamy, H.M. Joshi, K.V. Bhima Rao, A.V. Swaminathan, R. Seshayya, K.M. Paul, P.S. Sundaram, N.S. Ganesan, T. Rajendran, V. Alagu Murugesan, M.V. Rajendran and V. Baskar for their encouragement and help.

I also thank my publisher viz. BPB Publications, New Delhi for bringing out this book in a very attractive format.

My sincere thanks are also due to Shri Arunachalam, Hon'ble Minister of State for Industries, Govt. of India, Dr. R. Arokiaswamy, Prof. of Electrical Engg., IIT, Delhi and Shri C. Krishnaswamy. Last but not the least, I owe thanks to my wife Mrs. Chellathai, my son Rajagopal and my daughter Subhashini for all their enthusiasm, encouragement and sustained help.

10th June 1993 **V. APPAKUTTY**

CONTENTS

1

A PROFILE

Video Cassette Recorder is one of the modern electronic gadgets developed after extensive research in the field of electronics in the second half of the twentieth century. Today VCR has become a household article because it offers facility for entertainment and education.

What is VCR ? Is it different from VTR ?

VTR is in use since 1955 in TV studios to record as well as playback programmes. Like audio recorders, in VTR also, recording is done on magnetic tapes but with a difference. In audio tape recorder, only audio is being recorded whereas in VTR, both audio and video signals are recorded simultaneously.

From early 1950s, TOSHIBA in Japan and AMPEX in U.S.A. started their work for the development of VTRs. Toshiba was developing what is now called "Helical Scan System" for recording Video programmes on magnetic tapes. On the other hand, Ampex was developing what is called the "Quad Head Transverse System". But both these companies used only open reel type magnetic tapes.

Initially, recording was done on 2" magnetic tape. But in 1964, one inch magnetic tape and 1/2" magnetic tape were developed.

Sony Corporation of America introduced the first colour cassette video tape recorder (VCTR) in April 1969 and then another recorder in November 1969. These recorders were based on "U-matic Recording System."

But in these VTRs, certain limitations were observed and they are:

(1) The record and playback time was not longer.
(2) The facility to record programmes off the air was not available.
(3) These VTRs were neither portable nor compact.

This led to the development of VCRs in early 1970s.

TYPES OF VCRs

Two types of VCRs were developed simultaneously in Japan. They are:

(1) BETA (Betamax)
(2) VHS (Video Home System)

The SONY Corporation of Japan in 1975 announced the development of their Betamax VCR which used 'Azimuth Recording'. Meanwhile Matsushita of Japan introduced a VCR with a single head, whereas Toshiba and Sanyo introduced their VCRs with three heads.

But in the autumn of 1976, JVC (Victor Company of Japan) introduced its VHS VCR with two heads and this VCR had 2 hour record/playback facility as well as 4 hour capability on extended mode. Now the rivalry between Betamax and VHS manufacturers started to capture the world market.

Betamax system was used by Sony, Sanyo, Zenith and the VHS system is adopted by JVC, Hitachi, Magnavox, Mitsubishi, National Panasonic, Quasar, RCA and Technicolor. These two systems are not compatible even though they are similar in operation and identical in overall performance. The Video cassette of VHS and Beta are not Physically interchangeable. A cassette tape recorded on VHS method cannot be played back in Beta recorder and vice versa, because the recording techniques are different.

In TV, there are three different standards viz. PAL, NTSC & SECAM and each country is adopting either of these standards. So the VCR is also made to work in these different standards.

In India PAL system is being used for TV and hence the VCR must be capable of operating in PAL system. Again out of the two systems, VHS is popular in India. Also in countries like Srilanka, Bangladesh, Nepal, Burma, Pakistan, Singapore and Arab countries, VHS system is popular. Hence, the discussion in this book is of VHS type, particularly National VCR. However, since the principles of other VHS VCRs are same, it is easy to understand any VCR based on the discussion here. The basic aspects of VHS VCRs are:

(1) All VCRs use narrow-gap, high performance magnetic heads for recording and playback functions.

(2) The relative speed of tape with respect to the magnetic head is very high; for this, rotating heads are used and the tape is moving in a slanting angle.
(3) Luminance signal is recorded by frequency modulation technique whereas the chroma signal is an amplitude modulated signal.
(4) Colour-under system is employed to keep the colour signal frequency well below the luminance frequency.
(5) Servo control system is employed to keep the recorded and playback signals in synchronisation.
(6) Azimuth recording is used to avoid cross-talk between adjacent tracks.

2

VIDEO RECORDING

The technique of video recording adopted in VCR is quite different that of audio recording, though the basic principle of video recording is the same as that of audio recording.

2.1 BASIC PRINCIPLE OF MAGNETIC RECORDING

When an iron bar is placed near a magnet, it gets magnetised. That is, the end of the iron bar next to the magnet's south pole becomes the north pole of the bar; similarly the magnet's north pole induces a south pole in the other end of the iron bar. So when a magnet is moved along a larger iron bar, then the bar is magnetised with alternating North-South-North- South poles. This principle of magnetic recording is used in VCR.

In VCR, video cassette tape takes the place of iron bar and the recording heads take the place of magnet.

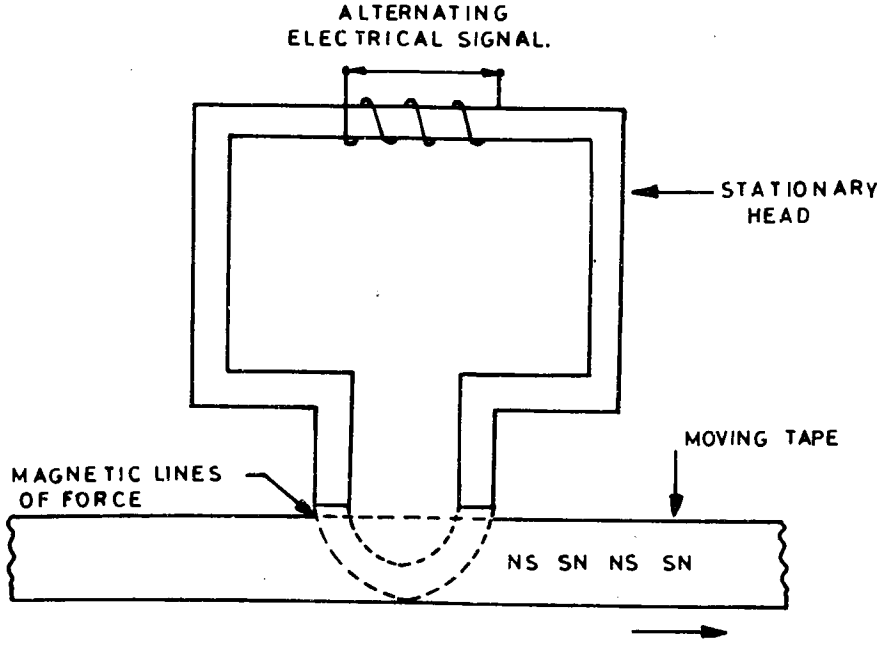

Fig. 2.1

When the tape is moved very close to a stationary head to which an ac signal is fed, then a residual magnetism corresponding to that signal is induced in the tape. The strength of the magnetism varies with the strength of the current of the signal. So depending upon the signal, the residual magnetism is induced in the tape. The wavelength of the recorded signal along the tape corresponds to one cycle of the input signal.

However, the wavelength of the magnetised signal pattern on the tape has a wavelength that is proportional to the tape speed and inversely proportional to the recorded signal frequency i.e.,

$$\text{Wavelength} = \frac{\text{Tape Speed}}{\text{Input signal frequency}}$$

2.2 PROBLEMS IN VIDEO RECORDING

In audio tape recorder, the frequencies from 50 Hz. to 10 KHz. are recorded while in VCR, frequencies from 50 to 5.5. MHz. are recorded, that means , very high frequencies present in video signal need to be recorded. So the video head used in VCR must be far superior in quality in the sense that it is able to record high frequency signals without loss.

For this, the gap of the magnetic head must be as small as possible, since the gap of the head is equal to the half- wavelength of the video signal.

The gap of the video head is given by

$$g = \frac{\lambda}{2} = (\text{wavelength of signal}) \frac{\lambda}{2}$$

The wavelength of the signal is given by

$$= v / f = (\text{tape speed[cm/sec]}) / (\text{input signal freq. [Hz]})$$

$$\text{So, } g = \frac{\lambda}{2} = v \frac{\lambda}{2f}$$

$$\text{i.e. Gap of video head} = \frac{\text{Tape Speed in Cm/Sec.}}{2 \text{ X Input Signal Freq. in Hz.}}$$

From the above, it is clear that the gap of the video head should be very small i.e., in the order of 0.3 microns to 0.5 microns in order to record the highest video frequency signal.

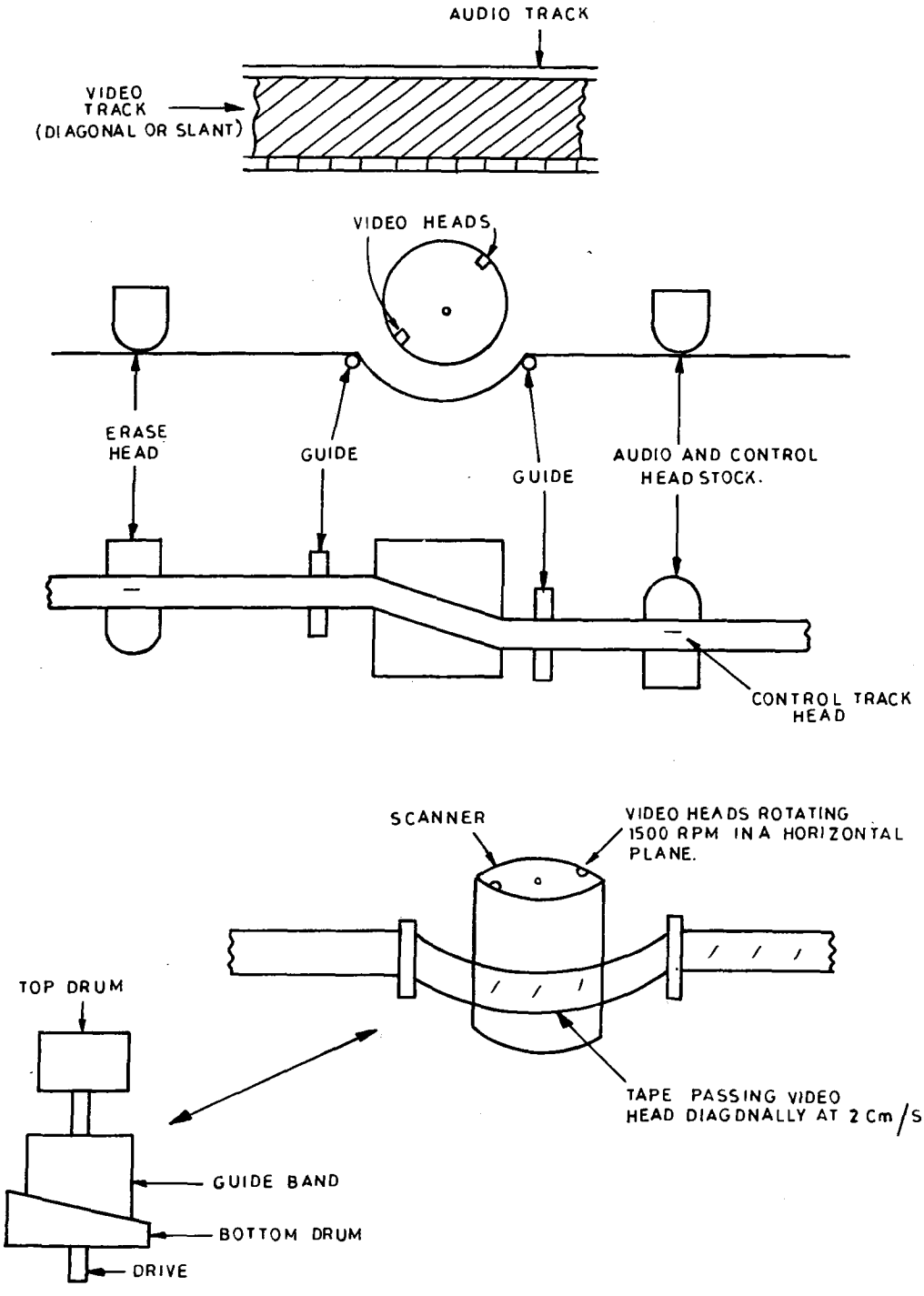

Fig. 2.2. Relationship of heads and tape movement

In Audio tape recorder the heads are stationary and the tape runs horizontally at the speed of 19 cm/sec. for good quality sound recording. The highest frequency in Hi-fi audio recording is 20 KHz. whereas in video it is 5.5 MHz., that is, 275 times (5.5 MHz. / 20 KHz.) higher. Hence the tape-length required is 5225 cm/sec (19 X 275), that means, 188.1 Km. per hour - three fourth distance of Madras to Bangalore. What a fantastic requirement of tape!

This situation suggests that the audio recording technique cannot be used for video recording.

2.3 ROTATING VIDEO HEADS

The technique adopted for video recording was rotating video heads. In this technique, the relative speed of tape with respect to video head is very high, as the video heads rotate at a speed of 25 revolutions/sec. in a horizontal plane while the tape moves diagonally at a speed of 2 cm/sec. This is known as helical scan system. In this system, diagonal tracks or slant tracks are produced.

Here two video heads are fitted 180 degrees apart in a cylinder (called as scanner) which rotates at a speed of 1500 rpm (25 revolutions per sec). Hence each head comes in contact with the tape in 1/50 sec. and therefore one diagonal track is recorded at 1/50 sec. If the head 'A' records during the first 1/50 sec, head 'B' records during the next 1/50 sec. Therefore the recording continues in the pattern of A-B-A-B and so on.

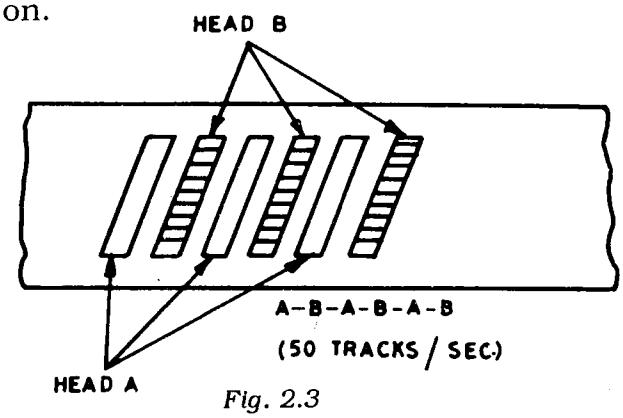

Fig. 2.3

In television broadcast, one frame consists of two fields and each field is scanned at 1/50 sec. Hence, theoretically we can presume that one field of the video signal is recorded in one diagonal track of the tape and hence two fields are recorded side by side in adjacent diagonal tracks, say A & B. But in actual practice, there is always some overlap between the two tracks, in the sense that the video signal recorded by

head A is simultaneously applied to head B just before the recording at A is over and just before the recording at B starts. At the time of playback, this overlap is eliminated in order to avoid flickering during retrace by electronic switching. As a result, the output from the two video heads appears as a continuous signal.

2.4 TECHNIQUE OF VIDEO RECORDING IN VCR

In television broadcast, the composite video signal is A.M. modulated with luminance signal (Y) at 5.5 MHz. and chroma signal (C signal) at 4.43 MHz. (colour sub-carrier). In VCR, the entire composite signal is processed in such a way that Y signal is separated from C signal. The Y signal is F.M. modulated for recording whereas the C-signal is down-converted from 4.43 MHz. to 627 KHz. and recorded directly as AM signal but not as FM signal. In fact C SIGNAL ACTS AS A BIAS FOR Y signal for recording. This technique is known as colour-under system since the colour frequency is always well below luminance signal. In this system, good stability is also achieved.

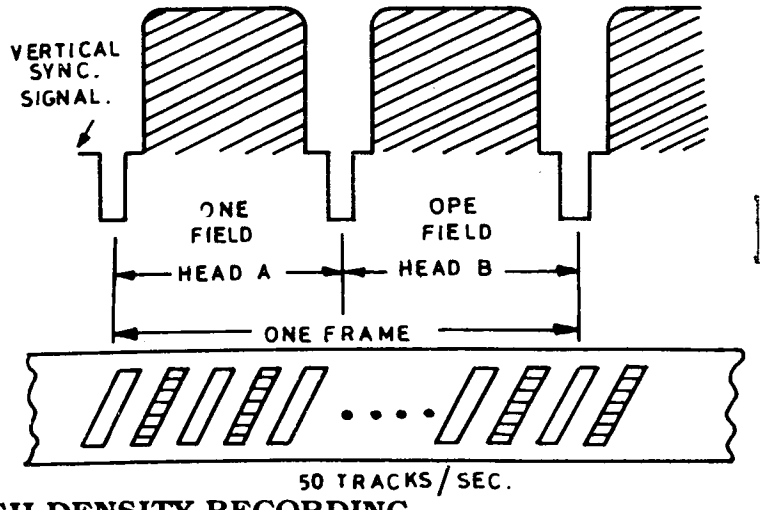

FIG. 2.4

2.5 HIGH DENSITY RECORDING

Modern VCRs employ high density recording. This became possible by (i) reducing scanner size so as to shorten the length of the tape and also (ii) by reducing the track width. In the professional VTR, there exists a guardband between adjacent tracks, but in the present day VCR, this guardband is eliminated, in the sense that zero guardband recording has been adopted. In this zero guardband recording, there is a possibility for crosstalk between adjacent tracks if proper care is not taken to eliminate it. Cross talk is avoided by adopting (1) AZIMUTH Recording and (2) Phase Inversion Colour Recording.

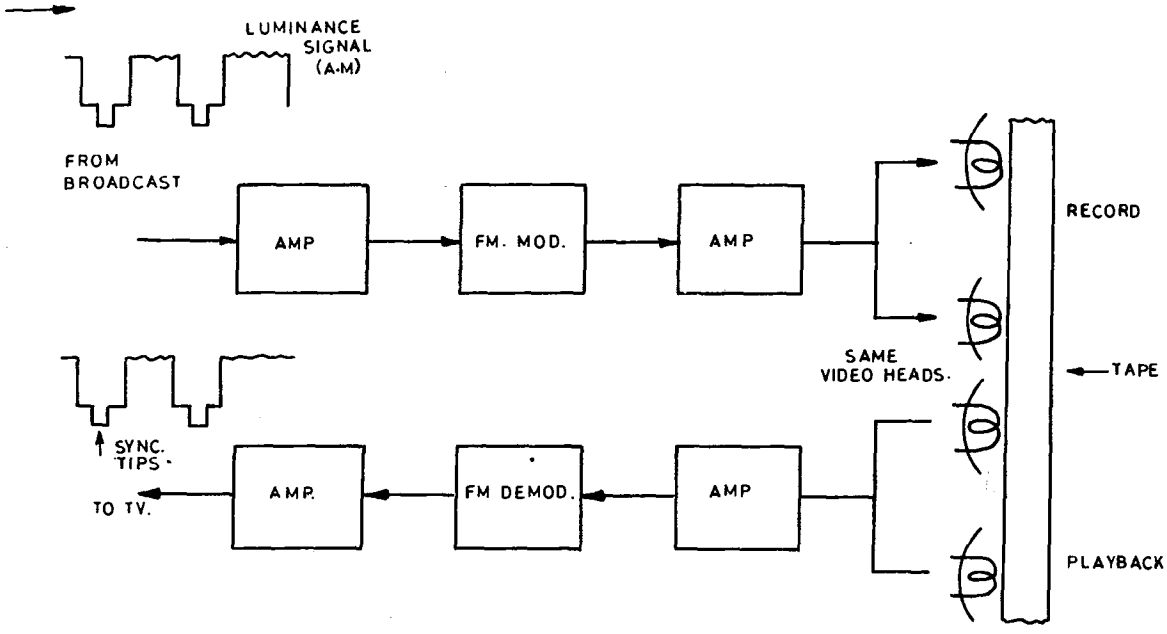

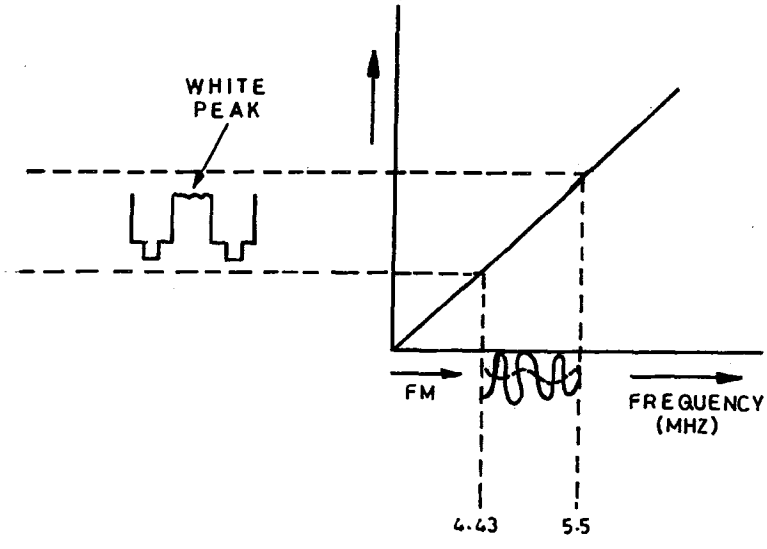

Fig. 2.5. Typical sequence in recording and play back of the luminance signal on a 'VCR'

2.6 - AZIMUTH RECORDING

If the head gap is at right angles to the tape motion, maximum signal is recorded on the tape. If there is a difference of angles of head with respect to the direction of tape-motion, then considerable High Frequency loss, known as Azimuth Loss, occurs between Record and Play. If the same VCR is used for Record as well as Play, then the error may not be noticed much. But the quality will suffer when the tape recorded on one machine is played on another machine. Any deviation from the correct alignment of angle of head is called as Azimuth Error.

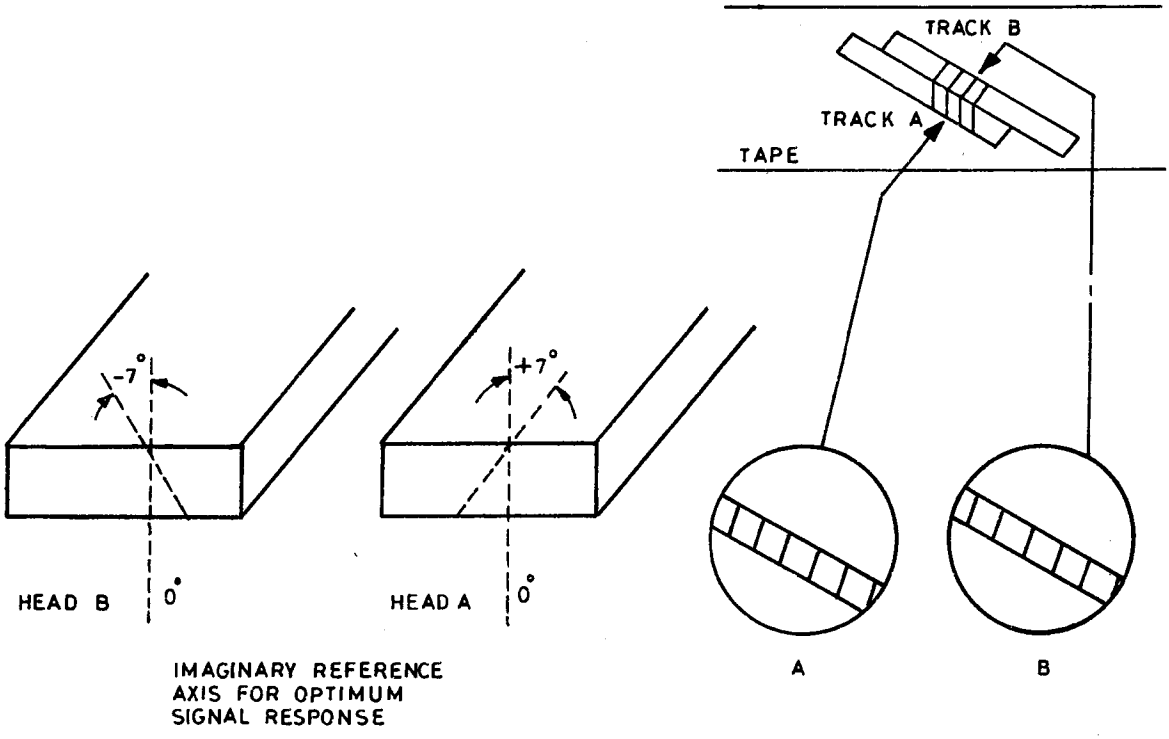

Fig. 2.6

This principle of azimuth-loss is conveniently used in VCRs to eliminate cross-talk between adjacent tracks. The two video heads are fixed on the scanner in such a way that one head is at +7° from the reference point while the other head is at —7° from the reference line. In this situation the difference between two video heads are 14x. So during playback, when the head A moves over track A, the strong signal of track A is only picked up by head A rejecting the weak signal

of track B or vice-versa. If by any reason, the head A moves over track B, even then the High Frequency signal recorded at track B will not produce any appreciable interference or cross-talk.

2.7 - PHASE INVERSION COLOUR RECORDING

The colour signal recording technique is different in different formats of recording. In VHS system, the technique is totally different from Betamax VCR system.

The 4.43MHz chroma signal either from TV broadcast or from video camera is mixed with the VCR oscillator frequency and is down-converted, to 627 KHz. The phase of this 627 KHz signal is being

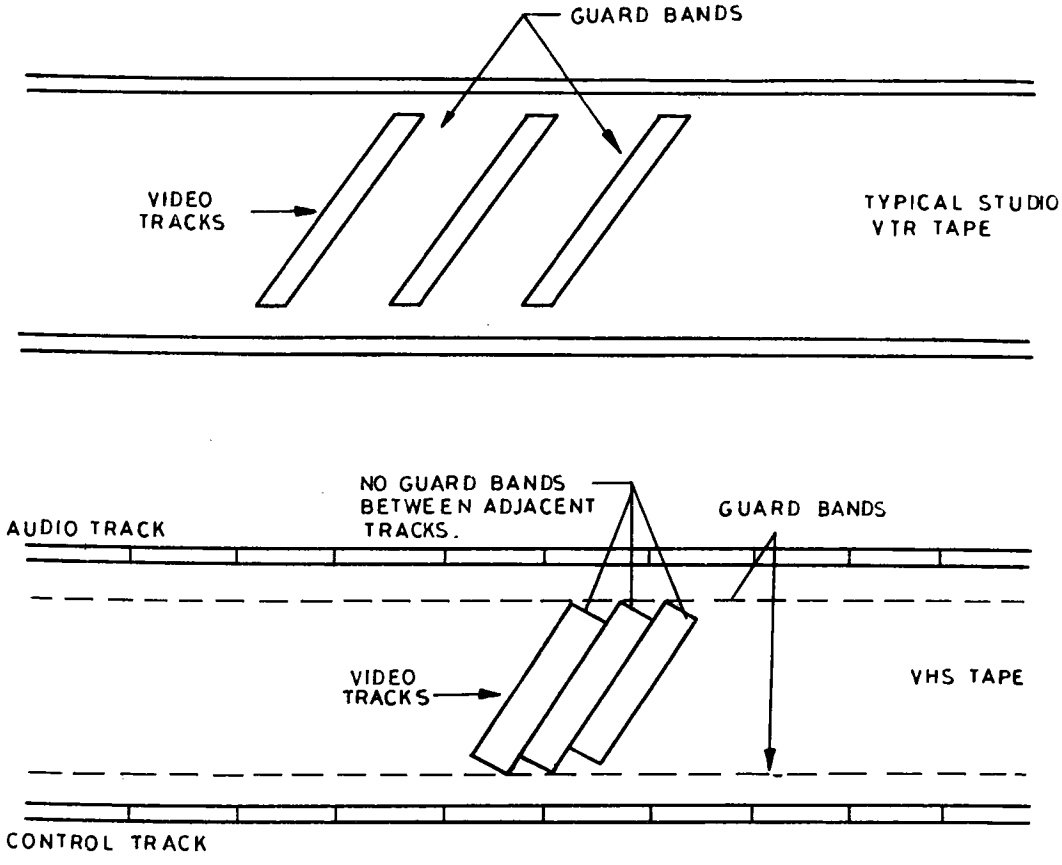

Fig. 2.7. Comparison of tapes with and without guard bands between adjacent video tracks

advanced by 90° at each successive horizontal line when recorded by head A. That means, the lines 1,2,3,4,5,6..... are shifted to 0°, +90°, +180°, +270°, 0°, +90°, +180°,.in succession i.e. clockwise. But when head B is recording, the phase of the 627 KHz signal is shifted in opposite direction i.e. anti clockwise by 90° on each successive line. Hence the lines will have 0°, 270°, 180°, 90°, 0°, 270°,. etc., as phase. Therefore, the pattern of phase of 627 KHz signal will be as follows :

LINE	1	2	3	4	5	6	7	8
HEAD A	0°	90°	180°	270°	0°	90°	180°	270°
HEAD B	0°	270°	180°	90°	0°	270°	180°	90°

It is clear that the phase of odd number are the same while that of even numbers are 180x apart.

At the time of playback, 627 KHz signal is again phase-inverted by using electronic switching and mixed with VCR oscillator frequency so as to get 4.43 MHz. This technique is used in all VHS VCRs.

3

TYPICAL VCR CIRCUITRY

The basic operations in all VHS VCRs are the same. In this book, we will be discussing the circuitry of National VHS VCR. By studying this, you will have no difficulty in understanding the functioning of similar VHS VCRs. Instead of a full schematic, the circuit descriptions are supplemented with partial schematic and block diagrams that are important from the servicing point of view. In all the VCRs, ICs are used for many functions.

To understand the functioning of VCR clearly, it is better to split the circuitry and operation into three sections namely :

1. Electronic circuitry
2. Electrical adjustments and
3. Mechanical operation.

Each section can be better understood by splitting it into various sub-sections. The electronic circuitry can be divided into :

1. Luminance signal circuits during Record
2. Luminance signal circuits during Playback
3. Colour signal circuits during Record
4. Colour signal circuits during Playback
5. Servo systems
6. System control circuit.

The electrical section can be divided into 5 sub-sections:

1. Power Supply
2. System control
3. Servo
4. Video, Audio and Colour
5. Timer.

Similarly, the mechanical section can be divided into 3 sub-sections :

1. Mechanical operations
2. Mechanical adjustments
3. Cleaning & Lubrication procedure.

3.1 TYPICAL LUMINANCE CIRCUIT OPERATION OF A VCR DURING RECORD

The video signal either from the video camera or from TV broadcast can be recorded. In case of programs broadcast from TV station, the video signal is in amplitude modulation, whereas the audio signal is in frequency modulation. So the video signal is first demodulated by an AM demodulator and given to a selector switch (S-3001).

The fig. 3.1 is a block diagram showing luminance (Y) signal flow in a VCR during Record.

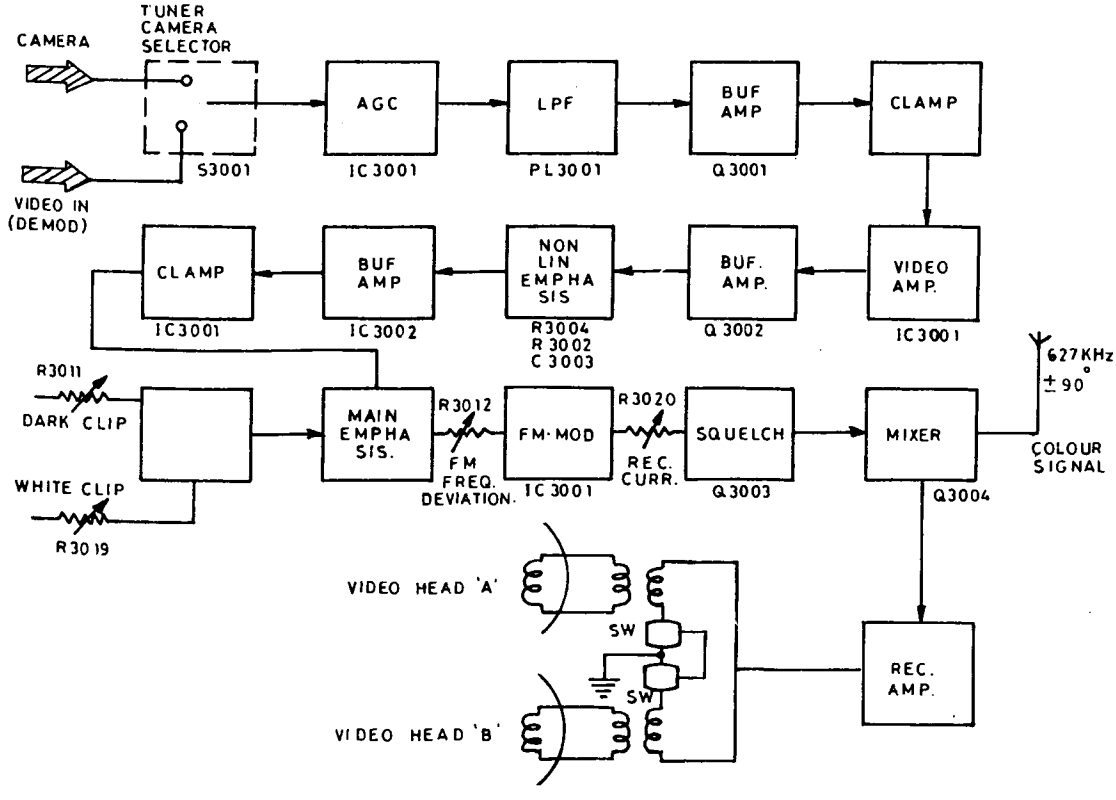

Fig. 3.1. 'Y' signal during record

The video signal is then fed to the AGC (Automatic Gain Control) amplifier Rec/Play selector switch and buffer amplifier which is within IC-3001. The AGC circuit is necessary to keep the output level constant at all times regardless of input level variations. The output of buffer is 2.87 Volts peak to peak and this is fed to low pass filter PL-3001, where the 4.43 MHz colour signal is attenuated.

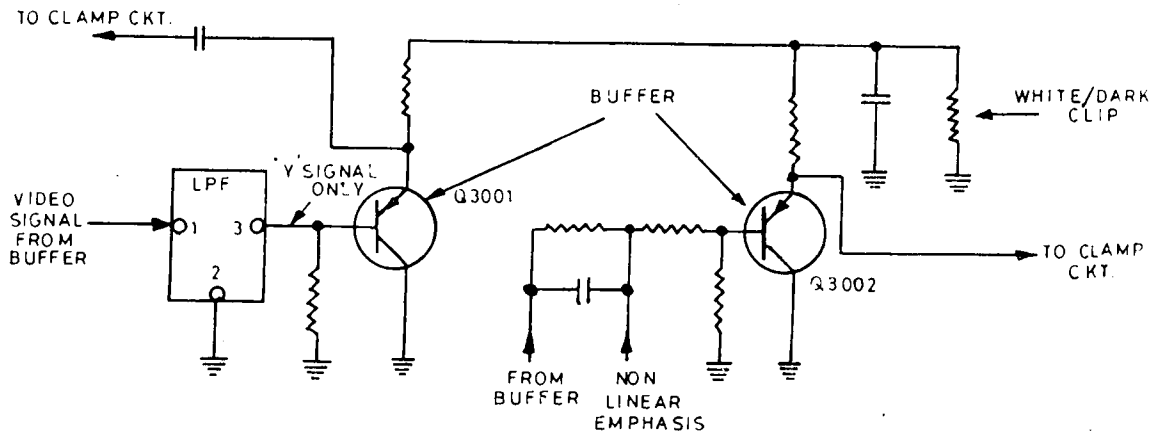

Fig. 3.2. LPF, buffer & non-linear emphasis

This is necessary to prevent beat interference due to mixing of the 4.43 MHz colour sub-carrier and FM modulation frequency. So the resultant output from the LPF will be purely Y signal which is fed to a buffer amplifier Q-3001.

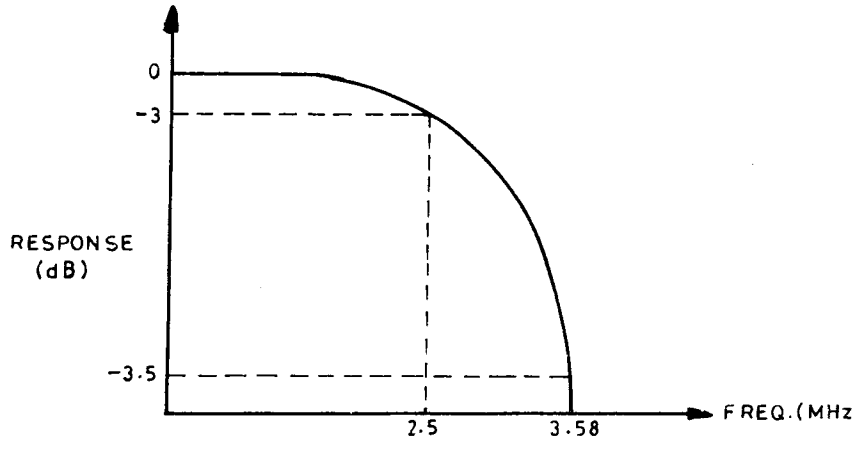

Fig. 3.3. Response of LPF

The output of the buffer is given to the clamp circuit where DC voltage of the sync tip remains constant regardless of the fluctuation in the video signal. The clamped signal is fed to video amplifier and then to a buffer amplifier. The video amplifier and buffer amplifier are part of IC-3001. The output from this buffer is 2.24 volt peak to peak.

NON LINEAR EMPHASIS CIRCUIT

The output of the buffer is given to a non-linear emphasis circuit consisting of C-3002, C-3003 & R-3004. This circuit increases the level of High Frequency component of the incoming video signal since High Frequency signals are more susceptible to noise. This is necessary because the signal to noise ratio (S/N ratio) of FM modulated signal becomes poor if the input level is low. So to improve the S/N ratio, the signal is pre-emphasized during recording. However, at the time of playback, the signal is passed through a circuit with the inverse characteristics (De- emphasize circuit). In this process, improvement of about 3dB in respect of S/N ratio is achieved.

CLAMP, PRE-EMPHASIS, WHITE & DARK CLIP CIRCUITS

The pre-emphasized signal is given to a buffer amplifier Q-3002 and then to a clamp circuit through the pin 16 of IC-3001. This is again done to ensure that the Sync tip remains accurately at constant potential so that the sync tip is exactly at 3.8 MHz during FM modulation.

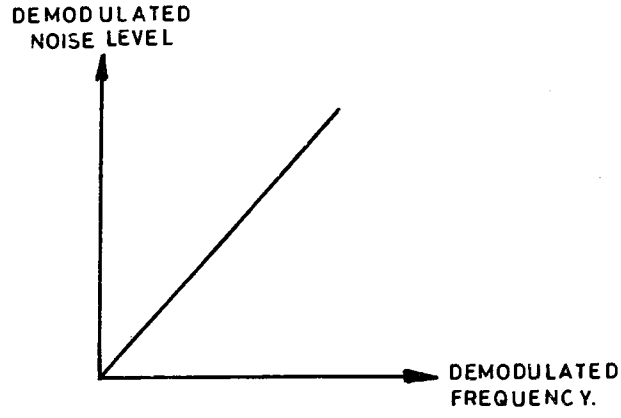

Fig. 3.4. Noise at FM signal demodulation

The video signal is then fed to the main emphasis circuit where the high frequency component of the signal is given a boost in order to improve S/N ratio at demodulation. The FM signal is not generally affected by noise and this would cause a change in amplitude but also result in phase modulation. So to get good video picture, noise should be eliminated at any cost. At higher frequencies, the FM signal would be influenced much by noise. So the main effort should be to increase the S/N ratio at higher frequencies. That's why, in the main emphasis circuit, a boost is given to high frequencies.

The video signal passing through the pre-emphasis circuit is applied to the white clip and dark clip circuits. Since a sharp overshoot and undershoot are caused at the rise and fall of the signal by pre-emphasis and can cause over-modulation when FM modulation is applied, the white level exceeding a specified level is clipped by a white clip. Similarly, the dark clip circuit clips the black level that goes below a specified point. R-3019 controls the white level while R-3011 controls dark level.

This signal is fed to a FM modulator through a FM deviation control resistor R-3012. The maximum frequency deviation of FM modulated

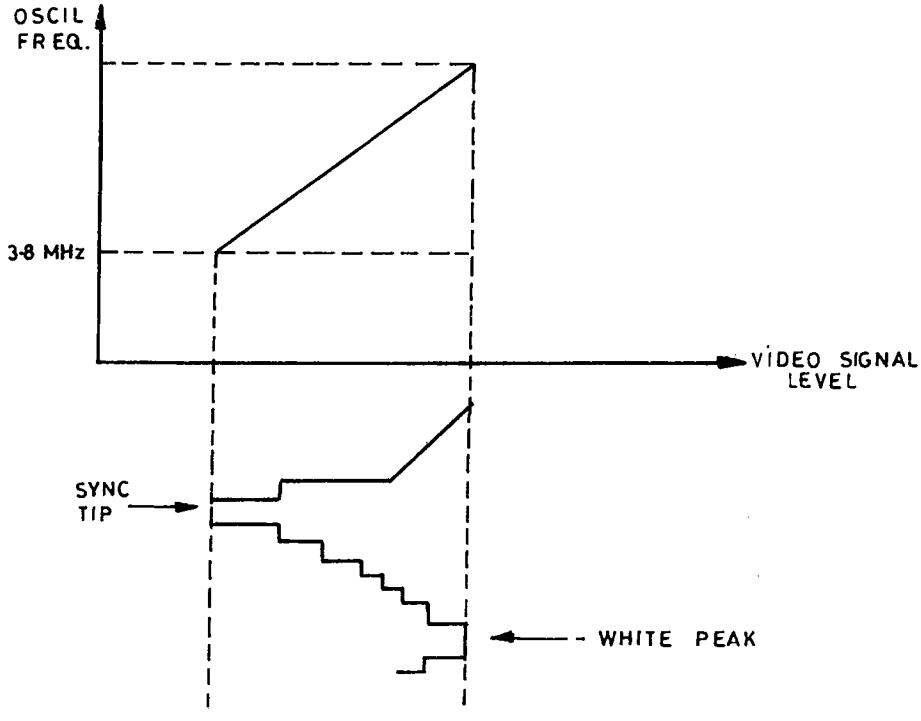

Fig. 3.5. FM modulation from sync tip to white peak

signal should be kept between the level of sync tip and level of peak white. If the video signal were fed directly to an FM modulator, then the frequency deviation would be excessive at the rise and fall time and this would result in over-modulation which would cause a reverse phenomenon or negative picture. So the deviation control resistor R-3012 sets the level of FM deviation and the signal level set by this resistor is TWO Volt peak to peak. The FM carrier frequency fed to the FM modulator is set by the carrier adjustment resistor R-3013 and this frequency would be 3.8 MHz.

The FM modulated signal comes out from the Pin 11 of IC-3001. However, the current of the modulated signal is to be adjusted for correct value of the recording current by adjusting the resistor R-3020.

As discussed earlier, the phase of the video head A will be 0°, 90°, 180° & 270° while that of video head B will be 0°, 270°, 180° & 90°. For achieving this, an FM carrier interleave circuit is used in-which the phase of signal given to video head B is advanced by half of the field frequency. This interleave circuit signal is given to FM modulator.

Now FM modulated Y-signal is fed to Y/C mixer. In this mixer, Y-signal and chroma signal are mixed. But in this chroma signal, the lower side band is attenuated. This is because during colour recording of broadcast signal, the chroma signal is down-converted to 627 KHz ± 500 Hz and this chroma signal will overlap with the lower sideband of the FM signal.

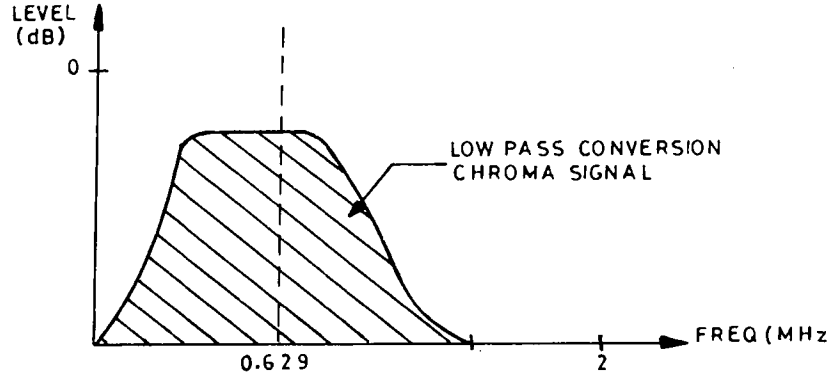

Fig. 3.6 HPF characteristics

The signal from the mixer is to be fed to the recording amplifier Q-3005 & Q-3006. But the signal should not be given until the loaded tape is correctly threaded around the drum. So to prevent signals from being fed to the record amplifier for about 1.5 seconds after completion of the loading, a squelch circuit is used. This prevents the recorded signal from being erased if the tape runs near the drum during the loading process.

The signal passing through the squelch circuit is applied to the record amplifier through mixer which produces the optimum recording current for each signal frequency to be recorded. The record amplifier uses a complementary single ended push-pull amplifier which minimizes crossover and switching distortion while still providing a low output impedance.Further the second harmonic distortion is eliminated in the push-pull operation.

The output of the recording amplifier is fed to the rotating video head A & B through a rotary transformer.

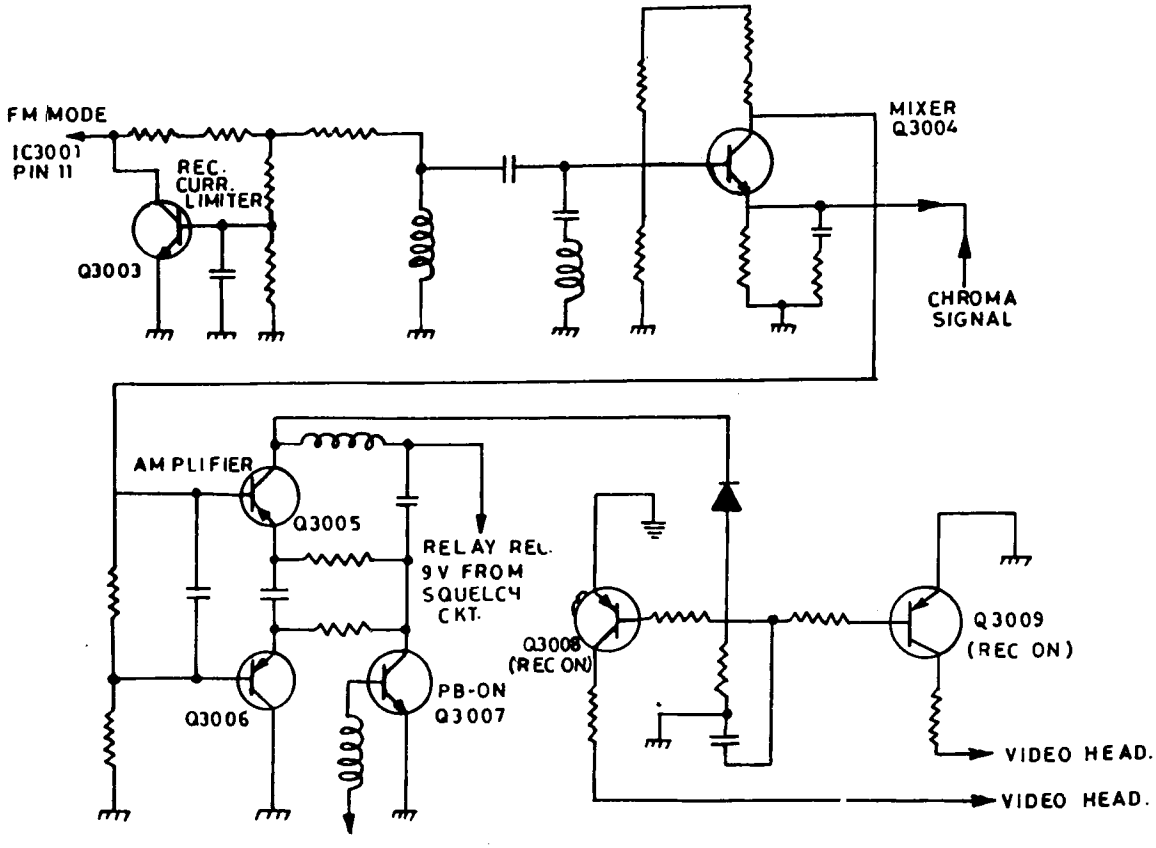

Fig. 3.7 Recording amplifier configuration

3.2.1 Typical Luminance Circuit Operation of a VCR during Playback

During playback, the signals from video tracks A & B are picked up by the video heads A & B and these signals are in the order of few millivolts. Hence these signals are fed to separate pre-amplifiers via a rotary transformer. The first and second pre-amplifiers (IC-3002 pins 4 & 6) improve the signal level to about 0.3 volt peak to peak and provide flat response. To ensure flat response, the resonant frequency and the Q factors of the video heads are adjusted. Fine tuning capacitors are provided to adjust the resonance of the heads at about 4.9 MHz and preset potentiometer is provided to set the Q factor of video head so that a flat response is obtained.

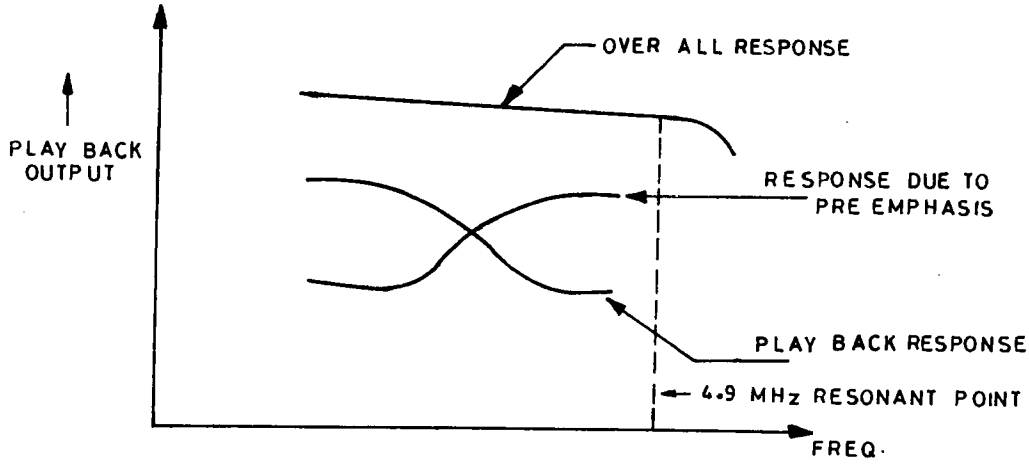

Fig. 3.8 Frequency response during play back

The signals amplified by the pre-amplifiers are mixed by switching circuits to produce a continuous noise free signal. There will be certain amount of overlap of signals of channel A & B and this overlap is eliminated by the head switching pulses (Head SW pulse) which are provided by cylinder FF pulses. This head SW pulses will switch the channel A and Channel B output such that the channel A is off at the instant channel B is on and vice versa.

3.2.2. Switching & Mixing Process to produce a continuous signal from the Video Heads

This continuous signal contains both luminance as well as chrominance signal. Hence this signal is fed to the chroma amplifier to handle the colour signal and AGC amplifier which handles the

luminance signal. We shall discuss the chroma signal processing in a separate chapter.

Now let us consider the luminance signal. The output of the AGC amplifier is fed to the emitter follower which provides low output impedance signal. A portion of the emitter follower output is fed to AGC detector which converts it into DC voltage and feeds it to AGC amplifier as AGC control signal.

The output of emitter follower is fed to phase compensator network consisting of L-3009 and C-3038.

The phase compensator corrects any phase error in the chroma signal. The signal from this circuit is fed to amplifier Q-3010.

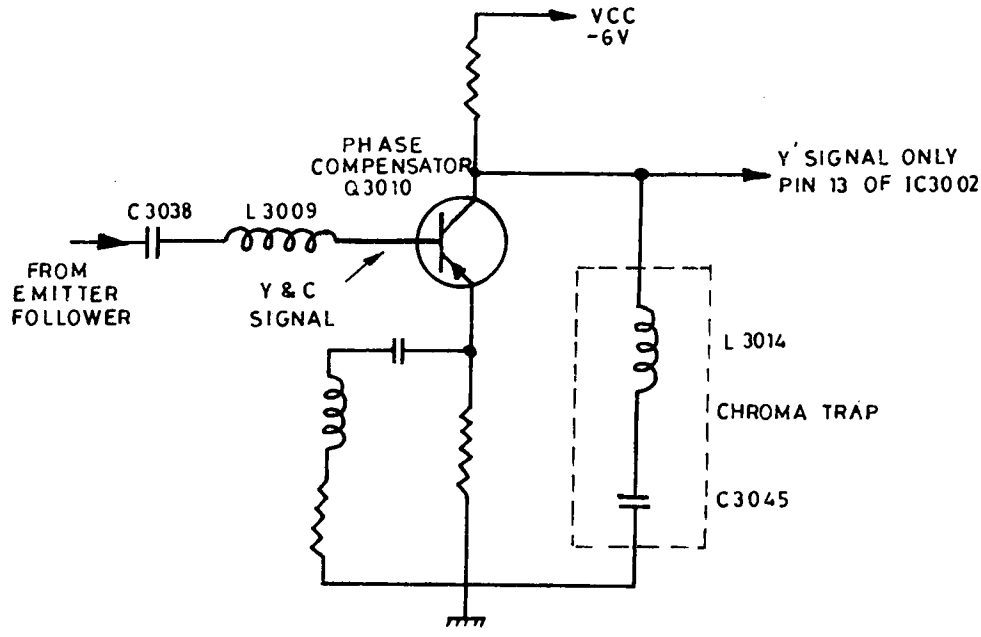

Fig. 3.9 Separation of 'Y' signal from 'C' signal

The output of Q-3010 contains Y & C signals and the output is taken through L-3014 & C-3045 which acts as a trap for 627 KHz i.e. chroma signal. As a result in the output, the chroma signal is filtered out and only Y signal will be available at the collector of Q-3010 and this signal is further amplified by IC-3002 and the amplified Y signal is available at pin 13 of IC-3002 .

3.2.3. Drop out Compensation Circuit

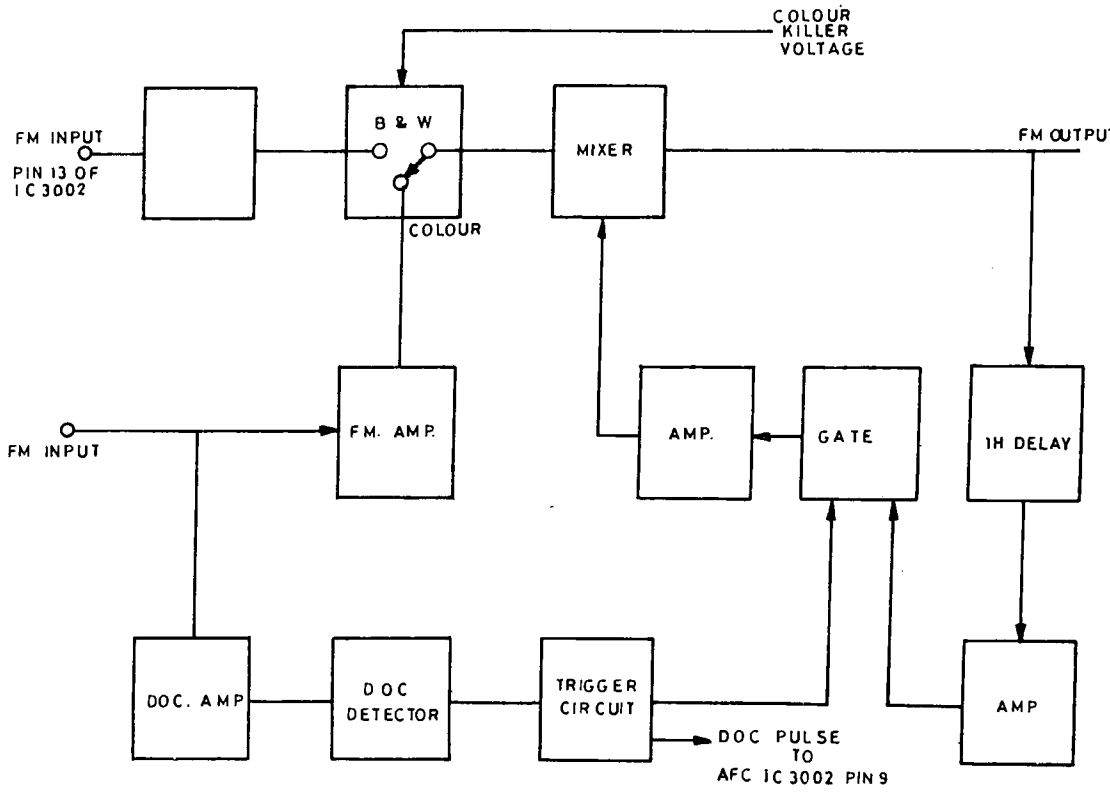

Fig. 3.10 Drop out compensator

The Drop Out Compensation circuit (DOC) is given in figure 3.10.

The AGC control signal is used to respond quickly to any change that takes place even at one sixtieth (1/60th) of a second. But this does not respond to short period changes such as drop out, which means a line in the picture is lost. So the lost line must be replaced by the line that occurred before the lost line occurred. For this, hysteresis effect viz., a signal from the past is retained to substitute for the current one which has been lost, is used.

The basic function of DOC circuit is therefore to detect any drop out and compensate the signal during such drop out. The DOC circuit

is generally made inoperative during black and white signal by colour killer voltage supplied to a change-over switch, since black and white signal does not exhibit any drop out phenomenon. This results in passing of the input signal to the output through the mixer without any compensation.

But during colour signal broadcast, the input signal is passed through a DOC amplifier and DOC detector which detects and produces a pulse if any drop out is present. This DOC pulse is applied to a Gate circuit which permits the signal to pass through a 1 H delay line. This 1H delay line compensates for the drop out and this signal is passed to the output through the mixer.

DOUBLE LIMITER CIRCUIT

Pre-emphasis of FM signal can result in sharp overshoot and this may result in over modulation when FM modulated. Such a situation would cause AM modulation, that is the white portion of the picture would turn to black or vice-versa.

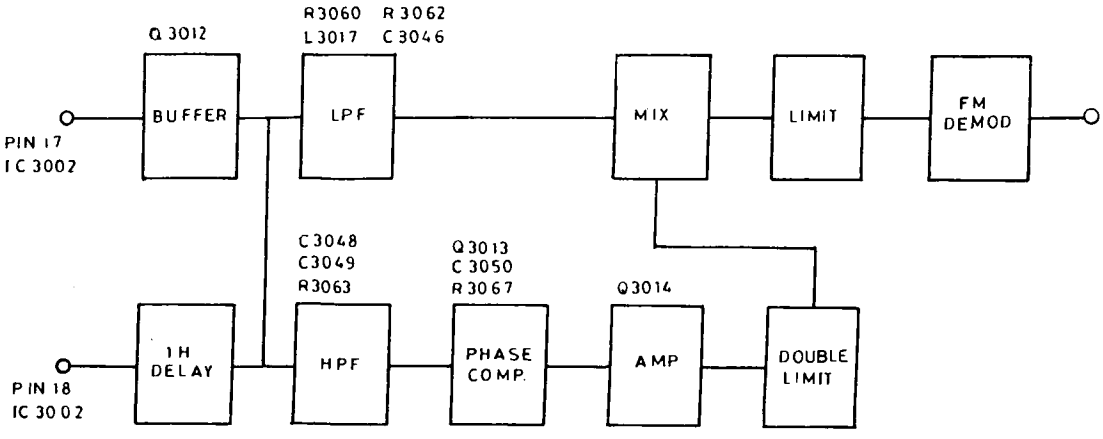

Fig. 3.11. Double limiter and FM demodulator

Consequently, the S/N ratio of the signal would deteriorate. Though the white and dark clip circuits serve to reduce overshoot, any AM modulation must be eliminated by limiting. We could use conventional limiting circuit but it will result in loss of low frequency side bands and also this would result in loss of high frequency signals after demodulation, that means, deterioration of picture quality.

So in order to preserve the picture quality, double limiter circuitry is used. The FM modulated Y signal from the buffer amplifier Q-3012 is allowed to pass through high pass filter (C-3048, C-3049 & R-3063) as well as low pass filter (R-3060, R-3062, L-3017 & C-3046) simultaneously and this results in separation of carrier components as well as low frequency side band components. The separated carrier component is passed through the phase comparator consisting of Q-3013, R-3067 & C-3050. The output of Q-3013 is fed to an amplifier Q-3014, from where the signal is fed to the double limiter at pin 5 of IC-3003. The signal is limited and fed to the mixer where the carrier components and low frequency side bands are mixed together again. In this process, only signal and not the noise is amplified.

FM DEMODULATOR CIRCUIT

The output from the mixer is fed to FM demodulator and the demodulated Y signal is taken out from Pin 12 of IC-3003. This is fed to low pass filter circuit FL-3002 and this filter allows the low frequency signal and prevents the 3.8 MHz signal, if any. Then the signal is fed to the video amplifier Q-3015, the output of which is fed to De-emphasize circuit consisting of R-3086, C-3068 & C-3069. Now the boost given to the High frequency signal by the pre-emphasis circuit during FM modulation is removed by the same amount by the de-emphasize circuit in the demodulator stage.

Then it is fed to the playback amplifier located in IC-3001 via its pin 1. The output of playback amplifier is given to a changeover switch. After this, the signal is fed to Buffer amplifier which is also used while recording.

Here the signal is split into two portions. One portion can be used for recording while the other portion is used for monitoring. This is

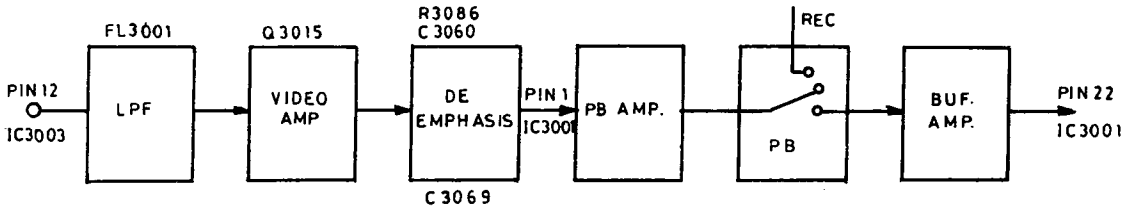

Fig. 3.12 FM demodulator circuit

because we may like to record a particular programme while watching. That's why a portion of signal follows the path of the Y signal while recording i.e. it passes through low pass filter FL-3001, buffer Q-3001, clamp, video amp and buffer amplifier.

NOISE CANCELLER & Y/C MIXER CIRCUIT

The signal from the buffer amplifier is fed to high pass filter circuit and also to the noise canceller directly via pin 18 of IC-3003. The HPF consists of R-3077, R-3078, C-3061 & C-3062 and the signal passing through this HPF is then limited and applied to noise canceller. Since the signal is also fed directly to this circuit, the high frequency component is cancelled. The noise canceller circuit used here is a low frequency boost circuit and so the picture quality is improved.

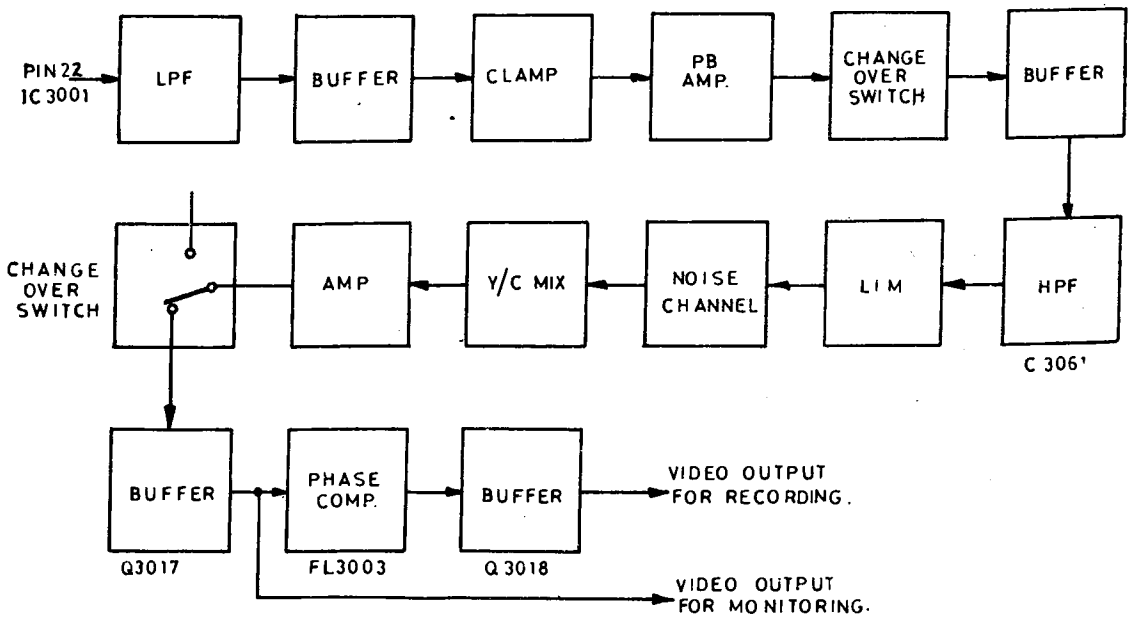

Fig. 3.13 Noise canceller & Y/C mixer circuit

The output of noise canceller is fed to mixer. For this Y/C mixer, the chroma signal of 4.43 MHz. is fed from pin 7 of IC- 3001 via pin 17 of IC-3003. Then this signal is fed to amplifier, and then buffer amplifier. The buffer output is divided into two portions and is used for

(1) RF convertor
(2) Monitoring

The portion meant for RF convertor is passed through a phase comparator FL-3003 & then to buffer amplifier Q-3018 for recording

4

VHS COLOUR SIGNAL CIRCUIT DURING RECORD

The basic operation of colour signal circuit during record is as follows:

(1) The colour signal is first separated from video signal in which luminance signal and chroma signal are combined.

(2) The separated colour signal is then boosted and maintained at certain level by using automatic colour control circuit.

(3) Then it is applied to the balanced modulator where it is mixed with the reference signal of 4.43 MHz. to produce the desired 627 KHz. for recording on video tape.

All these operations are shown in fig. 4.1

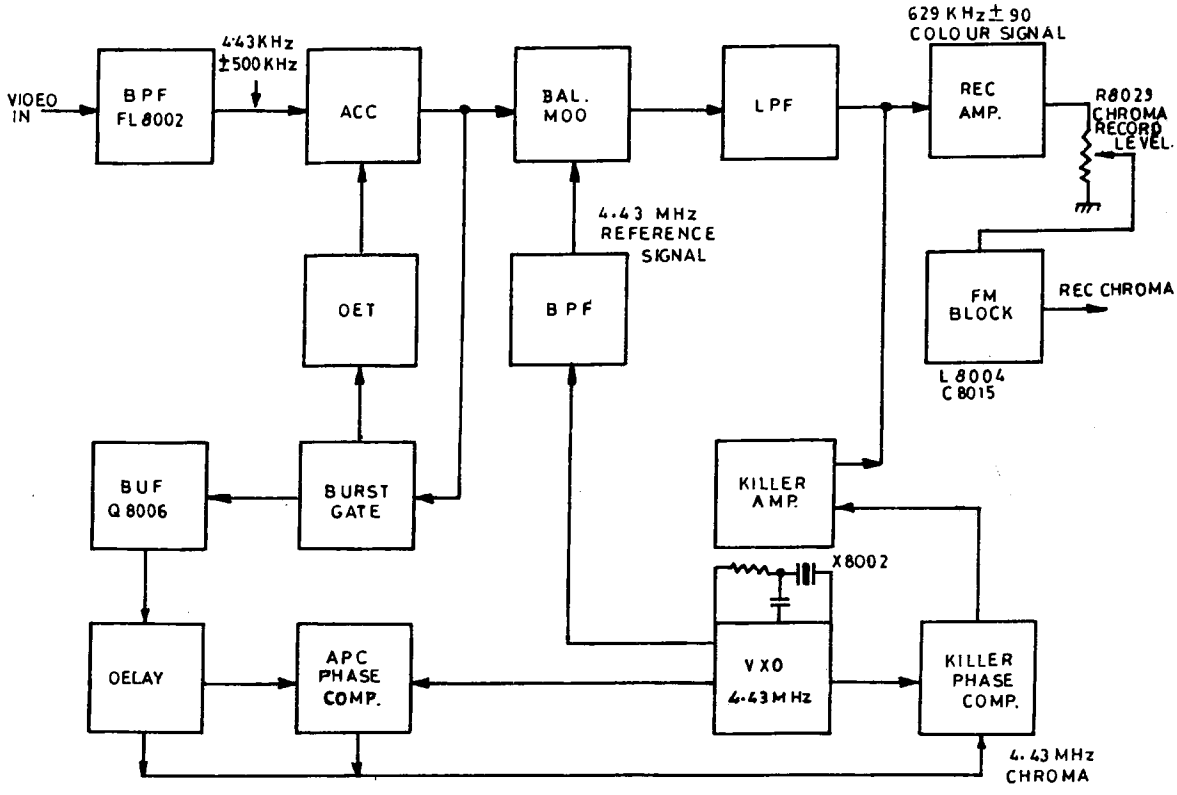

The video signal either from video camera or TV broadcast is selected by selector switch S-3001. It is then passed through band pass filter FL-8002 to allow only the 4.43 MHz. q 500 KHz. chroma signal. It is then fed to the automatic colour control circuit via pin 1 of IC-8001 through Record/Playback selector switch.

ACC (Automatic Colour Control)

The ACC circuit in IC-8001 is used both for recording as well as playback. The input to this ACC is 0.3 V (peak to peak) and the output is 0.6 V (peak to peak), i.e. the output is maintained at constant level.

To maintain it at constant level, the output of ACC at pin 16 is fed to burst gate and detector. Here the peak of the colour signal is detected in the detector circuit which produces a control voltage that is applied to ACC circuit as a bias voltage. Whenever the peak of colour signal exceeds the prescribed limit, more d.c. voltage, hence more bias voltage, is produced and fed to ACC. This control is the colour signal and keeps at 0.6 V (Peak to Peak) always.

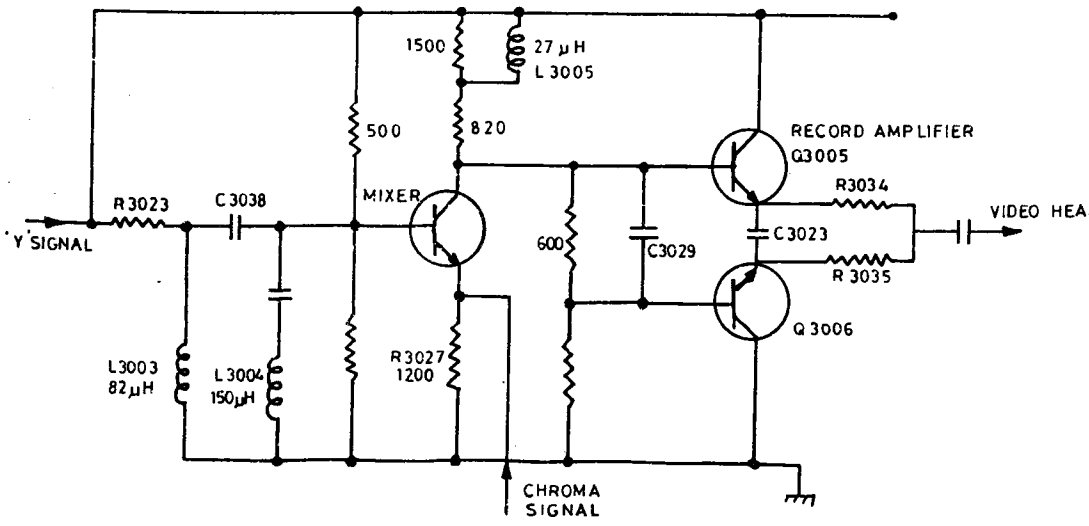

Fig. 4.2 Mixer & Record amplifier

BALANCED MODULATOR

The chroma signal of 4.43 MHz q500 KHz from ACC circuit is applied to balanced modulator at pin 16. This balanced modulator also receives 4.43 MHz from APC (Automatic Phase Control) circuit. This produces both sum and difference frequencies at the balanced modulator output (pin 12). The 4.43 MHz signal is rotated in phase by +90x each 1H period for channel 1 and -90x for channel 2. As a result, the difference frequency at pin 12 is also rotated in phase by q90x. This difference frequency of 627 KHz q90x is passed by Low Pass Filter FL 8003 where the sum frequency is rejected. The difference frequency signal is allowed to pass through this LPF to Record amplifier via pin 8. R-8029 sets the level of chroma signal during record. During black and white program, the colour killer amplifier acts and sends the signal to the input of Record amplifier and this in turn, switches off the chroma record amplifier. This is necessary to avoid noise being recorded in the video tape when the colour signal is not present.

The colour killer amplifier gets the signal from the colour killer phase comparator where the 4.43 MHz signal from the variable crystal oscillator and 4.43 MHz chroma signal at the input of the balanced modulator are compared. If the video input does not contain any colour signal, then the colour killer amplifier acts immediately to stop the functioning of the chroma record amplifier.

The sub-carrier chroma signal fed at pin 8 to the record amplifier gets amplified from 0.7 volts to 1.2 volts. Then at R- 8029, the level of colour signal is set for recording. This signal is passed through FM block consisting of L-8004 & C-8015 to the emitter of Q-3004 where this chroma signal is mixed with luminance signal and sent to recording head via recording amplifier Q-3005 & Q-3006.

5

VHS COLOUR SIGNAL CIRCUIT OPERATION DURING PLAYBACK

The basic operation of colour signal circuit during playback is as follows :

1. The colour signal is first separated from the luminance signal by passing it through Low Pass Filter which allows only 627 KHz ± 90° chroma signal.
2. Then at ACC (Automatic colour control) unit, the chroma signal is maintained at specified level.
3. This chroma signal is then mixed with 4.43 MHz ± 90° from the APC circuit in the balanced modulator and passed through band pass filter. As a result, the chroma sub-carrier frequency of 4.43 MHz is coming out.
4. It is then amplified at Playback amplifier which is linked with colour killer amplifier. This colour killer amplifier is a switching circuit which allows the signal to pass only when there is a colour information present in the video signal. When video signal contains no colour signal or when the black and white signal is the video signal, then the killer amplifier prevents a colour signal from being fed further. This ensures elimination of noise components from the chroma circuit being applied during black and white signal.
5. It is also passed through delay line circuit in order to remove the cross talk from the adjacent video tracks, before being fed to luma-chroma mixer.

These basic operations are explained in fig. 5.1

The playback signal (the video FM signal plus 627 KHz) received from pin 10 of IC-3002 is fed to the video amplifier Q-8001 which is a common emitter amplifier. Its output is fed to the low pass filter PL-8001 which allows only 627 KHz signal to pass through. The signal is then passed on to pin 18 of IC-8001.

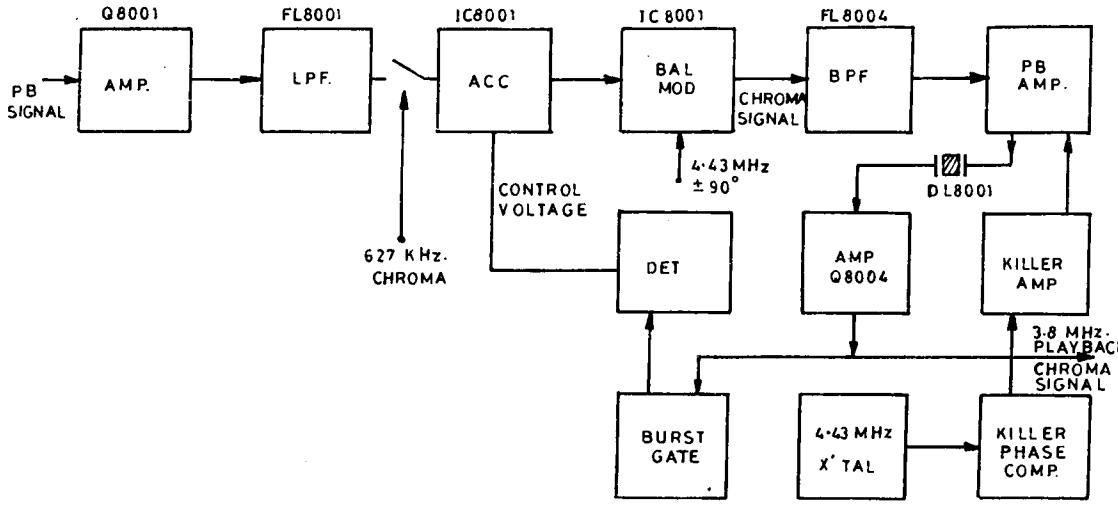

Fig. 5.1 Chroma signal during play back

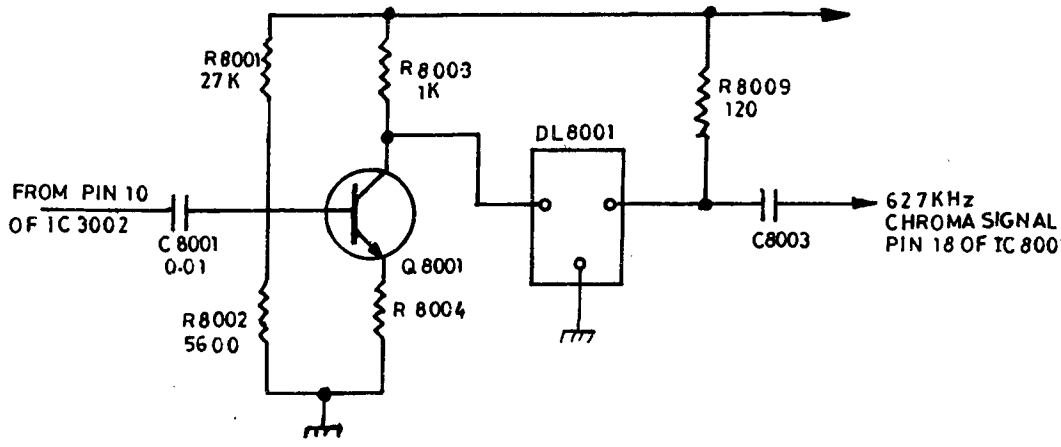

Fig. 5.2 Amplifier & low pass filter

ACC CIRCUIT

The signal is then passed through Record/Play switch to the ACC (Automatic colour control circuit). The 627 KHz chroma signal is then mixed with 4.43 MHz ± 90° fed from APC circuit. As a result, 3.8 MHz

colour signal comes out of balanced modulator and this signal, is passed through bandpass filter BPF FL 8004, playback amplifier, delay line DL-8001 and amplifier Q-8004, to the burse gate. This gate opens only during the burst period and supplies only the burst signal to the detector. In the detector, the peak value of 3.8 MHz colour signal is converted to a DC voltage used as a bias or control voltage by the ACC. This control voltage maintains the 627 KHz colour signal at constant level during playback.

1 H DELAY LINE FILTER

The 1H delay line filter is designed to allow only 3.8 MHz chroma signal. The equivalent circuit of this filter is as given below :

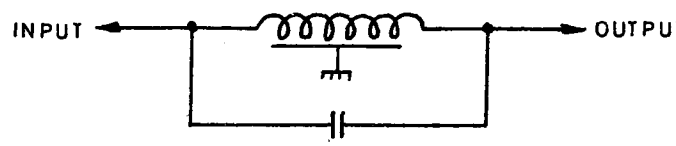

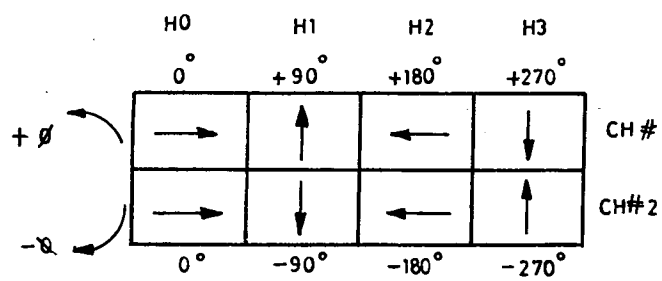

TABLE 5.1 VHS COLOUR SIGNAL DURING RECORD.

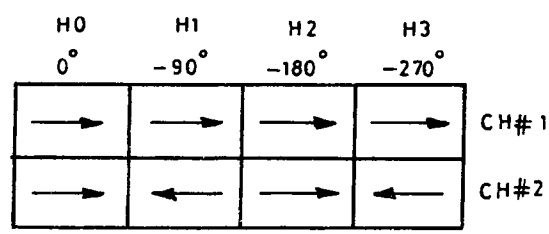

TABLE 5.2 VHS COLOUR SIGNAL DURING PLAY.

Fig. 5.3 1H delay line equivalent circuit

In VHS colour recording system, the channel-1 track is recorded with the chroma phase advanced by 90x every 1 H and the channel-2 track is recorded with the chroma phase delayed by 90x every 1 H. This produces a recording pattern similar to Table 5.1

At the time of recording, if there is slight overlapping of channel-1 video signal on channel-2, then at the time of playback, this error is removed at this 1 H delay filter, as the cross-talk component gets cancelled at every 180°. And on the other hand, the main video signal gets approximately doubled. So the result is that the main signal gets amplified by about 3 dB.

The signal from this delay line DL-8001 gets amplified at amplifier Q-8004.

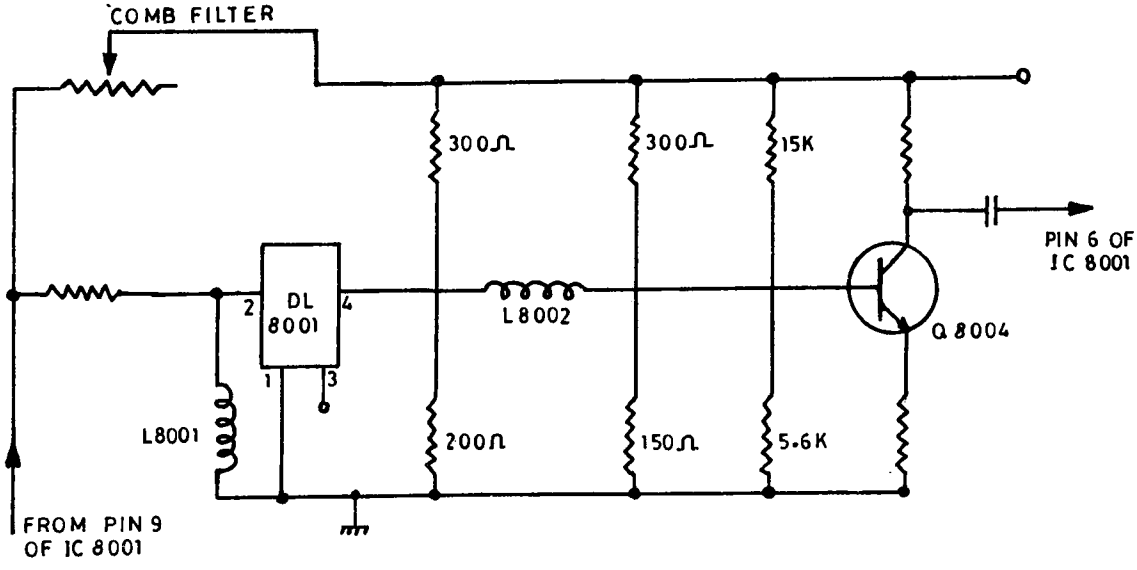

Fig. 5.4

However, at the base of Q-8004, the high frequency sound bias recorded on the tape is removed by the trap coil L-8002. Then the signal is fed through Rec/Play switch to the pin 17 of IC-3003 where it gets mixed with Y signal.

6

VHS SERVO SYSTEM

A servo is an electronic cum mechanical arrangement by which the speed and position of moving parts of VCR are controlled to ensure its perfect functioning.

NECESSITY OF SERVO IN VCR

1. The positioning and timing of the two video heads A & B with respect to the tape is very important because of the fact that even a small 1/10th of displacement of the line recording becomes highly objectionable and can cause an error of 6 micro seconds.
2. Proper switching of two video heads is necessary so that the video head 'A' works on odd lines and the head 'B' works on even lines and this repeats.
3. The motors should run at correct speed and the head and tape speed should be proper and run in the same form and timings properly synchronizing with the incoming video signal.
4. However much the heads are made preciously, still there can be slight eccentricity as the drum may not be 100 % round.
5. Due to ageing, the tape tension may change and there can be stretching and this will cause bad picture.

   To operate the VCR properly, the servo control system must have two signal informations namely :

   (a) a reference signal that gives the desired state of the moving parts in VCR and
   (b) a feed back signal that on sensing gives the present condition of the moving parts.

Then the feedback signal is compared with the reference signal at a comparator circuit where an error signal (+ or -) proportional to the difference between the feedback signal and reference signal is produced. This error signal is then given to some drive circuits to correct the speed and position of the machinery. Control is fully achieved when the machine stays within the pre-determined limits.

SERVO SIGNALS

There are five signals commonly used in VCR. They are :

1. Cylinder FG Pulses

The cylinder Frequency Generator pulses are developed by a generator in the video head cylinder. The generator consists of an 8-pole magnet installed in the cylinder rotor and a detection coil in the stator. When the cylinder rotates at 25 revolutions per second, the stator coil detects the moving magnetic fields and produces the cylinder FG pulses at a frequency of 100 Hz.

2. Capstan FG Pulses

The capstan FG pulses are developed by a generator in the tape capstan and are applied to the capstan speed control circuits as well as the capstan phase control circuits through a divider during record. The generator consists of a 240 pole magnet installed in the lower part of the capstan shaft and a detection coil in the stator. When the capstan rotates, the stator coil detects the moving magnetic field and produces the capstan FG pulses. The frequency of the capstan FG pulses depends on the speed of the capstan which in turn controls the tape speed. Depending upon the playing time, the speed of the capstan is varied.

3. Cylinder Tach Pulses (CTP)

The cylinder Tach pulses are developed by another generator in the cylinder and are applied to the cylinder phase control circuits. The generator consists of a pair magnets installed symmetrically in a disk in the lower part of the cylinder shaft and a stationary pick-up head. When the cylinder rotates, the CTP pick-up head detects the moving magnetic fields. The pulse frequency is a constant 25 Hz. In effect, the CTP indicates the video head channel switching and is used as a comparison signal in the cylinder phase control circuits during both Record and Playback.

4. REF 50 Hz

The reference signal for the phase control system of both the capstan motor and the cylinder motor is obtained from a crystal oscillator with a frequency of 4.433619 MHz $\pm$ 10Mhz. A frequency of 50 Hz is obtained by dividing the oscillator frequency. The REF 50 Hz

is used for the cylinder phase control circuit only during playback. During record, the cylinder phase control circuit receives broadcast V-sync pulses from the tuner.

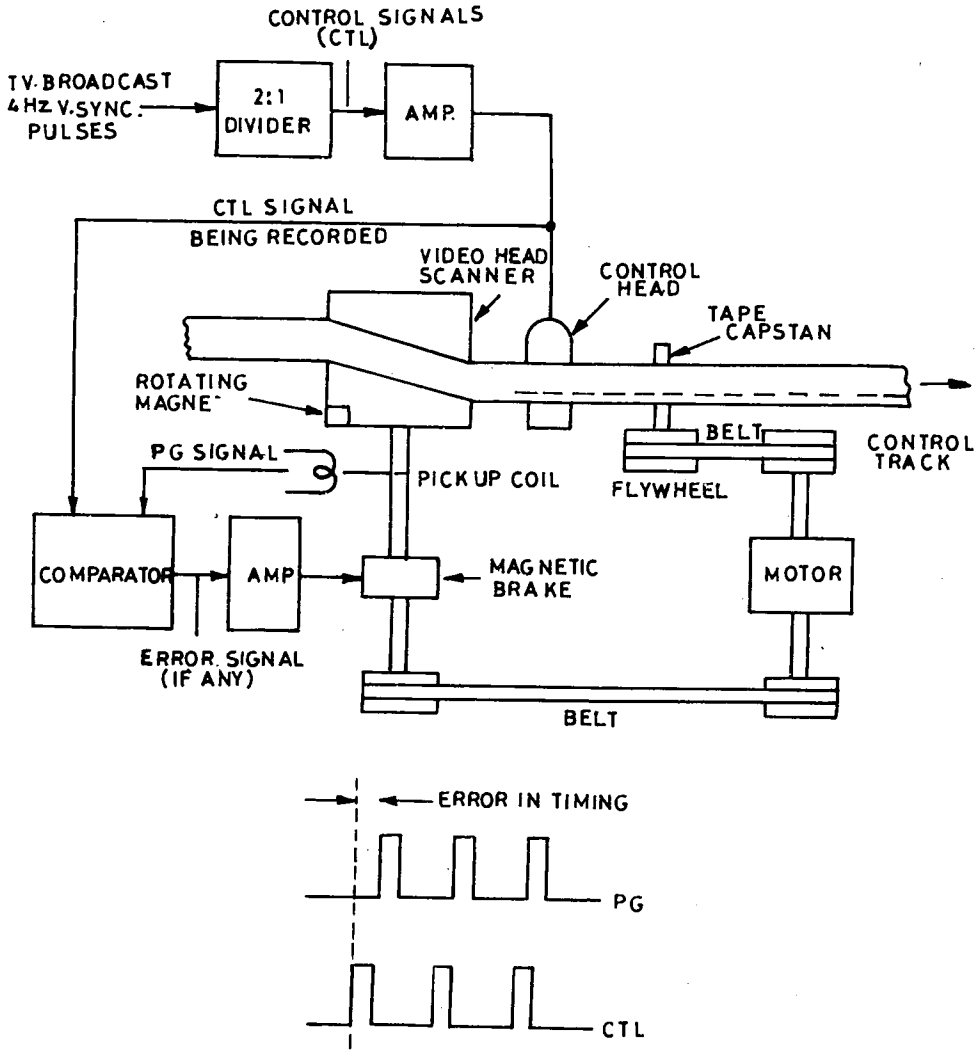

Fig. 6.1 Operation of basic VCR servo system during record

5. Control Track Pulse CTL-25 Hz

The 25 Hz control track pulses are the broadcast V-sync pulses recorded on tape during record. At playback, the pulses are picked up by the control head and applied to the capstan phase control circuit.

Let us see the servo system in detail :

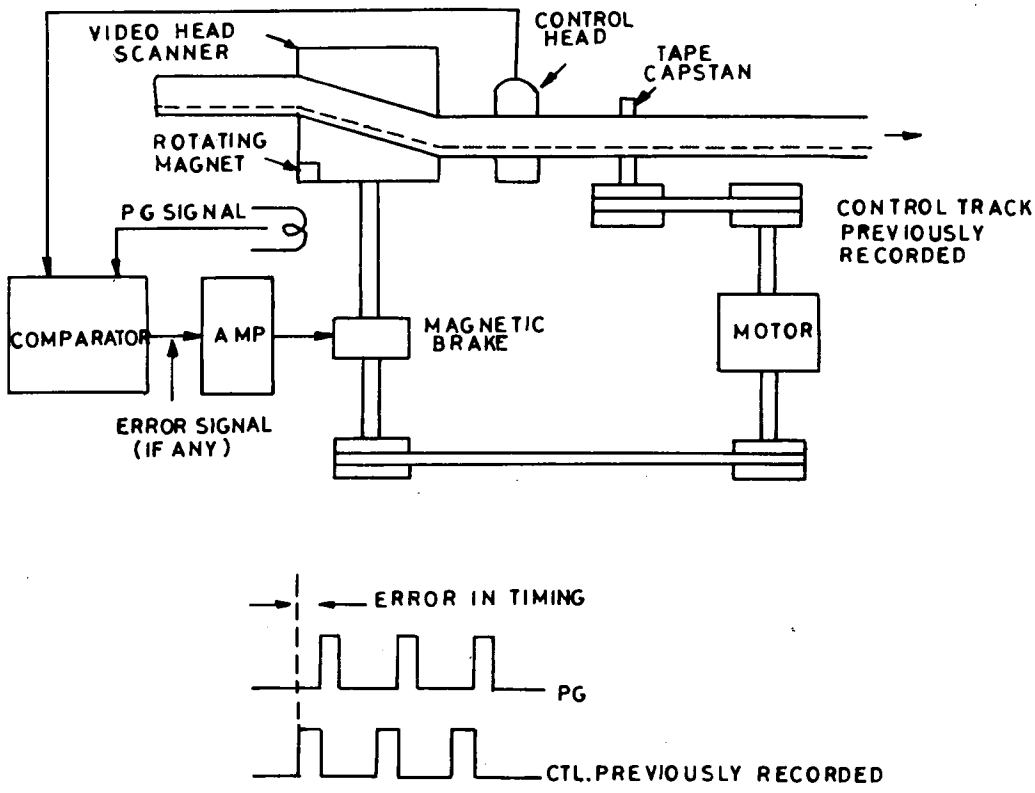

Fig. 6.2 Operation of basic VCR servo system during play back

1. Head Switching Pulse (Head SW)

The two video heads are to be switched alternately to record the odd and even fields and for this 25 Hz signal is to be fed to video heads alternatively.

The 25 Hz cylinder tach pulse from the pulse generator installed in the lower part of the cylinder shaft is applied to pin 22 of IC-2001 (servo control IC). Then the signal is applied to Schmit trigger circuit and then to two monostable multivibrators MM1 and MM2. The pulse applied to Schmit circuit is used to trigger the monostable multivibrators which act as an adjustable delay circuit to determine the video head switching phase. The delay can be changed by adjusting the time constant of MM1 and MM2.

The output from MM1 and MM2 is fed to a RS flip-flop. The output of this flip-flop circuit is taken through the pin 19 for feeding it to head switching pulse circuit (SW).

2. Control Head Pulse Recording

During record, the control pulse is also recorded in video tape in addition to video programme. For this, 50 Hz reference signal is fed to Pin 11 of IC-2001. This signal is fed to buffer oscillator from where the signal is fed to a 1/2 divider circuit. The 50 Hz signal is divided into 25 Hz signal, which in turn is fed through a duty monostable multivibrator, amplifier and record-on switch to pin 9 from where the signal is fed to control head.

During recording of off-broadcast programme, the vertical sync signal is used as reference signal in place of 50 Hz reference signal.

3. Capstan Phase Control Loop

The 25 Hz pulse is also used for capstan phase control and for this, the signal from the divider is converted into trapezoidal signal which is then fed via pin 17 of IC-2001 to capstan phase loop circuit to pin 15 of IC-2003.

4. Cylinder Servo Control System

The cylinder servo control system has to control both the speed and timing of the rotating cylinder. The rotation of the cylinder must be in exact phase and frequency to the video and sync pulses that are recorded on that track. The phase is correct when the video track change over from one track to the next track is mostly at the bottom.

Most of the modern VCRs use direct drive motors which are rotated by drive voltages. The drive voltages are given to the motor drive IC which controls the speed of the motor. The rotation of the motor is sensed by head tach coils or Pulse Generator coils (PG coils). This information is given to the servo circuits for comparison of phase and frequency of the motor. An error voltage is developed whenever there is a difference and this error voltage is fed to the drive IC which in turn increase or decrease the speed of the motor.

Now in this particular National VCR, the voltages developed by PG coils depending upon the rotation of the cylinder is fed via pin 22 of IC-2001 to Schmit trigger circuit, as stated earlier. Then the signal is fed to flip-flop circuit through monostable multi-vibrators. The output of FF is fed to the sample and hold circuit through Rec SF multivibrator (Rec SF MM3).

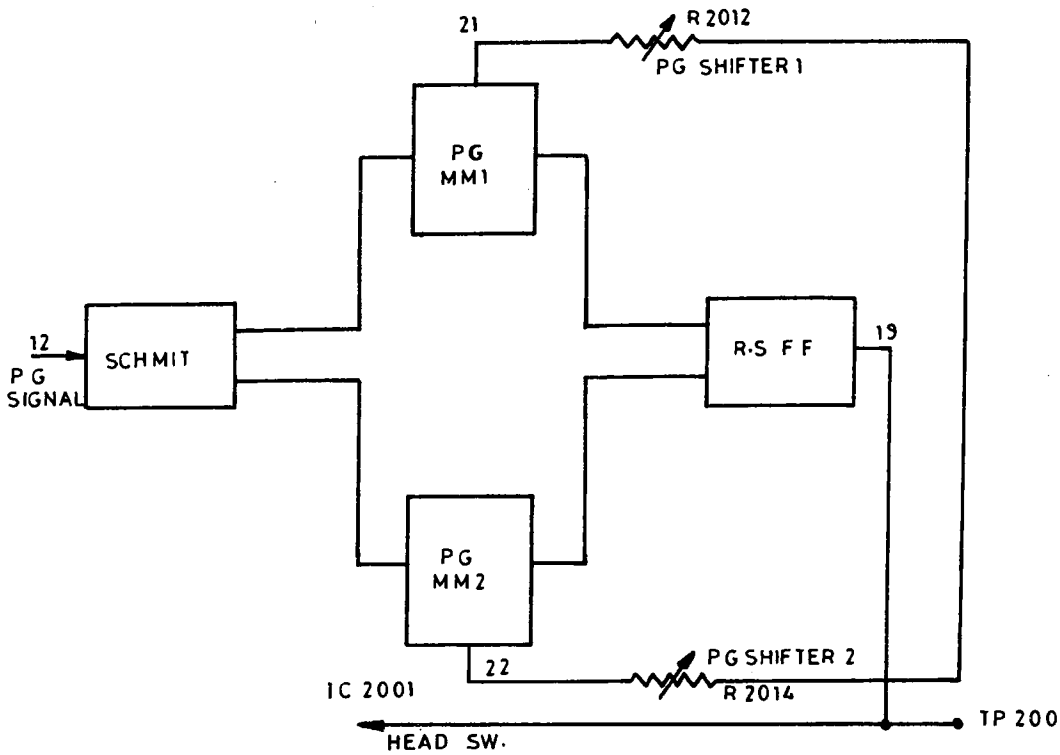

Fig. 6.3 Cylinder Servo Control System

The sample-and-hold (S/H 1) circuit also receives the reference signal in the form of trapezoidal pulse from the buffer oscillator. These two signals are compared in the S/H 1 circuit to produce the desired cylinder phase control signal at pin 15 of IC-2001.

This phase control signal is also applied to a monostable multivibrator MM via pin 15 and pin 5. This signal is then applied to another sample-and-hold circuit S/H 2. This S/H 2 circuit also receives comparison signal from cylinder frequency generator.

The cylinder FG generator receives the signals P1, P2 & P3 from the cylinder coil and these signals are passed to a detector via pin 3, 5 & 7 of IC-2002. The signals from this detector are fed to three differential amplifiers as well as cylinder FG generator. The output of the differential amplifiers are fed to three pre-amplifiers. Feedback signals which are received via pin 20 and 22 are fed to pre-amplifiers. In feedback circuit, two signals namely (1) the pulse of S/H 2 circuit via pin 1 of IC- 2002 and (2) the output signals of preamplifiers fed via pin 20 and 22 are compared and this keeps the phase of the rotating cylinder at a constant level.

Simultaneously, the speed of the cylinder should be kept constant. For this, the output signals from cylinder FG generator is fed to a Schmit circuit. Then the signal from this is divided into two and 25 Hz signal is produced. This signal is fed to trapezoidal circuit and this trapezoidal signal is compared with sample-and-hold signal.

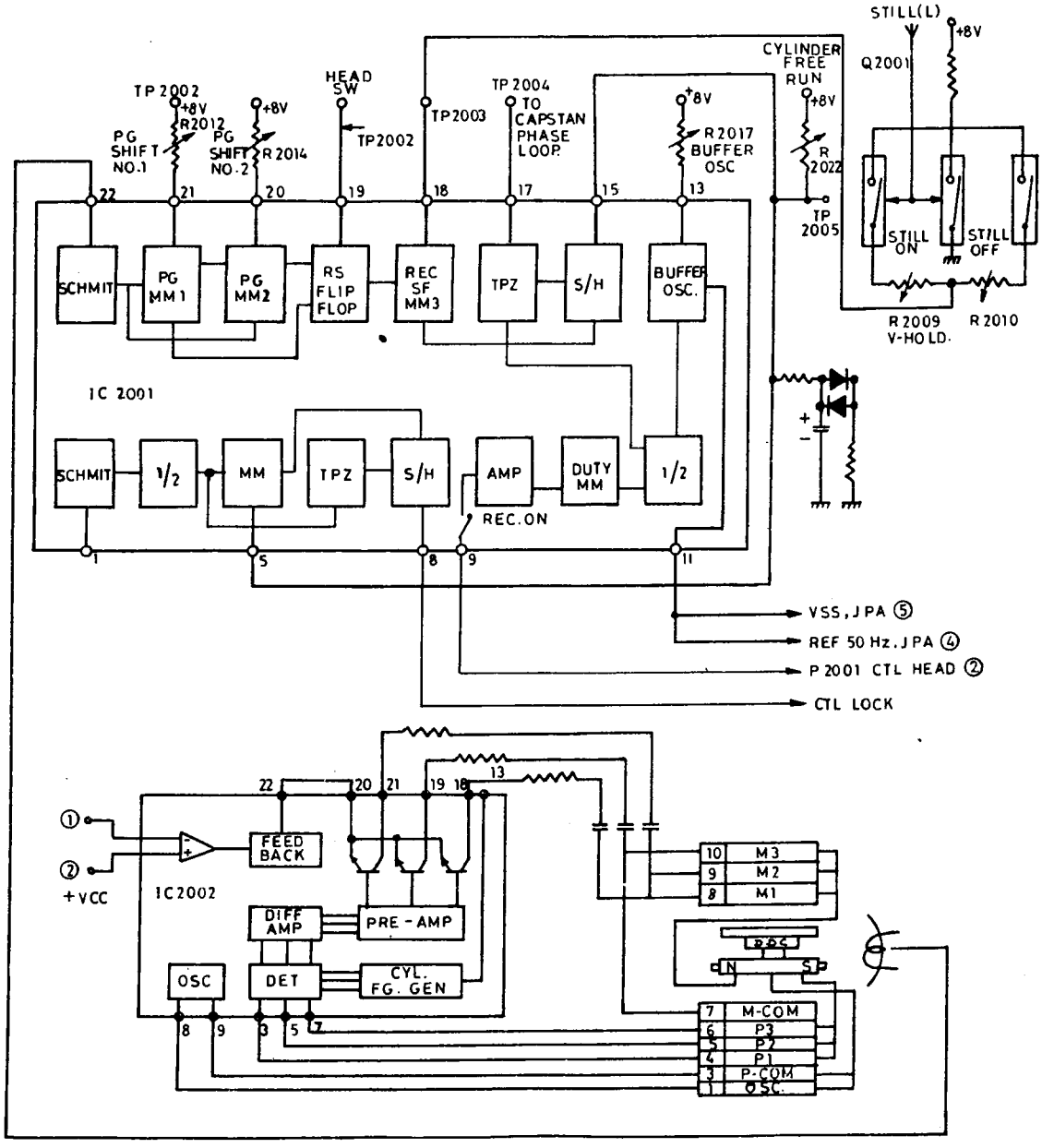

FIG. 6.4

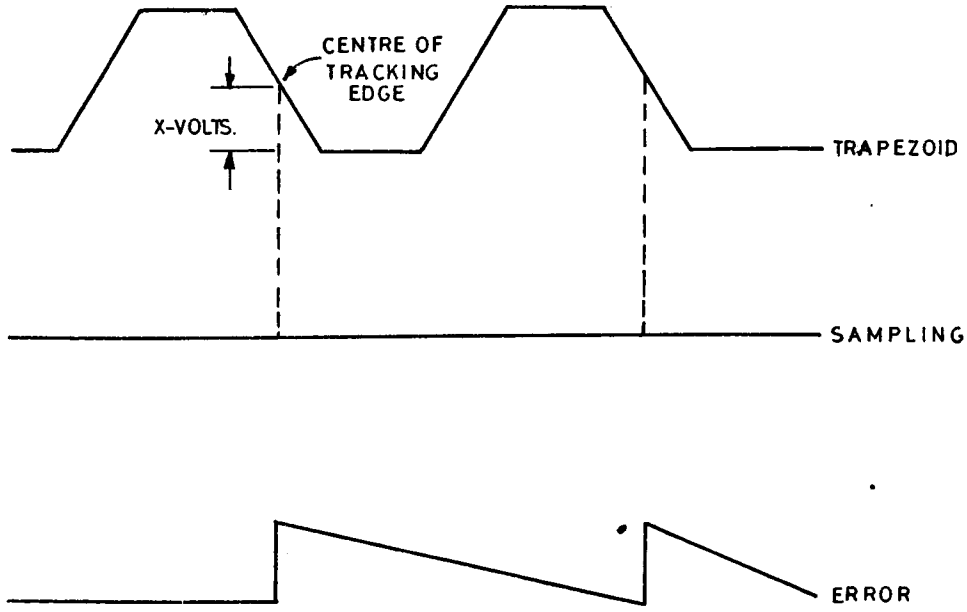

Fig. 6.5

If the cylinder motor speed increases, then the trapezoidal wave phase leads with respect to the sampling pulse as shown in Figure.

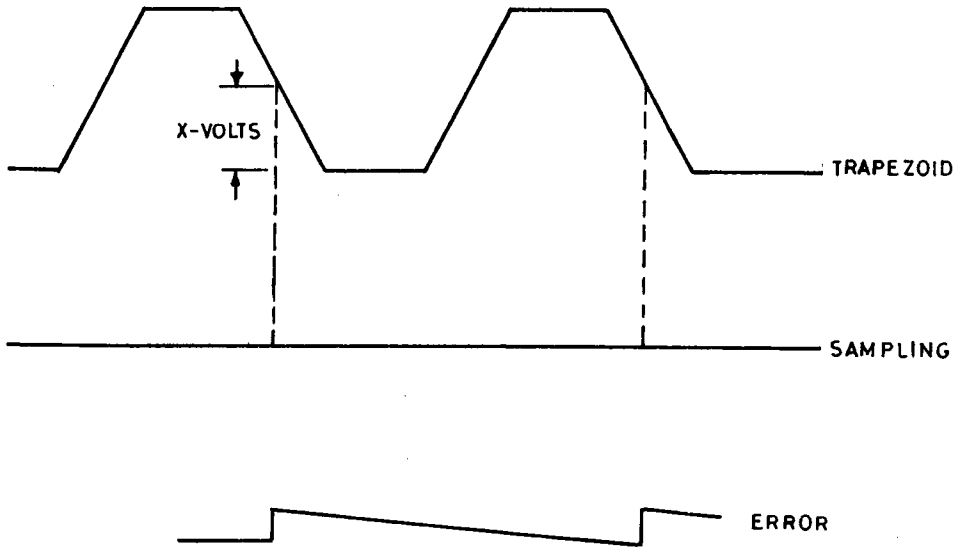

Fig. 6.6 Relationship of pulses when cylinder speed increases

The sampling position moves lower on the ramp, and the error voltage decreases, making the cylinder motor rotate at a lower speed. If the cylinder motor speed decreases, the trapezoidal wave lags behind the sampling pulse.

The sampling position moves higher on the ramp. As a result, the error voltage increases, making the cylinder rotate faster.

In summary, when the sampling pulse is used to sample the trapezoid ramp, a variable voltage results that is in direct relationship to the relative position of the sampling pulse on the ramp. Since this voltage represents video head position, the voltage can be used to control the cylinder motor phase. However, the phase control voltage developed by this circuit is limited to that which can be detected on the slope of the ramp and is used only as a vernier speed control (for phase control) voltage.

7

VHS CAPSTAN SERVO SYSTEM

1. ESSENTIAL FUNCTION OF CAPSTAN SERVO SYSTEM

The main function of the capstan servo system is to ensure the correct speed of the video tape in the S.P mode as well as in the L.P mode both during recording and playback.

In most of the VCRs, DC motors are used for running the capstan. In such cases, two servo systems are required to control the capstan motor. One is called the speed control system and the other is called the phase control system. The speed control system controls large speed variations to get constant speed. The phase control system controls small variations to achieve the specified tape speed.

2. OPERATING PRINCIPLES OF CAPSTAN SERVO SYSTEM

The basic operating principles of capstan servo system is given in Fig. 7.1

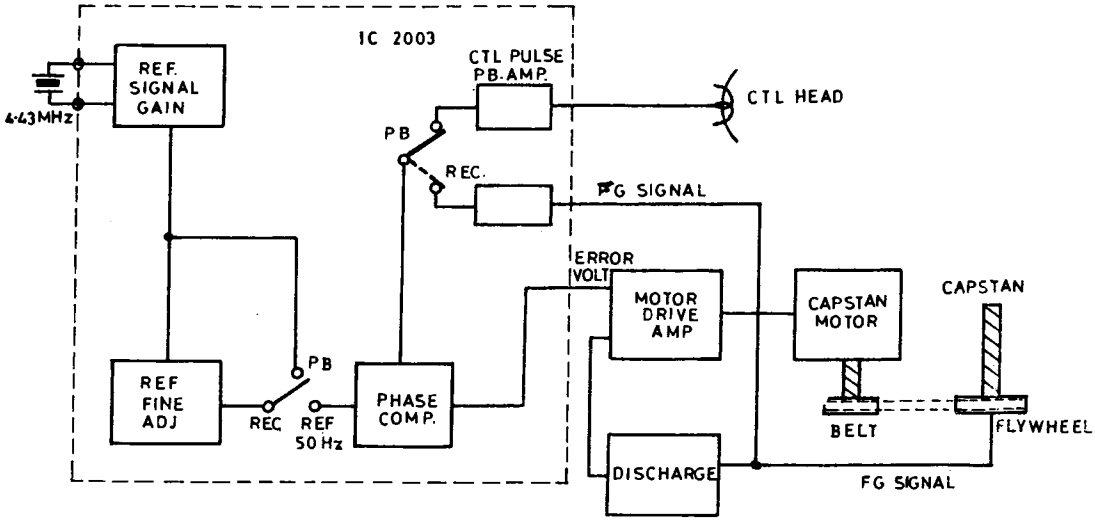

Fig. 7.1 Capstan servo system

Capstan Phase Control Circuit

The reference signal in the phase control system in the capstan servo is a crystal oscillator with a oscillator frequency of 4.43 MHz. This frequency is divided by 88672 divider and applied to the phase comparator as 50 Hz reference signal.

The other input of the phase comparator during record is the capstan FG signal which is fed via pin 1 of IC-2003 to a Schemit trigger circuit. The capstan FG signal is divided by divider circuits 1/N1 and 1/N2 and fed to monostable multivibrator MM through a Rec/Play changeover switch.

But during playback, the comparison signal is not capstan FG signals, but the control pulse recorded at the tape. The control head picks up this signal which is fed to pin 22 of IC-2003. This signal is then amplified by CTL amp-1 and CTL amp-2 and fed to the monostable multivibrator MM via Rec/Play changeover switch. The output of this MM circuit is fed to sample and hold circuit (S/H). The reference signal is also fed to this S/H circuit as a trapezoidal wave through pin 15 of IC-2003.

Now these two signals viz., the reference signal and cap FG signals are compared and an error voltage depending upon the phase difference between these two signals are generated in S/H circuit.

This error voltage is fed to capstan speed control circuit.

When this phase comparison control system is used alone, large frequency variations such as those during start up cannot be controlled. Consequently, a speed control system is required.

In this system, the frequency changes during start up or at times of large load changes are suppressed and the correct rotation speed is almost achieved.

Capstan Speed Control Circuit

In this control circuit, the phase control signal is compared with capstan FG signal. The capstan FG signal will be different for different mode say 720 Hz, for SP, 360 Hz for LP and 240 Hz for EP. This capstan FG signal is applied to a schemit trigger circuit via pin 1 of IC-2003. The output of this circuit is fed to a divider circuit (1/N1). The output of this divider circuit is further fed to a half-divider and then converted

into a trapezoidal wave. This wave is fed to sample and hold circuit for which the other input is phase control signal fed through a monostable multivibrator.

The S/H circuit compares both the signals and an error voltage is produced at pin 9 of IC-2003. This error voltage is fed to an amplifier Q-2004 and motor drive circuit consisting of Q-2006 and Q-2007.

Supposing the capstan rotates faster than the expected value, then the capstan FG signal is high and as a result, the error voltage developed will reduce the speed of the capstan. When the capstan speed is lower than the prescribed value, then error voltage increases capstan speed.

8

VHS SYSTEM CONTROL CIRCUIT

In VCRs, all operations are controlled by system control circuits. The basic operation of a VCR includes :

1. PLAY
2. RECORD
3. PAUSE OR FREEZE
4. DUBBING
5. STILL
6. FRAME ADVANCE
7. SLOW
8. QUICK
9. VIDEO SCANNING OR SEARCH
10. STOP
11. FFWD (FAST FORWARD)
12. REWIND

8.1 OPERATION MODE CONTROL

Let us examine the functions of mode button.

Whenever a particular mode operation button is pressed, then signal to indicate that particular mode is produced and also the drive mechanism such as loading, unloading, etc., is brought in operation. Until another button for a different mode is pressed, the VCR will continue to be in operation in the same mode except in certain circumstances such as tape sleek, tape end and so on.

1. Stop : As soon as STOP button is pressed,

(i) Unloading of tape is started and completed.
(ii) The capstan motor, cylinder motor and reel motor stop.
(iii) The main break is applied and
(iv) The Stop indicator is lit.

But when the STOP button is pressed during PLAY or REC mode, the unloading of tape continues till all the functions of stop mode are performed. However, the STOP indicator comes up before the start of unloading. When the power fails during certain operation, the VCR gets back to STOP mode.

2. Pause / Freeze / Freeze Frame

When the PAUSE button is pressed during PLAY or REC operation, the freeze frame appears on TV, but the VCR enters the corresponding PAUSE mode and also PAUSE indicator is lit.

3. Play

When the PLAY button is pressed, PLAY indicator is lit and the loading of tape is started. During PLAY operation, if the PAUSE button is pressed, then the VCR will go to STILL mode. Under this condition, if the FRAME ADVANCE button is pressed, then the picture will advance frame by frame.

During PLAY operation, if the SLOW button is pressed, then the capstan servo system is controlled to play at one-half speed. If the QUICK button is pressed, the capstan servo system is controlled to play at three times the normal speed. If the VIDEO SCANNING button is pressed during playback then the capstan servo system is controlled to play at 10 times the EP (Extended Play) speed.

If the VIDEO SCANNING button is pressed during playback, then the capstan servo system is controlled to play in the reverse direction at 10 times the EP speed. If the VCR is kept in this direction for more than 5 minutes, then the operation is automatically switched over to PLAY mode.

4. Record

The RECORD button is pressed along with the PLAY button. Immediately the IC generates recording voltage resulting in the operation of audio, video and servo circuits.

5. Rewind

When the REWIND button is pressed during playback, the supply reel motor rotates at 5 times the normal speed.

6. Fast Forward

When this button is pressed during playback, the loading motor rotates normally and a supply brake pressure is applied to the supply

reel to provide back-tension. The reel motor then turns, compressing the FF/REW idler against the take-up disk and the tape is taken up. The FFWD indicator is lit.

7. Auto Stop

The STOP button is pressed to stop the functioning of VCR. Further when there is a mechanical trouble and also when the tape runs to either end, then STOP mode comes into operation automatically.

ESSENTIAL FUNCTIONS OF SERVO SYSTEM

The essential functions of servo system are roughly classified as follows :

Auto shut off / Operation lever reset :

The servo system brings the VCR to STOP mode automatically whenever there is a mechanical trouble or the tape end is reached. The following summarizes the operation of the stop control circuits.

(i) End Sensor Circuit

The both ends of VHS tape are transparent for about 2 cms and when this portion of the tape passes through the end sensor lamp, either take-up photo-transistor or supply photo-transistor detects it optically. When these photo-transistors receive light, they produce voltage which in turn causes de-energisation of solenoid attached to take-up and supply motor. As a result, the VCR is stopped.

(ii) End Sensor Lamp Failure Detector

In case the end sensor lamp fails for any reason, then the VCR is placed in STOP mode. If this safety is not ensured, then the tape would break when it runs to its end.

For ensuring this, the sensor lamp is connected in parallel to a Zener diode and when this lamp fails, then the cathode voltage of Zener diode increases. This increase is applied to IC through an OR gate and places the VCR in STOP mode.

(iii) Dew Sensor Circuit

When dew forms inside the video deck, the tape will not move freely. Whenever the humidity exceeds 80 %, the VCR is to be stopped to avoid breakage or tangling of tape. The dew sensor detects this

condition. The resistance of dew sensor decreases when the humidity exceeds 80 % when this happens, the voltage at the junction of dew sensor increases. This increase, when applied to IC, puts the VCR in STOP mode.

(iv) Reel Lock Circuit

When the reel motor stops rotating, the VCR is brought to STOP mode in order to protect tape. The reel lock circuit detects the stoppage of reel motor except UNLOADING, LOADING, PAUSE, STOP, SLOW PLAYBACK modes.

When the reel motor rotates, the magnets attached to the reel counter pulley produces signals. This alternating signals are fed to an OR gate. When the reel motor stops, the OR gate does not get signal. This results in stoppage of VCR.

(v) Cylinder Lock Circuit

When the cylinder motor stops rotating or when rotation slows down below certain point, the cylinder lock circuit detects and brings VCR to STOP mode.

(vi) Cassette Holder Trouble Detection

This circuit detects any trouble in cassette holder. If the cassette holder is in the eject condition, then this circuit brings the VCR to STOP mode.

MEMORY COUNTER CIRCUIT

In VCRs, memory circuit is provided to locate a particular programme in the tape. For this, a memory counter is incorporated and this counter displays a number that increases as the tape moves forward and decreases as the tape moves backward.

When we want to locate a particular programme on the tape, then we have to stop the tape at that particular point and set the counter reading to " 000 ". Then to detect that point after running the tape, we must set the counter switch to memory position.

Now when the REWIND button is pressed, the tape will move backward till counter reads " 000 ". At this particular point the VCR goes to STOP mode.

CUEING CIRCUIT

Cueing is done both during play and record functions. The cueing signal is recorded on the tape and for this, 25 Hz signal is superimposed on the full erase bias signal.

This cueing signal is picked up by the cueing head attached to the tape tension arm when the cue/memory switch is set to cue and the VCR is on FAST FORWARD or REWIND mode. At this time, the 25 Hz switching signal is detected causing VCR to go to STOP mode. If several programmes have been recorded on tape with the RECORD button pressed at the beginning of each programme, the VCR will stop at each programme during forward or rewind position.

LOADING MOTOR/REEL MOTOR CONTROL

As discussed earlier, loading motor and reel motor start functioning in PLAY, RECORD, FAST FORWARD & REWIND modes.

As soon as the press button switches are pressed, the control IC sends signals to loading and reel motors. This control IC is capable of giving instructions and they are :

1. The reel motor receives a

   (a) fast forward control
   (b) rewind control and
   (c) slow-speed forward control

2. The loading motor receives a

   (a) loading control
   (b) unloading control and
   (c) brake control

9

TYPICAL VHS MECHANICAL OPERATION

In all VCRs, the mechanical operation is mainly related to tape transport mechanism, safety devices, loading/unloading, play, record, still, pause, audio dubbing, fast forward, forward search, rewind, auto rewind, eject, tape counter memory and timer record modes. Based on the selection of a particular mode, the system control circuit gives the command signals to the mechanical system and therefore these two systems are closely linked to each other.

By studying the mechanical operations discussed here, you can easily understand the mechanical operation of any VCR. For localizing the fault and servicing, the understanding of this section is essential, as the faults are either in electronic or mechanical section or in both. The VCR manual supplied by the manufacturers gives the details of the mechanical operation either by photos/drawings along with the descriptions of all parts for each mode or by use of timing chart alongwith rotation drawings.

Let us see a few functions of mechanical operation.

9.1 TAPE LOADING

The VHS tape is not loaded automatically as soon as the cassette compartment lid is closed, but only when the PLAY button is pressed, it starts loading. The threading of tape is like the letter ' M ' and hence it is called M-loading. When the cassette is put in its place, two guide rollers, a tape tension arm and the capstan are positioned behind the tape i.e., between the tape and the reels. The capstan is now stationary and the two guide rollers are attached to movable arms which are pivoted below the video head scanners. The tape tension arm is spring loaded and pivots near the supply reel. For details, please see fig.9. 1(A&B)

As shown in fig. 9. 1(B), as soon as the PLAY button is pressed, the tape is pulled against capstan as well as against the video, audio/ control and erase heads by the two guide rollers, which are activated by the arms. The pinch roller is also pulled against the tape. Generally

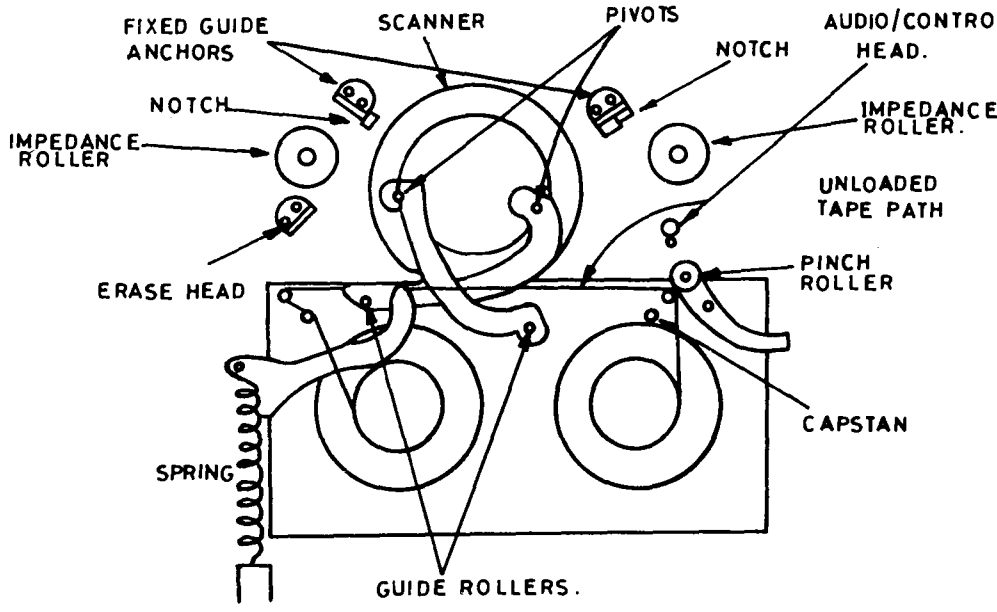

Fig. 9.1. (a). VHS tape loading system

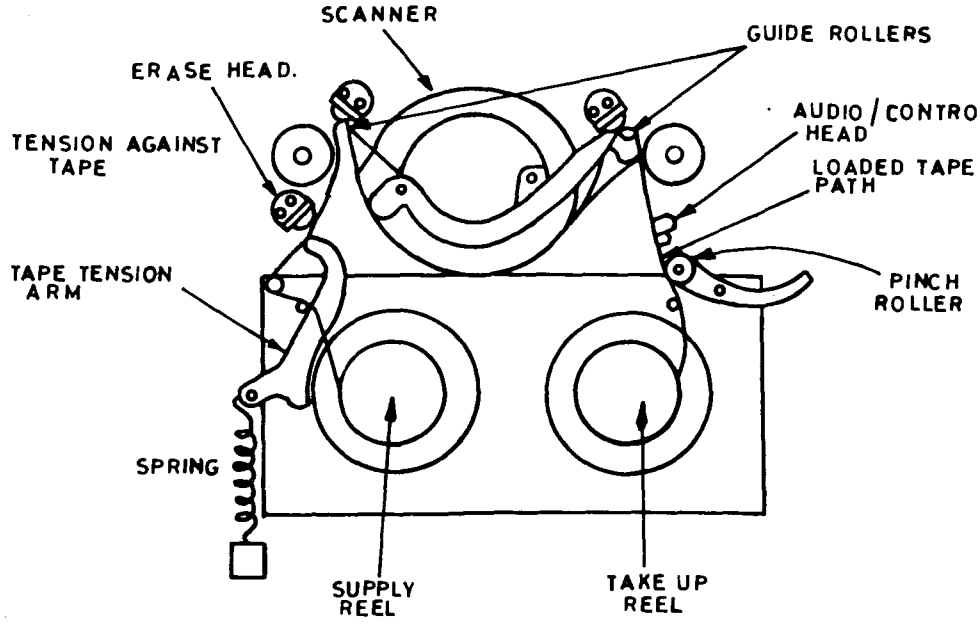

Fig. 9.1. (b). VHS tape loading system

the arms and the pinch rollers are operated by a gear system attached to the capstan motor. The movable arms, when fully extended, press the guide pins into notches provided on fixed guide anchors. These guide anchors are positioned with considerable accuracy, as the guide pins and rollers are to provide the accurate path for the tape against the scanner.

When the tape threading is complete, the tape tension arm is actuated to apply spring-loaded tension against the tape with the tension arm in place, the tape begins to move, the arms are locked in place and the arm gear system is disengaged from the capstan motor.

Unthreading of the VHS tape is initiated as soon as the STOP button is pressed. The STOP button interrupts both PLAY & RECORD functions. When the STOP mode is pressed, the arms, pinch roller and the tape tension are returned to their normal position. With the tape, back in the cassette, FAST FORWARD & REWIND functions can be performed by pressing the corresponding buttons.

9.2 REWIND OPERATION

To understand the timing chart and rotation drawing method given in some VCR manuals, let us see the REWIND operation by this method.

The VCR manual gives the physical location of the parts by photos and these are numbered.

To understand the timing and rotation for a particular mode of operation, read the timing blocks in sequence from left to right.

In case of rewind mode, as soon as the REWIND button is pressed, the first two functions are :

Solenoid for the main brake is OFF and the main brakes are off. In the next sequence reel motor begins to rotate, the Fast Forward Idler contacts with the supply reel table and the supply reel table begins to rotate anti clock-wise. The rewind mode ends when the tape has been fully wound on the supply reel.

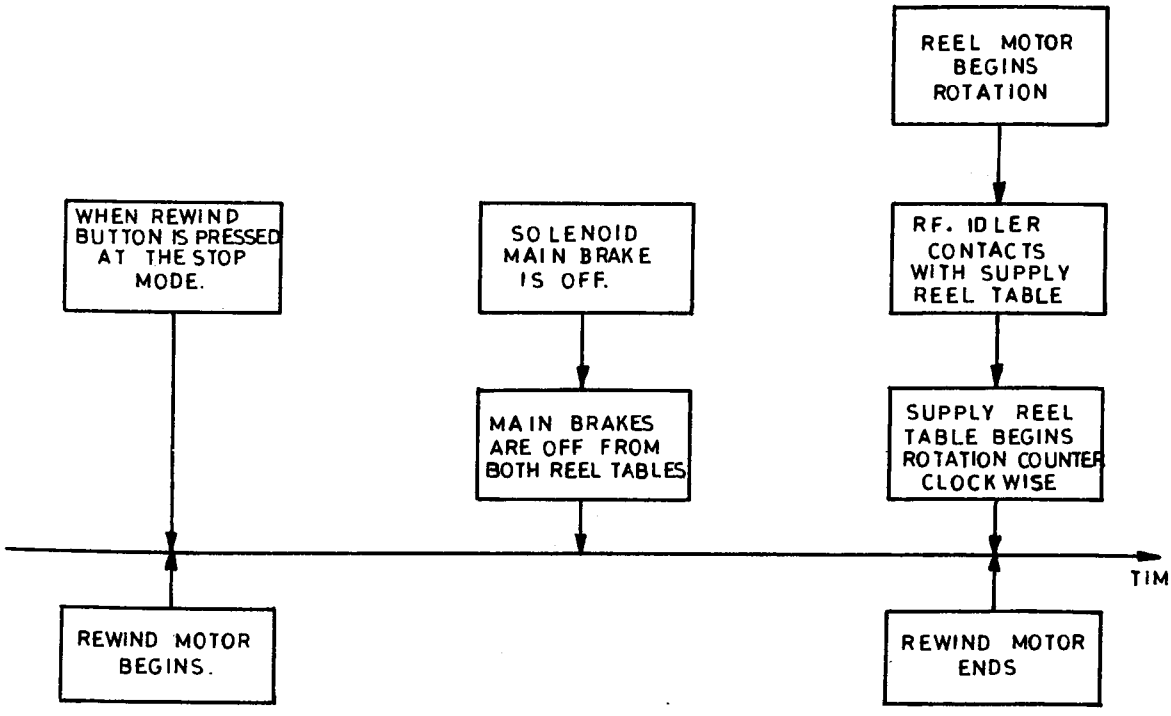

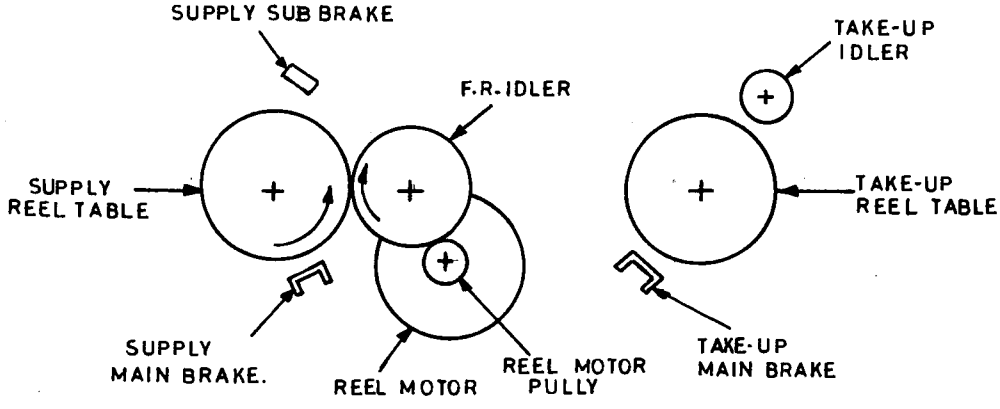

Fig. 9.2 Timing chart and rotation drawing for VHS REWIND mode

9.3. OPERATION IN THE PLAY MODE

When the PLAY button is pressed, the head motor, capstan motor and reel motor are running and the pinch roller solenoid is attracted. The rotation of the capstan motor is transmitted to the flywheel by the belt and the tape is transported with constant speed by the capstan and the pinch roller.

The rotation of the reel motor is transmitted to the forward pulley by a belt and the forward gear, installed as one unit with forward pulley, turns the take-up reel base in the clock-wise direction. This causes the tape, passing through capstan and pinch roller, to be taken up in the take-up reel.

In the forward gear system, intermediate pulley is used. And this pulley has a built-in slip mechanism which controls the rotation force of the reel motor. Now the tape is taken up with a tension force that does not damage the tape.

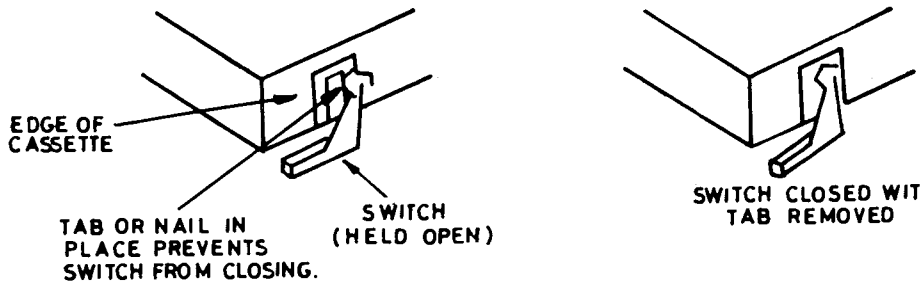

Fig. 9.3 Typical record lock out or malerase function

9.4 OPERATION OF RECORD MODE

The mechanical operation of the RECORD mode is the same as that of PLAY mode. However the electrical operations are different.

Sometimes, you would like to retain a particular programme in a cassette while recording. This is called "RECORD LOCKOUT" or "MALERASE'. For this a tab is located at the bottom of the cassette as shown in fig. 9.3.

This tab prevents a switch from closing, that means, the record operation is disabled.

10

CLEANING, LUBRICATION AND MAINTENANCE PROCEDURE

The maintenance of the VCR is very important for trouble-free and good performance. The maintenance schedule includes cleaning, lubrication and check-up of certain electrical and mechanical adjustments periodically.

The manufacturer of VCR generally supplies VCR service manual which contains various maintenance procedures. For servicing any VCR, first you go through the service manual of that particular model. In the absence of manufacturer's instructions, you can follow the instructions given here, as these instructions are based on different VCRs. Using these examples given here, you will be able to relate the procedure to a similar set of adjustment points on most VCRs.

10.1 ALIGNMENT TOOLS

For servicing and aligning any VCR, special tools recommended by the manufacturer for that particular VCR should be invariably used. The list of tools recommended for VCRs are as follows:-

1. VHS alignment tape
2. Post alignment plate
3. Cassette holder fixture
4. Back tension meter
5. Retaining Ring remover 3mm
6. Retaining Ring remover 4mm
7. H-portion Adjustment Fixture
8. Dial torque gauge with adaptor
9. Hexagonal wrench 0.9mm, 1.25mm, 1.5mm
10. Reel table height jig
11. Eccentric screw driver
12. Head tester
13. Fan type tension gauge

14. Fine adjustment screw driver
15. Cleaning cassette tape
16. Capstan reference plate
17. Post adjustment screw driver
18. Tension Post adjustment fixture
19. Head cleaning stick.

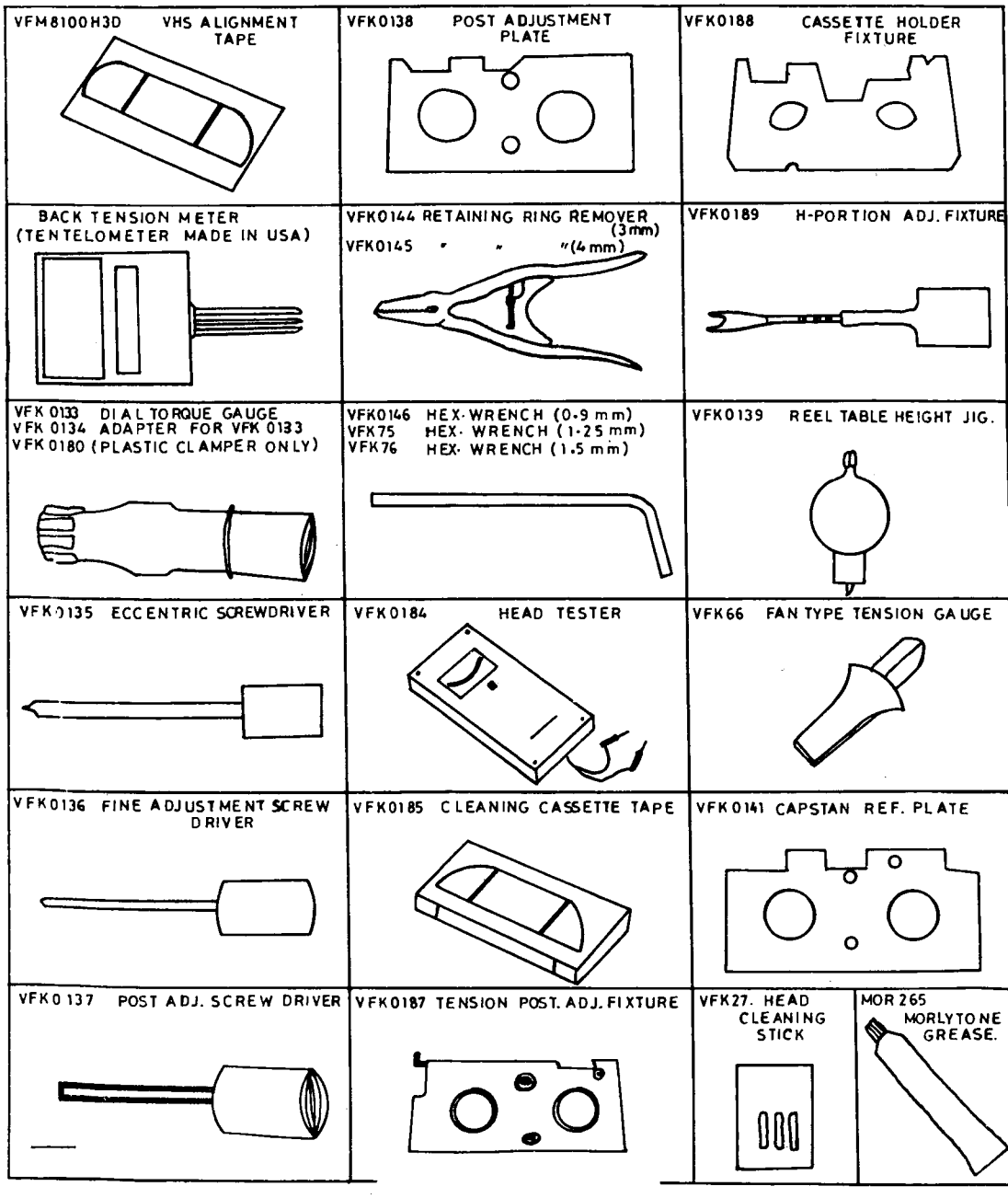

10.2. Cleaners, Lubricating oils and maintenance time-tables

Never lubricate or clean any part not recommended by manufacturer because most of the VCRs use sealed bearing that do not require lubrication. A drop of oil in the wrong place can cause damage. Always clean the excess or spilled oil, after lubrication. In the absence of specific recommendation, use a light machine oil such as sewing machine oil. Note that only the supply reel, take-up reel, fast forward roller, clutch pulley and rewind idler require lubrication. Most of the VCR manufacturers recommend alcohol and cleaning sticks for all cleaning. Use Methyl alcohol for cleaning, but with great care, as it can be a health hazard. But isoprophyl alcohol is recommended for satisfactory cleaning.

The maintenance schedule for cleaning/lubricating is given below :

TABLE 10.1

NAME OF THE COMPONENTS	OPERATING HOURS (X 100)								
	5	10	15	20	25	30	35	40	50
1. Video Heads	C	C	C	C	C	C	C	C	C
2. Audio/Control Head	C	C	C	C	C	C	C	C	C
3. Pinch Roller	C	C	C	C	C	C	C	C	C
4. Erase Head	C	C	C	C	C	C	C	C	C
5. Supply Reel				CL				CL	
6. Take-up Reel				CL				CL	
7. Fast Forward Roller		L		CL		CL		CL	CL
8. Clutch Pulley				L		L		L	L
9. Rewind Idler		L		CL		CL		CL	L
10. Fast Forward Roller		C		C		C		C	C
11. Capstan Assembly		C		C		C		C	C
12. Loading Gear		CL		CL		CL		CL	CL

C = Cleaning L = Lubrication CL = Cleaning/Lubrication

Now let us see the procedure to be followed in disassembling and assembling various mechanical parts of VCR for cleaning and lubricating purpose.

10.3 VIDEO HEAD CLEANING

The quite popular method of Video head cleaning is by using cleaning cassettes recommended by many VCR manufacturers because it is easy and without much efforts.

The cleaning cassettes are of two types. One is by use of solvent wherein the debris is dissolved by the solvent and carried away by the cassette as the cassette passes over the video heads. The second type is of abrasive type in which the debris on the video heads is scraped away by the cassette tape. But you should be careful if you are using this tape, because the exposure of video heads for more period than the recommended period will damage the video heads. Generally about 10 to 20 secs. are recommended as exposure time.

10.4 AUDIO/CONTROL AND ERASE HEAD CLEANING

Moisten the cleaner stick with alcohol and gently press the stick against each head surface. Clean the heads by moving the cleaner stick horizontally as shown in fig 10.2. Do not move the stick vertically.

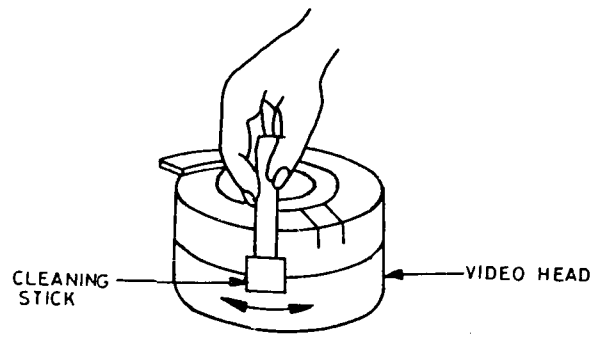

Fig. 10.2. (a). Video head cleaning

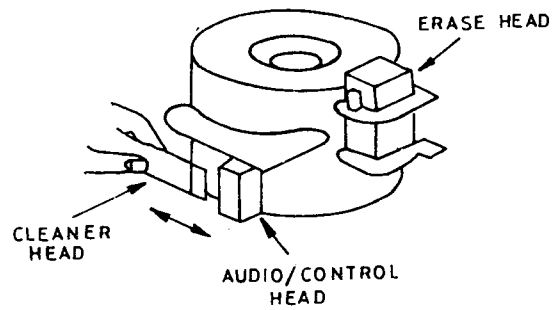

Fig. 10.2. (b). Audio/control and erase head cleaning

10.5 PINCH ROLLER CLEANING

1. Moist a soft cloth with alcohol.
2. Gently wipe off the surface of the pinch roller
3. In case scratches or any other damage are found on the pinch roller, then replace the pinch roller by a new one. For this, remove the screw which is holding the pinch roller and then replace it.

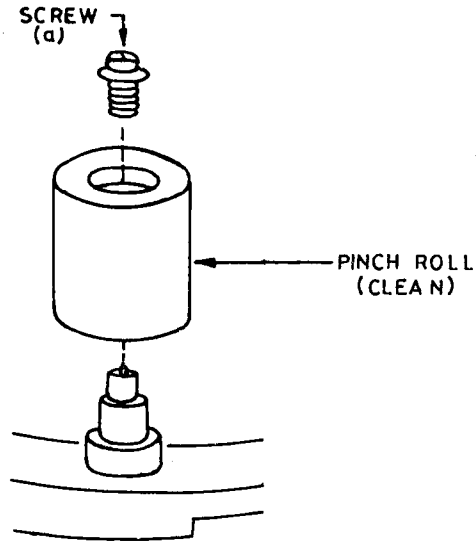

Fig. 10.3. Pinch roller cleaning

10.6 TAPE PATH CLEANING

1. Use a soft cloth moistened in alcohol for cleaning the tape path.
2. The drum surface and surface of tape guides are to be cleaned carefully.
3. Do not touch the video heads with soft cloth while cleaning
4. Rotate the video head disk by hand to move the head away from the spot to be cleaned

10.7 SUPPLY REEL CLEANING AND LUBRICATION

1. Remove the cassette holder assembly
2. Remove screw (a) which fixes the brake band and move the brake band from the supply reel as shown in fig. 10.4.
3. Remove the screw (b) which fixes the supply reel and detach

the supply reel. Do not bend the brake band for any reason. In VCRs where the spacers are provided under the bottom of the supply reel for height adjustment, ensure that same numbers of spacers are provided at the time of assembling.

4. Use a soft cloth moistened with alcohol for careful cleaning off the old oil adhering to the reel shaft and then apply one or two drops of new oil to the reel shaft.
5. Replace the supply reel when installing the supply reel, be careful not to bend the brake band.
6. Adjust the height of the reel, if a new supply reel is used, as per procedure described for this.
7. Adjust the back-tension lever position for optimum back-tension of 35 to 45 gm/cm, as per the procedure prescribed in the next chapter.

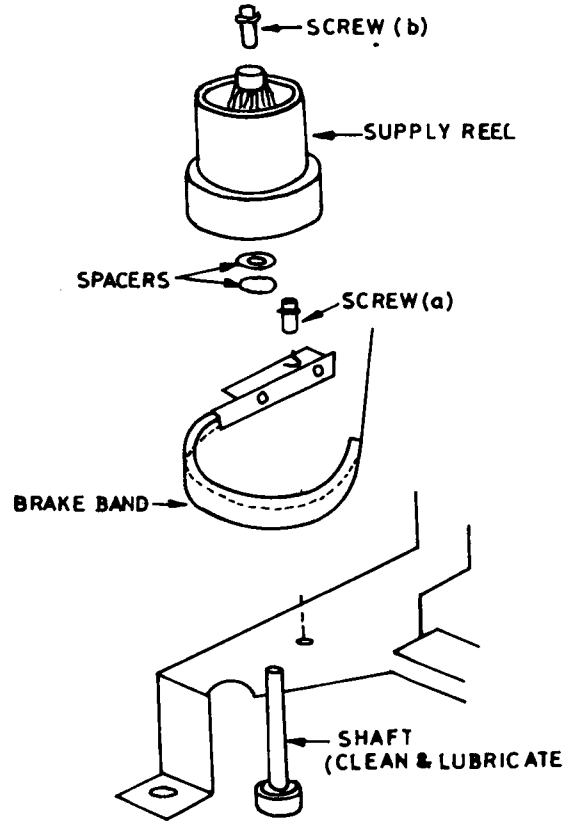

Fig. 10.4. Supply reel cleaning and lubrication

10.8 TAKE-UP REEL CLEANING AND LUBRICATION

1. Remove the cassette holder assembly.
2. Remove the counter belt.
3. Remove the take-up reel by unfastening screws as shown in fig. 10.5. If the spacers are used for height adjustment under the bottom of the supply reel, then make note of the number of spacers used.
4. Clean off the old oil sticking to the reel shaft with a soft cloth moistened with alcohol and apply a few drops of new oil to the reel shaft.
5. Replace the take-up reel.
6. Adjust the height of the reel if a new take-up reel is used.
7. Carefully put back the counter belt and see that there is no twist in the belt.
8. Put back the cassette holder assembly and the cassette holder.

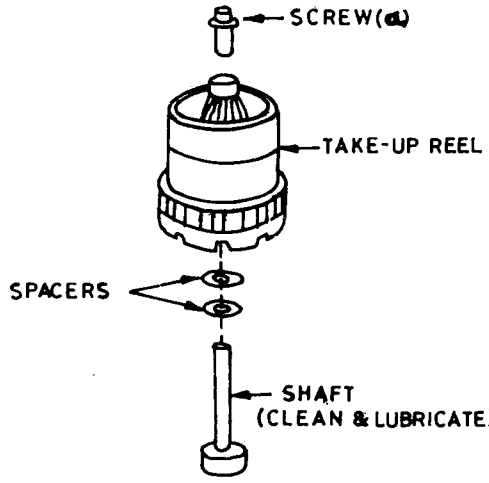

Fig. 10.5 Take-up reel cleaning and lubrication

10.9 FAST-FORWARD ROLLER CLEANING AND LUBRICATION

1. Remove the cassette holder
2. Keep the VCR in upright position
3. Disengage the reel belt (b) from the fast-forward pulley as shown in fig 10.6

4. With a hexagonal wrench carefully remove the screws (a) and then remove the fast-forward pulley.
5. With a soft cloth moistened in alcohol, clean the groove of the pulley.
6. Pull up the fast-forward roller gently in the upward direction.
7. Clean the outer surface of the roller with a soft cloth moistened in alcohol.
8. Clean off the old oil sticking to the roller shaft with a cloth moistened in alcohol and put few drops of new oil to the roller shaft. Be careful not to damage the geared portion of the roller which is made of plastic
9. Refit the components in its position in the same order of disassembly

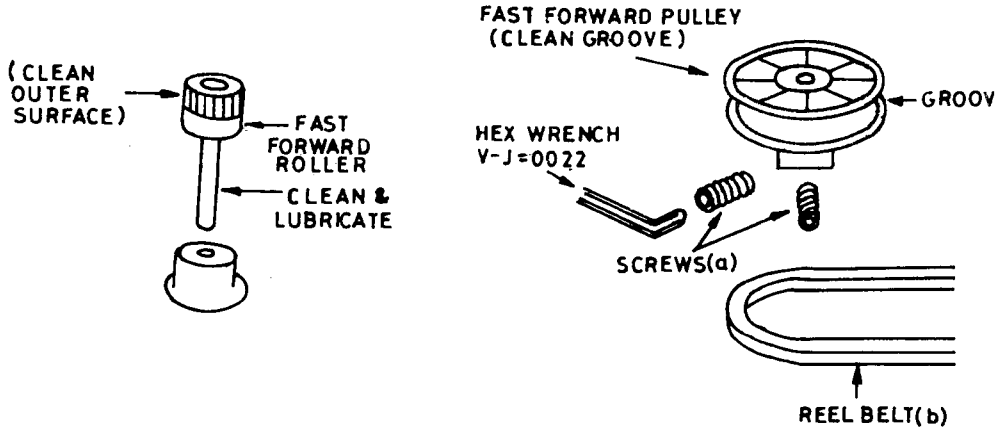

Fig. 10.6 Fast forward roller cleaning and lubrication

10.10 CLUTCH PULLEY CLEANING AND LUBRICATION

1. Remove the E-ring and polyslider from the clutch pulley as shown in fig. 10.7
2. Keep the VCR in upright position
3. Disconnect the reel belt A and reel belt B from the clutch pulley
4. Gently pull the clutch pulley down-wards. Be careful not to lose the polyslider while doing this
5. With a soft cloth moistened in alcohol clean each groove of the pulley
6. Also clean off the old oil sticking to the pulley shaft and apply few drops of new oil to the shaft.

7. Now insert the clutch pulley shaft into the bracket with the help of C-shaped portion of the clutch actuating lever. And also put back the belts A & B with the pulley ensuring that there is no twist in the belt.
8. Fit polyslider onto the shaft and put E-ring. Apply a drop of oil to the area where E-ring is seated.

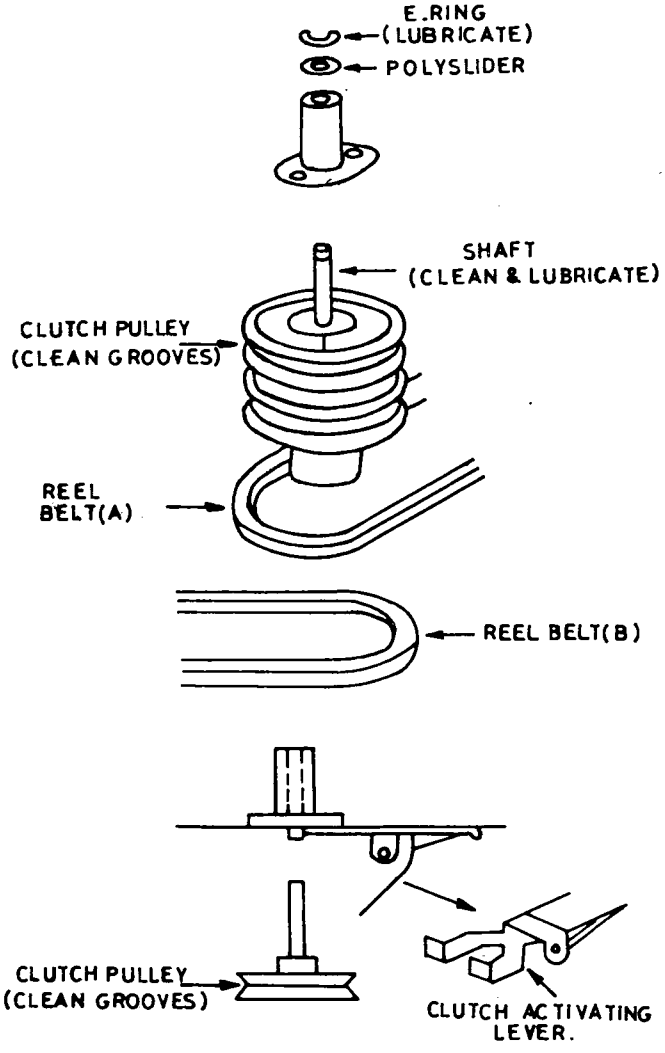

Fig. 10.7 Clutch pulley cleaning and lubrication

10.11 REWIND IDLER CLEANING AND LUBRICATION

1. Remove the cassette holder assembly
2. Unfasten screw (a) to remove the loading ring stopper as shown in fig. 10.8

3. Remove the E-ring before removal of the rewind idler
4. With a soft cloth moistened with alcohol, clean the outer surface of the idler, remove the old oil sticking to the idler shaft and apply two or three drops of lubricating oil to the shaft
5. Reassemble the components in the reverse order in order to get the original assembly

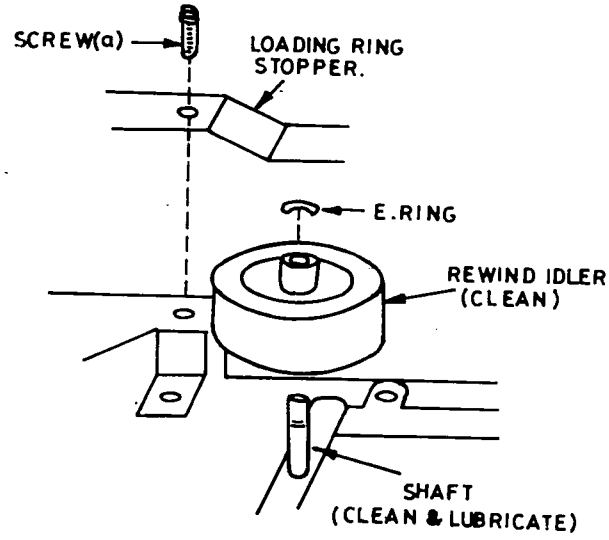

Fig. 10.8 Rewind idler cleaning and lubrication

10.12 CAPSTAN ASSEMBLY CLEANING

1. Keep the VCR in upright position
2. Remove capstan belt
3. Remove the three screws (a) with a screw driver inserted through the corresponding hole found on the capstan fly wheel as shown in fig 10.9
4. Rotate the bearing flange clock-wise by about 5x to pull off the capstan assembly
5. Clean the spindle and the periphery of the capstan fly wheel with a soft cloth soaked with alcohol.
6. Reassemble the components in the reverse order and put back the capstan assembly in position.

10.13 LOADING GEAR CLEANING & LUBRICATION

1. Keep the VCR in upright position
2. Remove the capstan motor assembly
3. Remove the two screws (a) to remove the loading gear assembly as shown in fig. 10.10

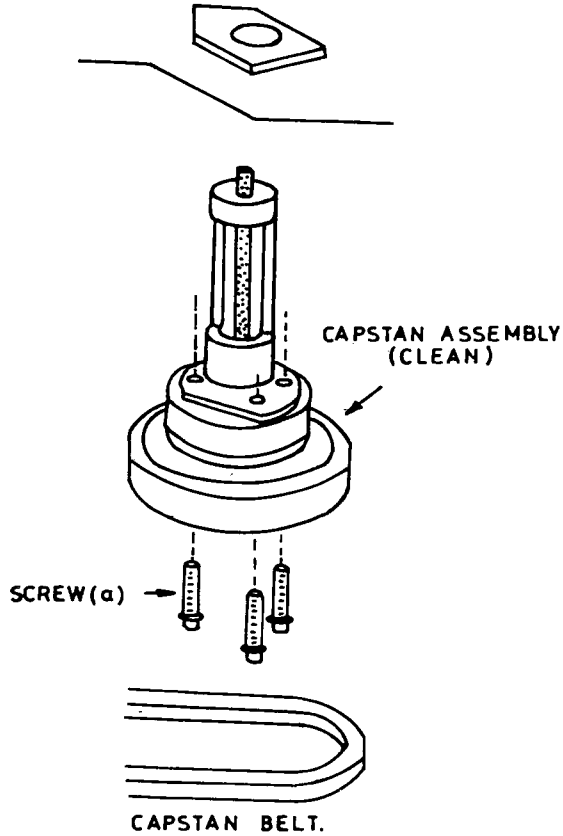

Fig. 10.9 Capstan assembly cleaning

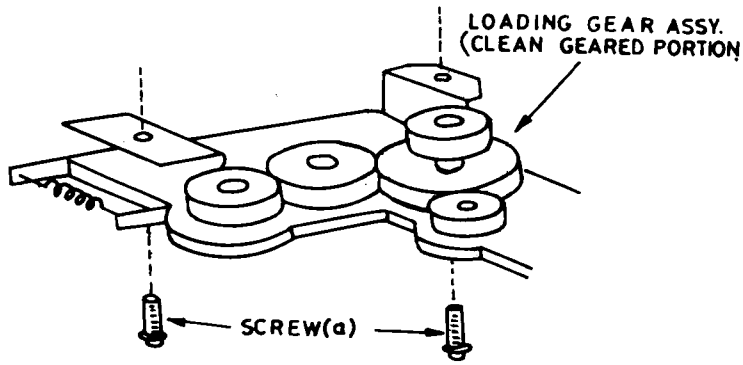

Fig. 10.10

4. With a soft cloth moistened in alcohol, clean the geared portion of the loading gear assembly.
5. Re-assemble the components in the reverse direction
6. Now make sure that the teeth of the loading gear assembly are correctly engaged with the teeth of the loading ring.

10.14 LOADING RING SUPPORT ROLLER CLEANING & LUBRICATION

1. Remove the cassette holder assembly
2. Remove the screw (a) to detach the loading ring stopper as shown in fig. 10.11
3. Remove the screw (b) to detach the roller location bracket.

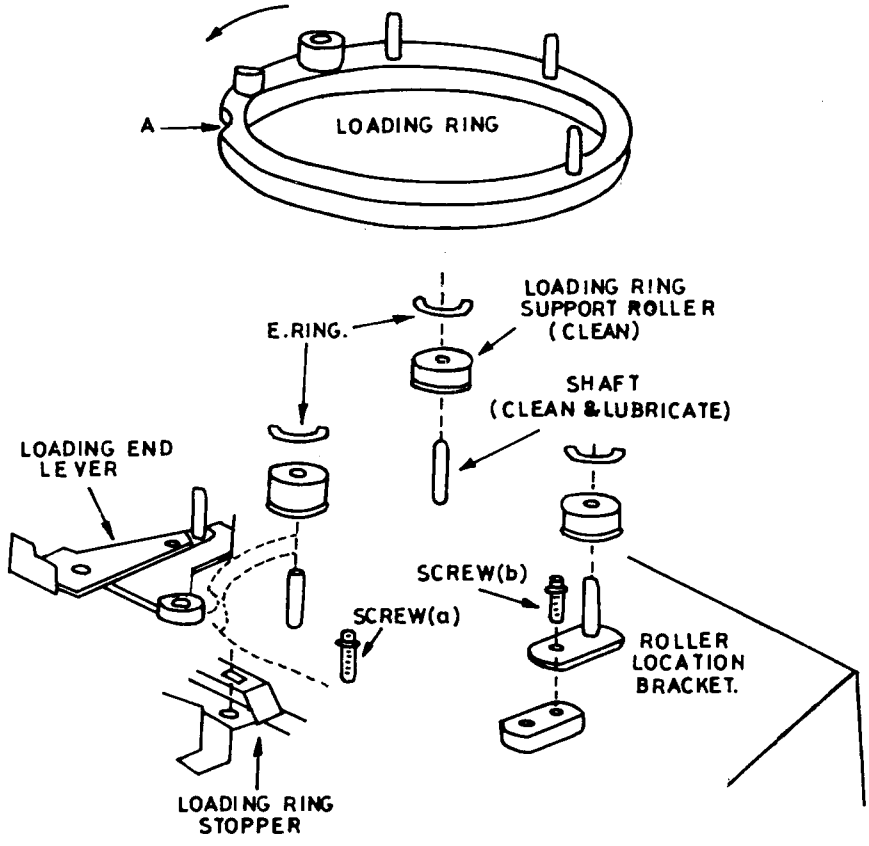

Fig. 10.11

4. Rotate the loading ring anti-clockwise by hand until the concave portion, indicated as A in the drawing of the loading ring faces the pinch roller pressing lever as shown in fig. 10.11
5. Push the loading end lever in the arrow direction and raise the loading ring. Carefully place the loading ring on a smooth, flat surface.
6. Remove the three loading ring support rollers by removing each corresponding E-ring.

7. Clean the inner surface of each loading ring support roller and each corresponding shaft, with a soft cloth soaked in alcohol. Now lubricate each shaft with one or two drops of oil.
8. Re-assemble the components in the reverse order
9. While re-assembling, make sure that the concave portion of the bracket faces the concave portion of the drum base before tightening the screw.

11

VCR ELECTRICAL ADJUSTMENTS

The electrical adjustments are required to be done to ensure that the mechanical parts are actuated properly. The VCR service manual generally provides the procedure for electrical adjustments. The principles of adjustments are the same for all VCRs. However, in this section, we have taken National VCR for our discussion. The service engineers must go through the procedure carefully and follow it.

11.1. ELECTRICAL / ELECTRONIC TEST EQUIPMENTS

For doing electrical adjustments, the following test equipments are necessary :

1. Digital voltmeter (DVM) or VTVM (Vaccum Tube Voltmeter) Voltage Range : 0.001 to 50 V
2. Oscilloscope dual trace voltage range : 0.005 to 50V/Div. Frequency Range : 0 to 10 MHz. Probes : 10:1 or 1:1
3. Digital frequency counter. Frequency Range : 0 to 10MHz
4. Signal Generator (Sine wave):Frequency Range : 0 to 10MHz
5. Video Sweep Generator : Frequency Range : 0 to 10MHz
6. Colour TV Receiver
7. Plastic tip driver
8. VHS alignment tape.

First, you must familiarise with the test equipments. For this, you must read and understand the pamphlets pertaining to these equipments. These equipments require only a certain level of input signals and any excess level may spoil the equipments.

Let us now see the various adjustments to be done.

11.2. POWER SUPPLY ADJUSTMENTS

The purpose of this adjustment is to set the voltage of the servo system power supply to +9V.

1. Connect DVM or VTVM to the test point of the power supply section. Here it is pin 4 of IC-1001
2. Switch on the VCR
3. Read the dc voltage and it must be 9.3 ± 0.1 V dc.

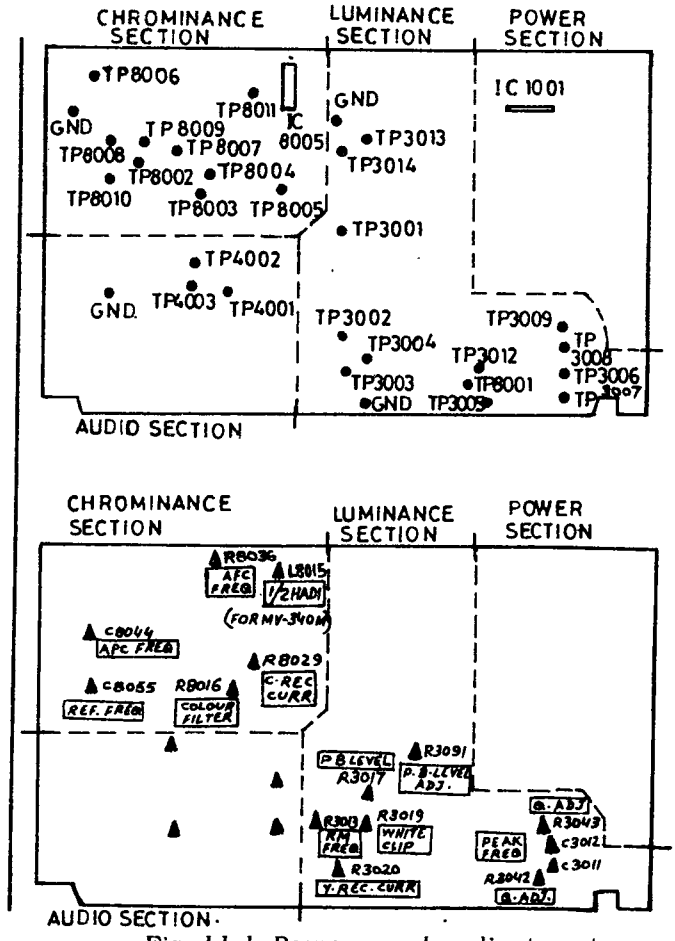

Fig. 11.1 Power supply adjustment

11.3. BUFFER OSCILLATOR FREQUENCY ADJUSTMENT

Since the buffer oscillator provides reference signal to the capstan phase loop, it should be adjusted first. For this,

1. Connect the oscilloscope to TP 2001 on the servo section.(Fig.11.2)
2. Do not supply any video signal to the video input terminal
3. Operate the VCR in Record/Play Mode
4. Adjust the oscillator frequency control R 2017 in the servo section so that the period 'T' becomes 20 mSecs

5. Now, supply a video signal from the colour bar generator to the VIDEO INPUT
6. Check up whether the period 'T' is 20 mSecs. (Fig. 11.3).

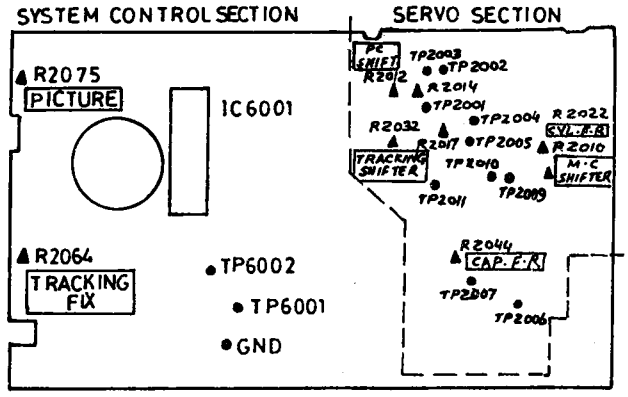

Fig. 11.2

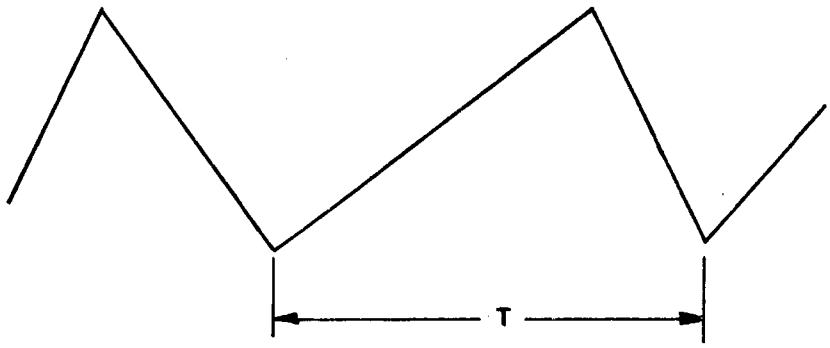

CRO SETTING 5V/5 m. sec/DIV.

Fig. 11.3

11.4. CAPSTAN SPEED ADJUSTMENT

The purpose of this adjustment is to ensure that the tape speed is approximately 23.39 mm/sec in the SP mode.

1. Connect the colour bar generator to the video input of the servo system PC board as shown in fig. 11.4
2. Also connect the oscilloscope CH 1 to TP 2009 and CH 2 to TP 2010 on the servo section as shown in figure
3. Insert a blank cassette tape and record a colour bar signal. In case you do not have colour bar generator, you can tune to local TV station

4. Now adjust the capstan speed control R-2044 in the servo section so that the sample pulse is locked on the trapezoidal wave form, or the sample pulse flows as slowly as possible on the trapezoidal wave form as shown in fig. 11.4
5. Since all the speeds are to be adjusted, now connect the DVM to TP 2011 on the servo section
6. Adjust the capstan speed control R-2044 slowly so that the DVM indicates 4.1 ± 0.1 VDC.
7. Also you must ensure that the sample pulse is phase locked with the trapezoidal wave form.

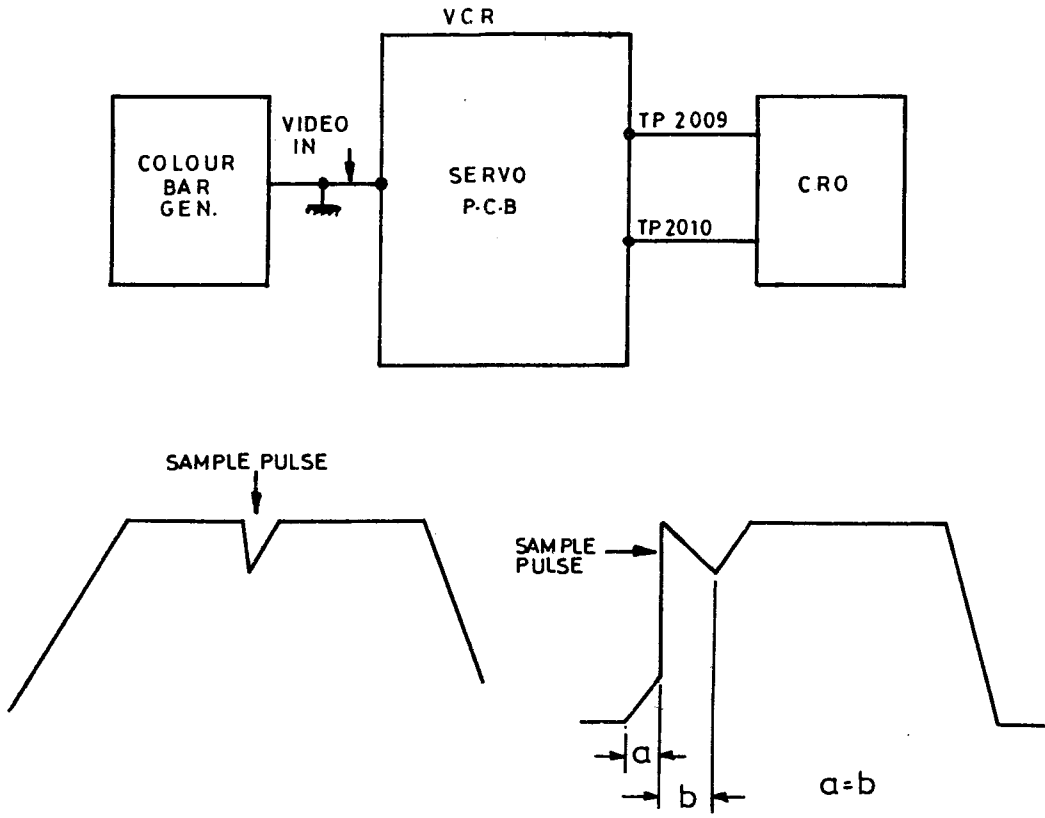

Fig. 11.4 Capstan speed adjustment and waveforms

11.5. CYLINDER SPEED ADJUSTMENTS

The purpose of this adjustment is to ensure that the cylinder speed is 1500 rpm.

1. Connect a colour bar generator to the VIDEO INPUT or tune to a local TV station

2. Connect the oscilloscope CH1 to TP 2003 and CH2 to TP 2004 on the servo section
3. Operate the VCR in REC/PLAY mode
4. Adjust R-2035 in the servo section so that both the wave forms, i.e., the head switching pulse and trapezoidal wave form are phase-locked or the sample pulse flows as slowly as possible on the trapezoidal wave form as shown in fig. 11.4
5. Now connect the DVM to TP 2005 on the servo section
6. Now adjust the cylinder free control R-2022 so that the DVM reads 3.8 ± 0.1 VDC
7. Also make sure that the above wave forms are phase-locked.

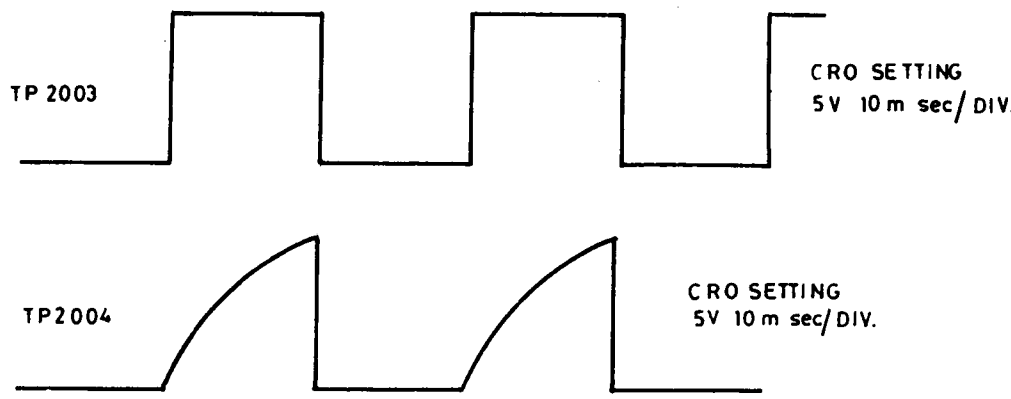

Fig. 11.5

11.6 PULSE GENERATOR SHIFTER ADJUSTMENT

This adjustment is to ensure that two video heads are switched on at the correct time. That is, the video head switching occurs 6.5 Horizontal lines (6.5 H) before the start of the vertical sync. pulse or three lines before the start of the equalizing pulse as shown in fig. 11.6 & 11.7.

1. Connect the oscilloscope CH 1 to TP 3013 on the video section and CH 2 to TP 2002 on the servo section
2. Play back the alignment tape
3. Now adjust the PG shift control R 2012 on the servo section so that the falling edge of switching pulse is 6 ± 0.5 H before the beginning of the V-sync as shown in fig. 11.6.
4. Change the slope selector on the scope front '+' to '-' and adjust the PG shift control R 2014 on the same section so that the

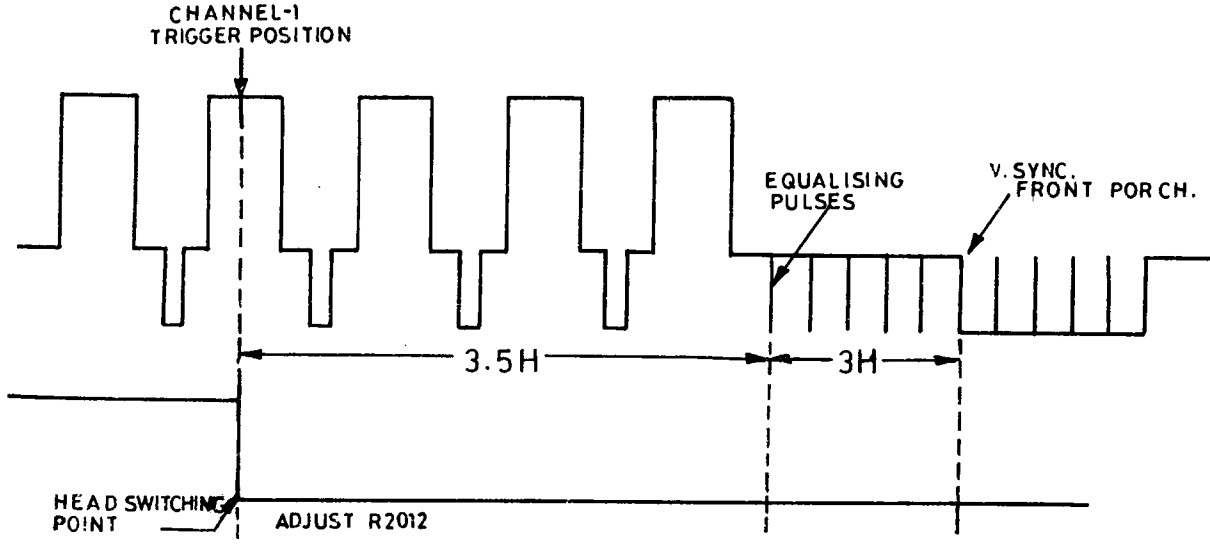

Fig. 11.6 Channel one head switching point adjustment wave forms

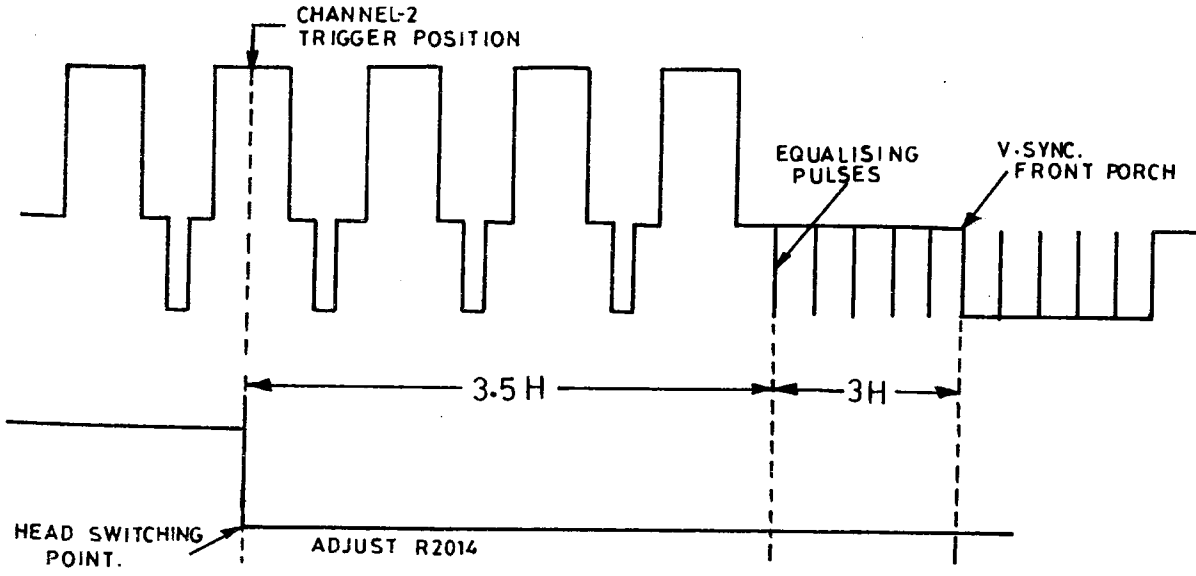

Fig. 11.7 Channel two head switching point adjustment wave forms

rising edge of switching pulse is 6 ± 0.5 H before the beginning of the V-sync as shown in fig. 11.7

5. Now switch the slope selector on the slope to either (+) or (-) and adjust R 2012 or R 2014 for less than 10 μ sec difference as shown in fig. 11.8.

Since it is very difficult to count 6.5 H, this method of bringing the difference between the rising edge and falling edge to less than 10 μ sec. is used. You note that a narrow noise band may appear at the bottom of the picture if the head switching occurs too soon, and noise may be introduced during vertical sync, possibly resulting in vertical sync problems, if the head switching pulse is late.

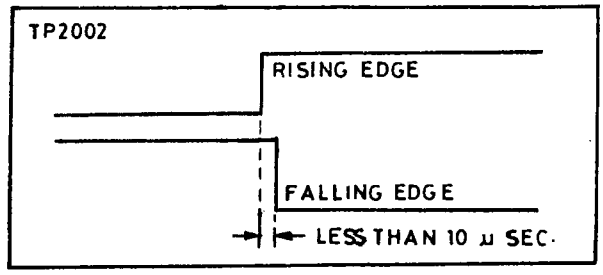

Fig. 11.8 Switching edge difference

11.7 RECORD SHIFTER ADJUSTMENT

1. Connect the oscilloscope CH 1 to TP 3013 on the Video Section and CH 2 to TP 2002 on the servo section
2. Supply a video signal from colour bar generator to the VIDEO INPUT or tune to a local TV Station
3. Operate the VCR in Rec./Play mode
4. Set the oscilloscope to the delay mode, and expand the V-sync portion
5. Now adjust Rec. shift control R 2010 on the servo section so that the head switching position is 6 ± 0.5 H before the beginning of the vertical sync as shown in fig. 11.9.

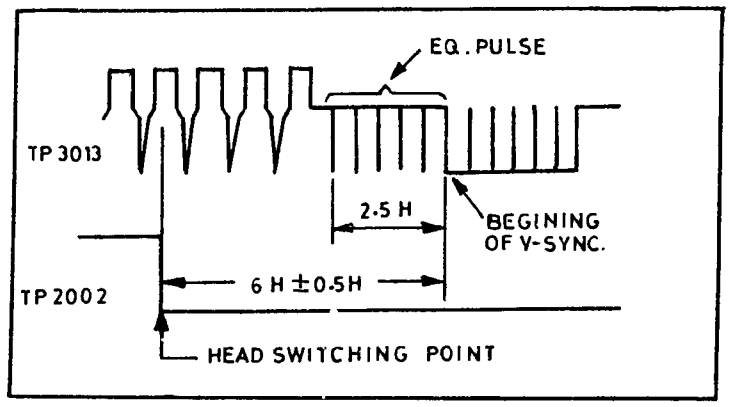

Fig. 11.9

11.8 CONFIRMATION OF TRACKING PRESENT

1. Connect the oscilloscope to TP 2009 on the servo system
2. Supply a video signal from colour bar generator to the VIDEO INPUT or tune to a local TV station
3. Operate the VCR in Rec./Play mode
4. Now confirm that the pulse width in the oscilloscope is 23 ± 3 m sec. as shown in fig. 11.10.

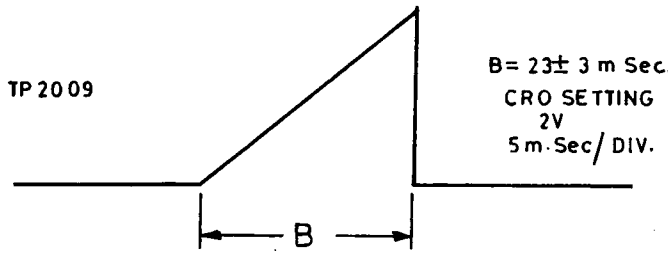

Fig. 11.10

11.9 TRACKING MONOSTABLE MULTIVIBRATOR ADJUSTMENT

1. Set the TRACKING VR on the front panel to the centre detect point
2. Supply video signal to the video input on the same panel and make a recording for few minutes
3. Connect the scope CH1 to TP 2002 and CH2 to TP 2009 both on the servo section
4. Playback the just recorded portion and adjust the tracking control R 2035 on the same section so that both the waveforms become as shown in fig. 11.11.

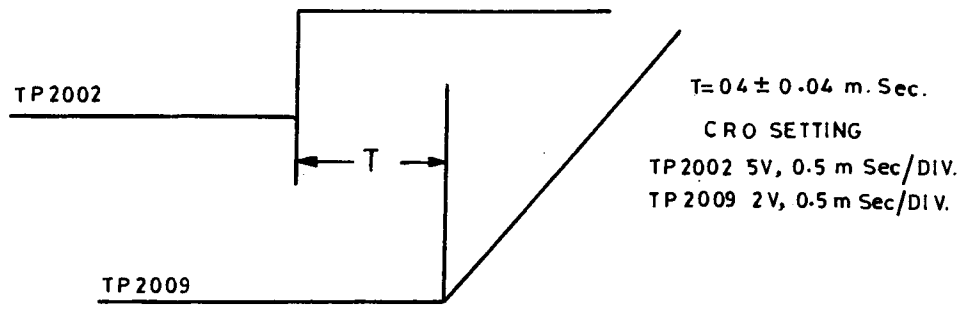

Fig. 11.11

11.10 CONFIRMATION OF SHORT REWINDING TAPE LENGTH

1. Load a 120 minutes tape in the VCR
2. Slightly rewind the tape from tape end
3. Operate the VCR in REC/PLAY mode and press the PAUSE button. Then, confirm the short rewinding tape length as between 4 and 6 cms.

11.11. PHASE ADJUSTMENT OF ADDITIONAL VERTICAL SYNC PULSE

1. Load the alignment tape in VCR and playback the tape
2. Operate the STILL mode
3. Connect the oscilloscope CH1 to TP 2002 on the servo section and CH2 to TP 3013 on the video section
4. Set the scope to Delay mode and expand the additional V-Sync portion
5. Adjust R 2010 on the servo section so that the beginning of the additional V-Sync pulse is 150 μ sec ± 20 μ sec after the head switching position as shown in fig. 11.12.

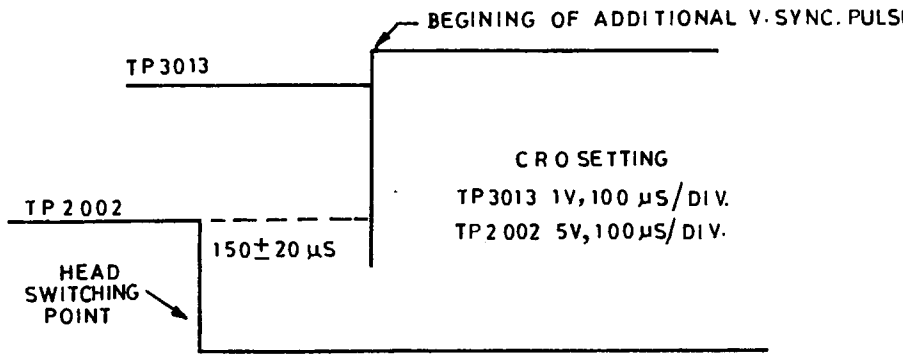

Fig. 11.12

11.12 VIDEO, COLOUR AND AUDIO CIRCUIT ADJUSTMENTS

The quality of good video and audio is to be ensured and for this, the following adjustments in video, colour and audio circuit are to be made :

1. E-E level adjustments
2. Dark and white clip adjustments

3. Sync tip frequency and deviation adjustments
4. Video recording circuit adjustments
5. AFC frequency adjustments
6. APC frequency adjustments
7. Reference oscillator adjustments
8. Comb filter adjustments
9. Head amplifier peak frequency adjustments
10. Head amplifier frequency response adjustments
11. Playback level adjustments
12. Confirmation of test signal frequency
13. Confirmation of E-E audio level
14. Audio bias current adjustment
15. Audio playback level adjustment
16. Confirmation of full erase head oscillator level.

While making these adjustments, it is presumed that the colour TV receiver used for alignment is of good quality. So you must ensure that you are using a good quality colour TV receiver.

11.13 E-E LEVEL ADJUSTMENT

1. Apply a colour bar signal to the Video Input and disconnect the connector from the Video Output from the rear panel
2. Connect the scope to TP 3013 on the video section
3. Operate the VCR in the REC/PLAY mode
4. Now adjust the E-E level control R 3017 in the video section for 2V P-P video signal, i.e., the wave form in the oscilloscope shows 2.0 ± 0.1 V P-P.

11.14 WHITE AND DARK CLIPPING ADJUSTMENTS

1. Apply a colour bar signal to the video input and set the VCR to Rec/Play mode
2. Connect the oscilloscope to TP 3002 on the video section
3. Now adjust the white clip control R 3019 and the dark clip control R 3011 on the video section so that the wave form becomes as shown in fig. 11.13.

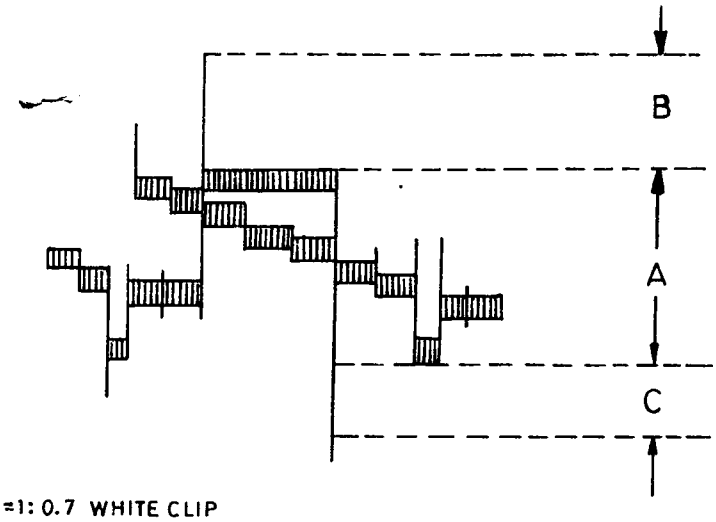

A : B = 1 : 0.7 WHITE CLIP
A : C = 1 : 0·4 DARK CLIP

Fig. 11.13 White clip and dark clip adjustment wave forms

11.15 SYNC TIP FREQUENCY AND DEVIATION ADJUSTMENT

This adjustment should be made only when there is a badly distorted wave form or very bad S/N ratio or obvious misalignment of the FM carrier and deviation or when the components of FM modulation circuits are replaced.

1. Do not apply a video signal to the video input
2. Operate the VCR in Rec/Play mode and connect the frequency counter to TP 3003 on the video section
3. Adjust the FM frequency control R 3013 so that the frequency counter reads 3.8 MHz ± 0.1 MHz
4. Next, playback the alignment tape
5. Connect the oscilloscope to TP 3013 on the video section
6. Now adjust the playback level adjustment control R 3091 on the video section so that the video level becomes 2.0 ± 0.1 V PP
7. After the above adjustments, apply a colour bar signal to the video input and make a recording for few minutes
8. Now connect the oscilloscope to TP 3013 and playback the just recorded portions
9. Adjust the deviation control R 3012 on the video section until the playback level becomes 2.0 ± 0.1 V PP.

11.16 VIDEO RECORDING CURRENT ADJUSTMENT

In this adjustment, both luminance signal current and chroma signal currents are to be adjusted for proper level.

1. Apply a colour bar signal to the video input and operate the VCR in Rec/Play mode
2. Connect the oscilloscope to TP 3008 (Hot point) and TP 3009 (Ground) on the video section
3. Connect a jumper between TP 3003 and GND (Ground) on the same section
4. Adjust the chroma recording current control R 8029 on the video section so that the wave form becomes as shown in fig.11.14

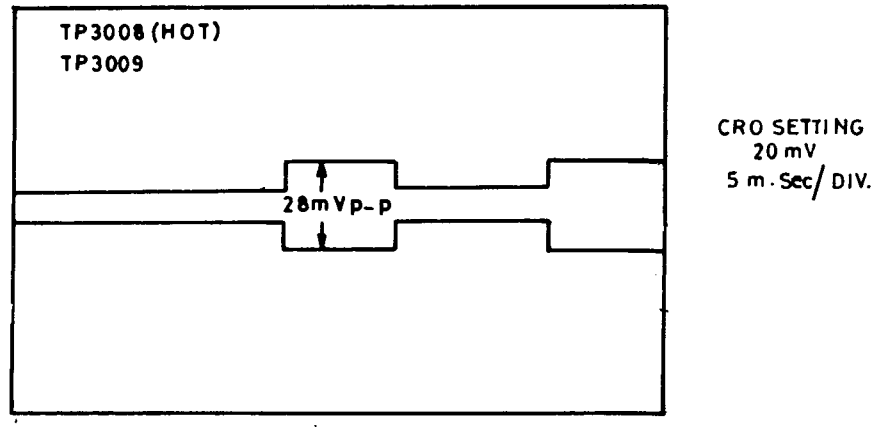

Fig. 11.14

5. Remove the jumper and adjust and luma signal current control R 3020 so that the wave form becomes 150 mV P-P as shown in fig.11.15.

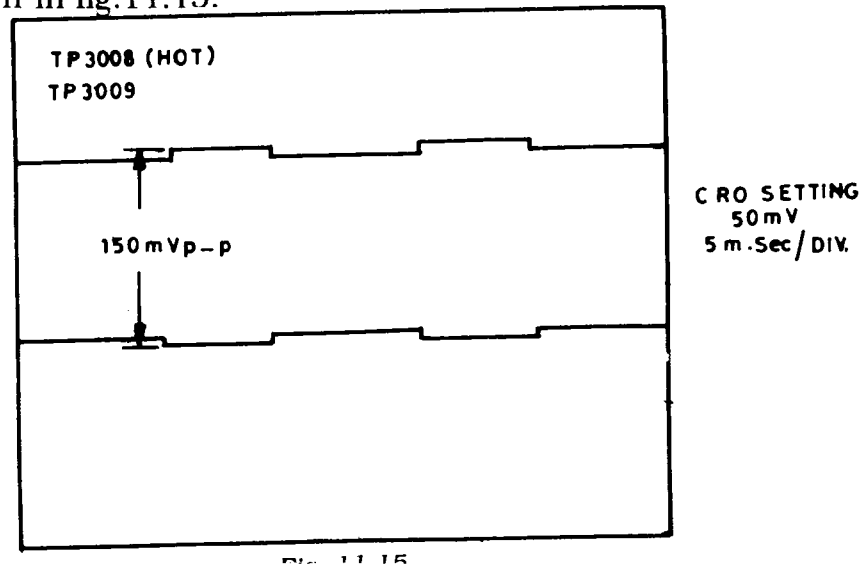

Fig. 11.15

11.17 AFC FREQUENCY ADJUSTMENT

This adjustment is to ensure that the scanning is proper.

1. Disconnect the connector from the video input
2. Put the VCR in STOP mode
3. Connect the jumper between TP 8007, TP 8009 and GND to the colour section.
4. Adjust the APC frequency control C 8044 on the video section so that the frequency counter reads 15625 ± 50 Hz.

11.18 APC FREQUENCY CONTROL

1. Remove the connector from the Video Input
2. Operate the VCR in REC mode
3. Connect a jumper between TP-8007, TP-8009 & GND to the colour section
4. Adjust the APC frequency control C-8044 on the video section so that the frequency counter reads 4.433619 MHz ± 50Hz.

11.19 REFERENCE OSCILLATOR ADJUSTMENT

1. Do not apply any video signal to the video input
2. Put the VCR in STOP mode
3. Connect the frequency counter to TP 8010 on the colour section by using 10 : 1 probe
4. Adjust oscillator frequency control C 8055 so that the frequency is 4.433619 MHz ± 10 Hz.

11.20. COMB FILTER ADJUSTMENT

1. Connect the Sweep generator to TP 8003 on the colour section
2. Set the signal select button on the Sweep Generator to 'CHROMA'
3. Connect the oscilloscope to TP 8005 and set the output level of Sweep Generator to 600 mV P-P
4. Adjust comb filter adjustment R 8016 so that the carrier leakage 'A' at 4.43 MHz becomes minimum as shown in fig. 11.16.

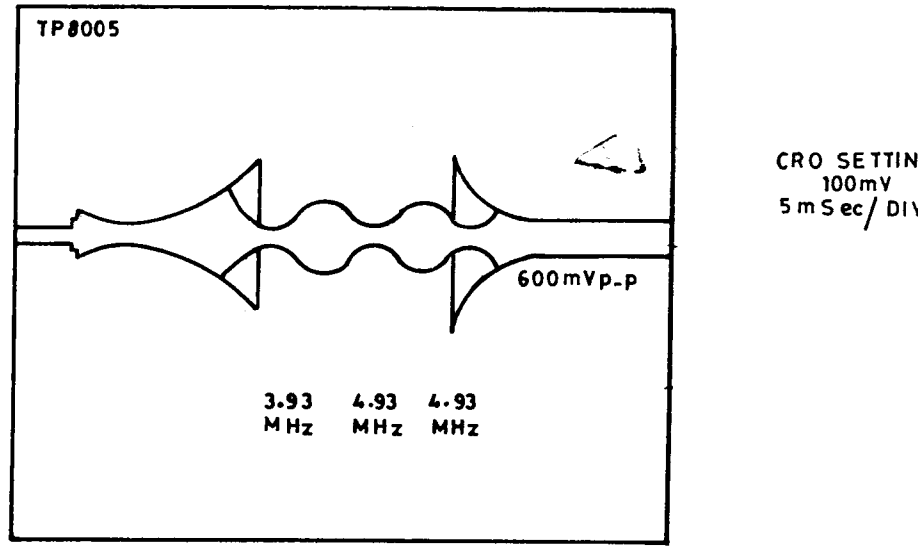

Fig. 11.16

11.21 HEAD AMPLIFIER PEAK FREQUENCY ADJUSTMENT

1. Set the output of the sweep generator to 200 mV P-P
2. Apply the above signal to TP 3006 and TP 3008 on the video section through the resistor 39 KΩ as shown in fig. 11.17

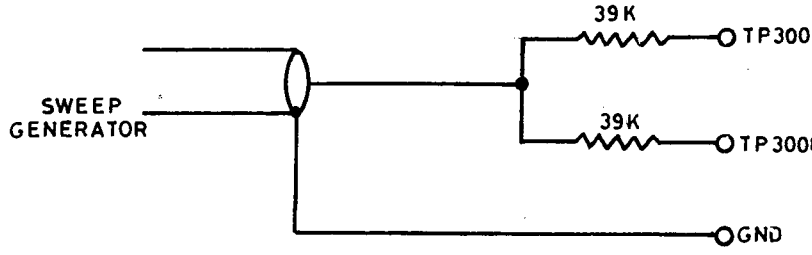

Fig. 11.17

3. Operate the VCR in Playback mode with a blank tape
4. Connect the oscilloscope to TP 8001 on the colour section
5. Adjust R 3042 for the channel 1 head Q and R 3043 for channel 2 head Q so that the level at 4.9 MHz becomes maximum
6. Now adjust Peak Frequency Control C 3031 & C 3032 for channel 1 & 2 so that the peak on the oscilloscope becomes 4.9 MHz as shown fig. 11.18.

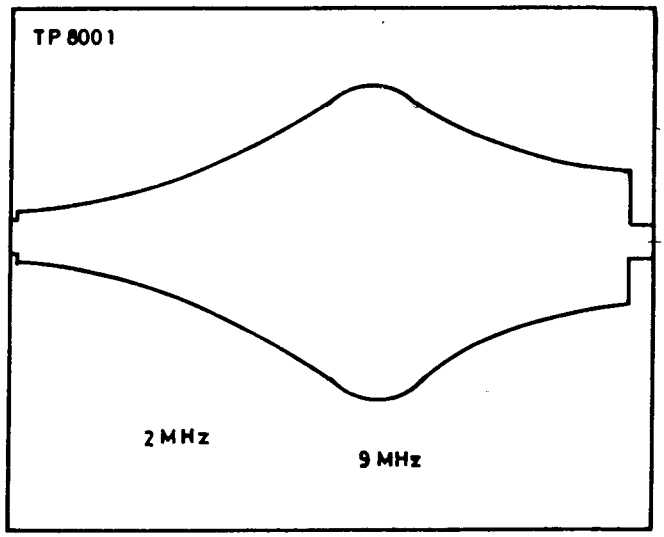

Fig. 11.18

11.22 HEAD AMPLIFIER FREQUENCY RESPONSE ADJUSTMENT

1. Set the picture sharpness control to the click point
2. Set the output level of the sweep generator as given in figure 11.19

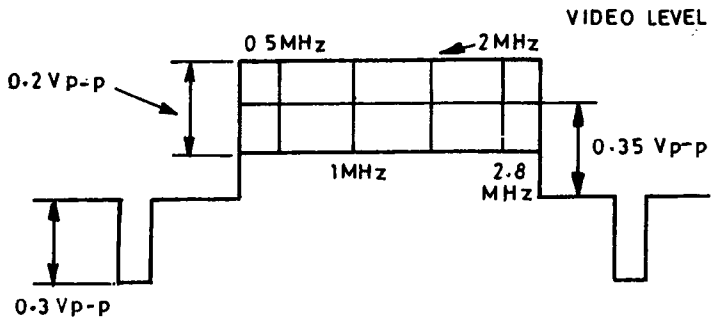

Fig. 11.19

3. Apply this output signal of sweep generator to the video input and make recordings for few minutes
4. Connect the oscilloscope to TP 3013 on the video section and playback the just recorded portion
5. Now adjust the head Q adjustment controls R 3042 and R 3043 of channels 1 & 2 so that the waveform becomes as shown in fig. 11.20.

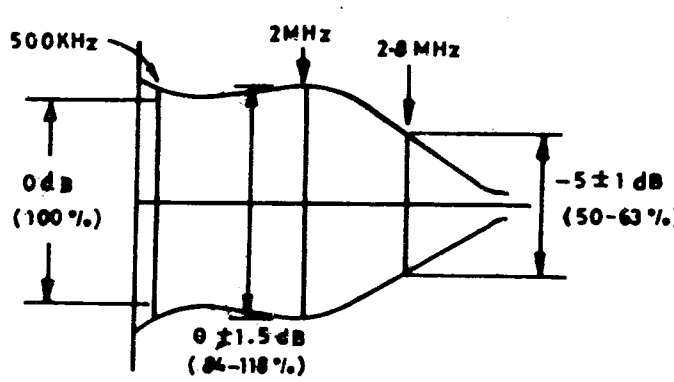

Fig. 11.20

11.23. PLAYBACK LEVEL ADJUSTMENT

1. Apply a colour bar signal to the video input and make a recording for few minutes
2. Connect the oscilloscope to TP 3013 on the video section and playback the just recorded portions
3. Adjust the playback level control R 3091 on the video section so that the video level becomes 2.0 ± 0.15 V P-P.

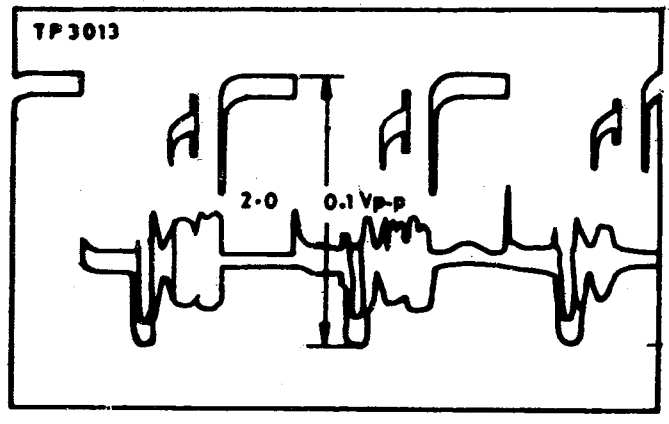

Fig. 11.21

11.24 CONFIRMATION OF TEST SIGNAL FREQUENCY

1. Do not apply any video signal to the video input
2. Place the VCR in the STOP mode
3. Set the Colour/Test Signal select switch on the output jack board to Test signal
4. Connect the oscilloscope to TP 3014 and make sure that a period of the horizontal sync signal is 64 μ sec ± 0.3 μ secs.

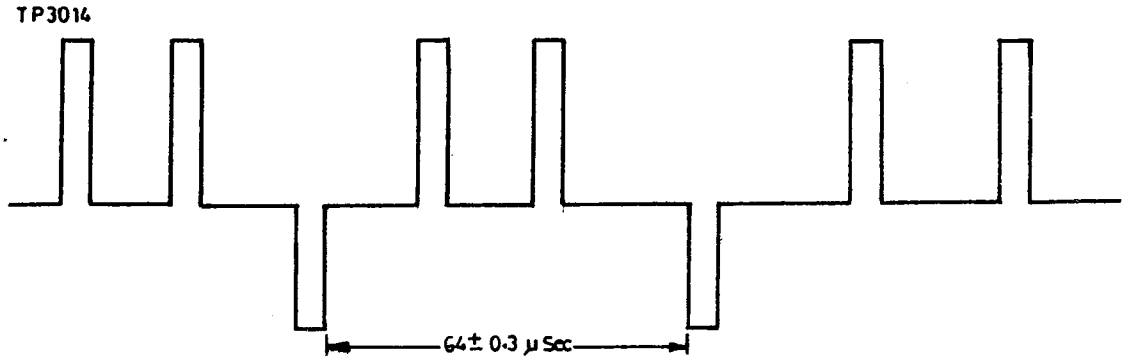

Fig. 11.22

11.25 CONFIRMATION OF E-E AUDIO LEVEL

1. Apply 1 KHz audio signal at -10dBm level to the audio input
2. Operate the VCR in the STOP mode
3. Connect the oscilloscope in the audio output terminal
4. Measure and make sure that it is between 1 V P-P (-9 dBm) and 1.8 V P-P (-5 dBm).

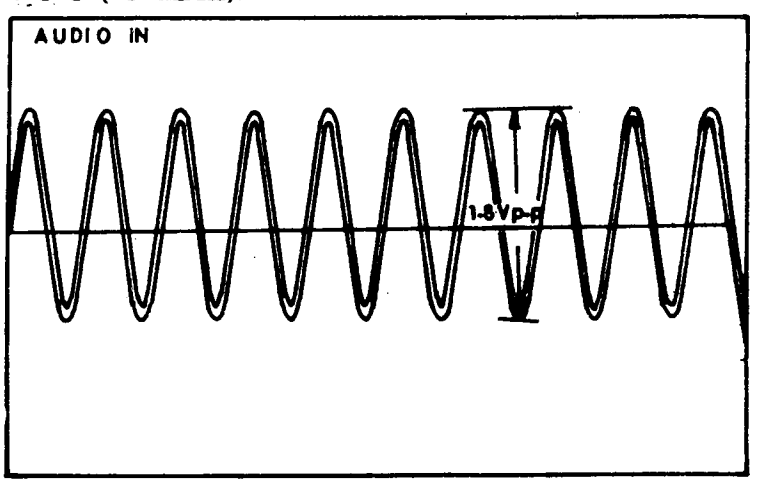

Fig. 11.23

11.26 AUDIO BIAS CURRENT ADJUSTMENT

1. Do not apply any audio signal to the audio input
2. Connect the oscilloscope to TP 4002 (HOT) and TP 4003 (GND) on the audio section
3. Operate the VCR in REC/PLAY mode
4. Adjust audio bias current adjustment control R 4048 on the audio section so that the wave form becomes 9.6 ± 0.3 mV P-P as shown in fig. 11.24.

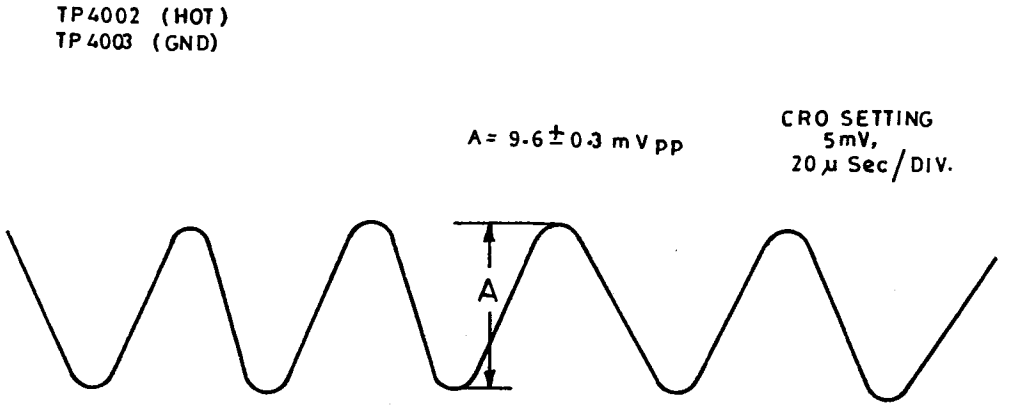

Fig. 11.24

11.27 AUDIO PLAYBACK LEVEL ADJUSTMENT

1. Apply 1 KHz audio signal at -10 dBm level to the audio input and make a recording for few minutes
2. Connect the oscilloscope to TP 4001 on the audio section and playback the just recorded portion
3. Adjust audio playback control R 4029 so that the playback level becomes 140 mV P-P (E-E level)

11.28. CONFIRMATION OF FULL-ERASE HEAD OSCILLATOR LEVEL

1. Operate the VCR in REC/PLAY mode
2. Connect the oscilloscope to the Full Erase head as shown in fig. 11.25
3. Make sure that the oscillator level is more than 30 V P-P

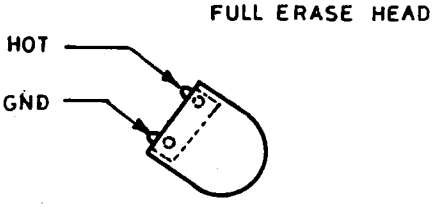

Fig. 11.25

11.29. CLOCK ADJUSTMENT

1. Put the VCR mode selector to 'CLOCK' position and ensure that the time reads 0.00

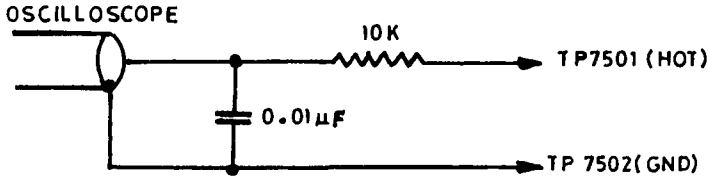

Fig. 11.26

2. Now connect the oscilloscope to TP 7501 (HOT) and TP 7502 (GND) through the filter. (Fig.11.26)

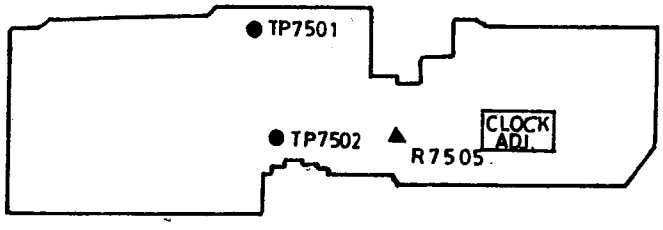

Fig. 11.27

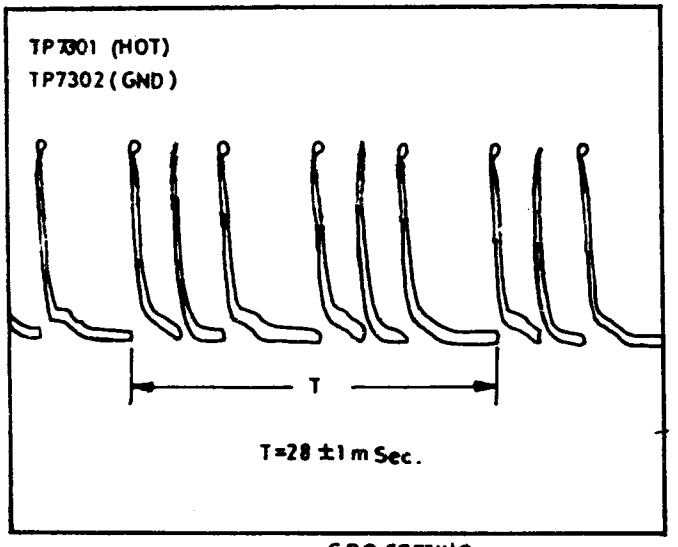

CRO SETTING:
10 V, 5 m.Sec/DIV.

Fig. 11.23

3. Adjust the clock time adjustment control R 7505 so that the period 'T' becomes 28 ± 1 mSec.

12

VCR TROUBLESHOOTING AND SERVICING

Troubleshooting is an important aspect in understanding any equipment and correcting the faults. This requires step-by-step logical approach to locate the faults at first instance without wasting time. For this, you must follow seven basic steps given here.

1. All manufacturers provide service literature, user instructions, schematic diagrams and so on. You must study all these and find out how each circuit works when VCR functions normally. If you do not take the pains to know what is normal, you will never know what is abnormal. For example, some VCRs simply give better quality recordings than others, even in places where TV broadcast signal is weak. It would be a waste of time to attempt to get best quality recordings of TV broadcast in the fringe area of a TV station.
2. You must know the functions of all VCR controls and adjustments. As VCR ages, readjustments and realignment of critical circuits become unavoidable.
3. You must know how to interpret service literature provided by the VCR manufacturer. Generally, VCR literatures do not give the description of how the circuits operate. It is a known fact that the "how it works" portion (theory of operation) of VCR is often simply omitted or poorly written in any VCR literature. Remember, a well-written service literature or book is your best friend in the service table.
4. You must be able to analyse logically the informations provided by the test equipment and TV monitor. When you use CRO or TV monitor, make sure that the test equipments and TV are in excellent working condition; otherwise you will be misled.
5. When you analyse, please keep in mind that the "logical procedure" for one type/brand of VCR may be quite illogical for another. For example, it would be quite illogical to check operation of freeze frame on a VCR not so equipped. However, it is quite logical to check the video, audio and control tracks on all VCRs.

6. After repairs. complete the check out procedure, i.e. check up the VCR on each operating mode one by one because VCR may require alignment, both mechanical and electrical, after repairs.
7. For repairs, use proper tools recommended by the manufacturers.

TROUBLESHOOTING APPROACH

Troubleshooting approach can be in four major steps for any electronic equipment and this is applicable to VCR also :

1. Determine the trouble symptom
2. Localise the trouble to a functional unit
3. Isolate the trouble to a circuit
4. Locate the specific trouble, probably to a specific part.

Let us examine these aspects in detail :

Determining the Symptoms

Determining the symptoms means to know what the VCR is supposed to do in a particular mode of operation in the normal operating conditions and also to recognize the conditions under which the normal job is not being done by the VCR. For this, it is not necessary to use the test equipment extensively. But by visual check and careful observations, both normal and abnormal performance of VCR in all modes of operation can be noted and these observations will guide you to locate the exact area of VCR which is faulty. Now let us proceed further to the next step.

Localise the Trouble to a Functional Unit

VCR circuits are divided into many functional units such as luminance circuitry, chroma circuitry, audio, servo control, system control, power supply, RF unit and mechanical section. If you have the knowledge of function of each unit and how they are interlinked, you will be able to analyse and locate the faulty circuitry or section from the observations made.

As a classic example, if the sound is poor and the picture is good, then the problem will be in the audio section. But if both sound and video are poor, then it can most probably be in the area which is common to both audio and video sections viz. tuner or IF section or

weak input signal. By similar logical approach, you can locate the faulty unit of VCR. You can also refer to the block diagrams and schematic diagrams of VCR literature.

Isolate the Trouble from the Circuit

After localising the fault to a single functional unit, the next step is to go further to locate the fault to a particular circuit. At times, more than one circuit may be giving problems and this is to be kept in mind while trying to localise the fault to a circuit. For this aspect, test equipments such as CRO, frequency counter, pattern generator, multi-meters will have to be used. At times, due to dry soldering the problem may arise intermittently, thus creating confusion. It may be kept in mind that repair techniques are not to be used until after specific trouble is located and verified. That is, only after making sure about the fault in a specific circuit, then attempt to repair it.

Locating the Specific Trouble

To locate the specific trouble, inspection of components is very important. By sight, smell, hearing and touch of components. You can easily locate the fault to a particular spot. Any burned, charred or overheated parts, arcing in a high voltage circuits, and burn-out parts are the real trouble parts and such components need replacement.

Next step is to observe the waveforms in the oscilloscope, to measure the voltage at test points of VCR circuitry and to check the frequency of oscillator and servo system signals.

In case of mechanical parts, only visual inspection is helpful.

After locating the fault, then try to repair or replace the defective components and above all check the performance of VCR in all modes after repairs.

NOTES ON SERVICING

The service notes prepared for technician or service engineer pertaining to VCRs are given here. The guidance given here are not with reference to any particular type of VCR. It is equally applicable to all VCRs. Let us have a look at it.

1. Dead Set. No indication.
   (a) Check the main voltages, power transformer and safety components (fuse, fusable resistors, etc.). Also check power socket and mains power cord.
   (b) System Control IC may be defective.

2. No display but all operations are OK.
   (a) Display unit may be defective.
   (b) Check the power supply voltages to the Display unit.
   (c) Check the input AC voltage from power transformer to the display unit.

3. Picture OK, but no sound.
   (a) Audio IC may be defective.
   (b) Audio head dusty or misaligned.
   (c) Partially defective RF converter.
   (d) Defective coupling components.
   (e) Defective system control IC or audio muting transistor.

4. Picture OK but sound is weak.
   (a) misadjusted audio playback level preset.
   (b) Misaligned or dusty Audio head.

5. Picture OK but sound is distorted.
   (a) Leaky coupling components from head to audio IC and audio IC output pins to RF convertor audio IN.
   (b) Sound coil in RF convertor misaligned.
   (c) Audio head dusty or defective.

6. Picture OK but no sound during recording.
   (a) Audio IC partly defective.
   (b) Audio REC/PLAYBACK mode select IC defective.
   (c) Open circuit in Audio bias signal path.

7. Picture OK but weak sound while recording.
   (a) misadjusted audio bias preset.

8. Plain raster, normal sound.
   (a) Defective luminance IC.
   (b) Open circuit in head amplifier output to luminance IC.
   (c) Video portion of the RF convertor may be defective.
   (d) Open circuit in the coupling path from luminance IC to RF convertor IC.

9. No colour, B/W picture but sound OK.
   (a) Chroma IC defective.
   (b) Chroma signal path defective.
   (c) Wrong colour system selection (Select PAL system).
   (d) Presets in chroma section misadjusted.
   (e) Malfunctioning of Colour killer circuit.

10. Intermittent colour, B/W picture but sound OK.
    (a) Misadjusted AFC & or APC presets.

11. Snowy picture but sound OK.
    (a) Weak input off broadcast signal
    (b) One channel of video head may be dusty or defective.
    (c) Head amp IC partly defective.
    (d) RF cord defective.
    (e) Cassettes of poor quality.
12. Snowy raster (Big grains), sound OK
    (a) Both channels of video head dusty or defective.
    (b) Head amp IC defective.
13. No colour recording but B/W and sound recording OK.
    (a) Chroma IC defective.
    (b) Chroma recording current preset defective/misadjusted.
14. No Picture, Sound recording OK.
    (a) Luminance IC defective.
    (b) Luminance recording current preset defective/misadjusted.
15. No picture recording, sound recording OK ; Only snow appears.
    (a) Video heads weak.
    (b) Video head grounding transistors in record mode defective.
16. Snowy still picture, snowy quick finder, picture jumping with some cassettes.
    (a) Video head weak (both channels).
    (b) Adjust tape tension properly
17. Dull picture, Sound OK.
    (a) Defective or misadjusted Luminance playback level preset.
18. No audio erase.
    (a) Defective erase head.
    (b) Defective erase oscillator.
19. No picture, No sound, No change in TV snow and all other operations are OK.
    (a) RF convertor IC defective.
    (b) Connecting cord from VCR to TV defective.
    (c) Supply to RF convertor absent.
    Note : Partial defect in RF convertor IC will be either no sound picture OK or plain raster sound OK.
20. TV programme recording Not OK. Only Snowy raster and No sound
    (a) Check antenna connections.
    (b) TV demodulator tuner defective.

21. TV programme recording not OK. Only plain raster.
    (a) TV demodulator, Vision IF section defective.
    (b) Defective Video pre-amplifier.

22. No front loading, however power indication OK.
    (a) Front loading mechanism (if motor tries to rotate, circuit OK. If motor does not try, proceed as follows :)
    (b) Check cassette-in switch.
    (c) Check drive IC.
    (d) Check System control command to the drive IC.
    (e) Check motor.

23. No eject but all other operations are OK.
    (a) Eject switch in key section defective.
    (b) Eject motor drive IC defective.
    (c) System control IC defective.
    (d) Motor defective.

24. Cassette comes out after a few seconds when front loaded.
    (a) Check front loading belt.
    (b) Check down switch for open.
    (c) Front loading mechanism dusty (clean and grease).
    Note : In some models, loading and front loading is done by the same motor.

25. All operations are OK, however power is getting off after eject.
    (a) Defective Cassette-out switch.

26. No tape loading operations.
    (a) Loading motor drive IC defective.
    (b) Loading motor defective.
    (c) Command from system control IC to drive IC may be absent. (System control defective).

27. No REW, No FF but all other operations are OK.
    (a) Check REW/FF idler.
    (b) Check Reel motor drive IC.
    (c) Check Reel motor.
    (d) Check system control command to the drive IC.

    Note : In some models, Capstan motor will be driving reel function also.

28. Capstan Motor not rotating.
    (a) Capstan motor drive IC defective.
    (b) Command from system control to drive IC defective.
    (c) Capstan motor defective.

29. Drum Motor not rotating.
    (a) Drum motor drive IC may be defective.
    (b) Command from system control to drive IC absent.
    (c) Drum motor may be defective.

30. In PLAY mode, picture accompanied by wow and flutter. This is a problem due to capstan motor speed. Check components as follows :
    (a) Check Capstan motor speed control ICs.
    (b) Check capstan motor speed feed-back amp.
    (c) Check Capstan Motor drive IC.

31. Picture tearing and vertical rolling, however sound OK. This is a problem due to wrong speed of Drum motor. Check components as follows :
    (a) Drum motor speed control ICs.
    (b) Check Drum motor speed feed back amp.
    (c) Check drum motor drive IC.

32. Tracking bars moving vertically over the picture and sound OK
    (a) Control head dusty.
    (b) Check tracking control and preset.
    (c) Check tracking control IC (the IC in which control head and tracking control is connected).
    (d) Check loading blocks for misadjustment.

33. Auto stop in PLAY mode. Drum motor & Capstan motor running, loading OK. Idler also OK.
    (a) Check head switching pulse generator IC (Servo).
    (b) If heads head switching pulse absent, check the signal input to produce head switching pulse.
    (c) Servo control IC may be defective.

34. Thick snow bar on the top or bottom of the screen, remaining portion of the picture OK.
    (a) Misaligned switching presets (or PG shifter preset) in servo.

35. Picture jittering / rolling vertically sometimes.
    (a) Misaligned switching presets in Servo.

36. Dew indication, no operation except front loading & Eject (The head motor runs continuously in this problem)
    (a) Dew sensor thermistor open.
    (b) Dew sensor IC defective.
    (c) System control IC defective.

37. No RECORD operation, all other operations are OK. (When RECORD switch is pressed, no indication and mechanical movement).
    (a) Record safety switch open.
    (b) System control IC defective (check record safety switch connections).

38. Auto Stop in all modes (i.e. when REW/FF is done the operation takes place for a few seconds, then shuts off automatically. In PLAY mode picture is available for a few seconds and then goes off).
    (a) Reel sensor defective or dusty.
    (b) System control IC defective (check reel sensor input pin).

39. Immediately after front loading, Auto FFWD takes place for a few seconds then shuts off automatically. No other operation except eject takes place.
    (a) Check end sensor photo transistor for short.
    (b) System control IC may be defective.

40. Auto REWIND takes place immediately after front loading the cassette. After a few seconds, auto stops, no other operation except eject, takes place.
    (a) Check end sensor photo transistor for short (Supply photo transistor).
    (b) System control IC defective.

41. No Auto REWIND operation, after play auto stop.
    (a) End sensor lamp or LED defective.
    (b) End sensor transistors open.
    (c) System control IC defective.
    (d) Check transparent tape in the end of the cassette.

42. Immediately auto ejects after front loaded, cassette down indication also appears.
    Because cassette down indication is OK, proceed as follows :
    (a) Check end sensor photo transistors for short (both at once).
    (b) System control IC may be defective.

43. No EJECT, REWIND, FAST FORWARD, PLAY but power indication is OK and front loading is OK.
    (a) Mode instruction or operation IC defective.
    (b) System control IC defective.

44. No display of operation but timer display is OK and all other operations are OK.
    (a) Check display control IC.
    (b) Check system control commands to display drive IC.
    (c) Check display unit.

45. No Timer display.
    (a) Timer IC defective.
    (b) Timer display unit biasing voltages.

46. Auto Recording after front loading and unable to stop recording using operational controls.
    (a) Timer IC defective (timer IC is giving continuous timer recording commands).
    (b) System control IC defective.

47. After switching on power, timer is not showing 0:00 but showing some wrong time.
    (a) Adjust timer reset voltage.
    (b) Check timer reset voltage circuit.

48. Auto Power off after few seconds of operation.
    (a) Check timer REC ON/OFF switch for ON condition (normally it should be off).
    (b) Check system control IC.
    (c) Partial short in the power transformer.
    (d) Idler may be defective.

49. No remote operation.
    (a) Check for exhausted batteries in the remote control unit.
    (b) Remote control IC may be defective.
    (c) Remote sensor and amplifier in the VCR may be defective.
    (d) System control IC may be defective.

50. Slow picture and Slow sound.
    (a) Pinch roller may be defective.

51. Picture and sound OK but no test pattern available (in some models.
    (a) Check test pattern generator IC.
    (b) Check test pattern selector switch, if any.

52. In Play mode Picture and Sound OK but in Still and Quick Finder mode Picture jumps/rolls vertically.
    (a) Adjust V.lock preset.
    (b) Check artificial vertical sync generator IC.

53. Thin snow bars appear on top of the picture.
    (a) Adjust supply loading block.
54. Thin snow bars appear on bottom of the picture.
    (a) Adjust take-up loading block.
55. Tape remains but unloaded after play stopped. In Eject mode loose tape struck-up in mechanism.
    (a) Change the Idler.
    (b) Change the Reel Motor Drive IC.
56. Incomplete tape loading. Power gets off in Play mode.
    (a) Check loading mechanism gear adjustment.
    (b) Loading belt may be defective.
    (c) Loading switches may be defective.

OTHER TITLES OF INTEREST

ANTENNA/SATELLITE TV

ANTENNA Handbook
Build A Personal Earth Station for Worldwide TV Reception
SATELLITE Television Handbook
Home SATELLITE TV Installation & Troubleshooting Manual
Install, Aim & Repair SATELLITE TV System
World SATELLITE TV and Scrambling Methods – Technicians H/B

DATA COMMUNICATION

DATA COMMUNICATION: Network & Systems

DATA MANUALS-MISC

CMOS Data Book (74 Series)
CMOS Data Book (4000 Series)
DIGITAL IC Equivalents with Pin Connections
Everyday Electronics Databook
International DIODES Equivalents
International DIODE & SCR Index
International INTEGRATED CIRCUITS Index
LINEAR IC Equivalents with Pin Connections
MICROPROCESSOR Data Handbook
Semicon's International TRANSISTOR Index
Tower's International DIGITAL IC Selector
Tower's International OP-AMP LINEAR IC Selector
Tower's International TRANSISTOR Selector
The JAPANESE TRANSISTOR Data Manual
The JAPANESE TRANSISTOR Substitution Manual
Up to Date World's TRANSISTORS–DIODES–THYRISTORS & IC's Comparison Table (A...Z)
Up to Date World's TRANSISTORS–DIODES–THYRISTORS & IC's Comparison Table (IN–60000)
World TRANSISTOR Equivalents & Data (A-Z)
World TRANSISTOR Equivalents & Data (O-μ)

HOBBY ELECTRONICS

24 S.C.R. Project
150 Circuits
500 Electronic IC CKTs with Practical Applications
555 TIMER Applications Sourcebook Experiments
Adventure with ELECTRONICS
Adventure with MICROELECTRONICS
Adventure with DIGITAL ELECTRONICS
An Introduction to DIGITAL ELECTRONICS
ANALOG Electronic Circuits
AUDIO IC Circuits Manual
CMOS Circuits Manual
DIGITAL ELECTRONICS Projects for Beginners
Electronics ALARM Circuits Manual
ELECTRONICS for Today & Tomorrow
ELECTRONICS Build & Learn
Electronics Projects for Home Security
Electronic TELEPHONE Projects
Electronic TEST EQUIPMENT Handbook
INTEGRATED CIRCUITS Applications

HOBBY ELECTRONICS

OPTOELECTRONICS Circuits Manual
Practical DIGITAL ELECTRONICS Handbook
Practical MUSIC & SOUND Circuits
RELAYS and their Applications
TIMER/GENERATOR Circuits Manual
The ENCYCLOPEDIA of Electronic Circuits
THYRISTOR Theory & Application
VERSATILE Electronic Circuits

POWER SUPPLY

Electronic POWER SUPPLY Handbook
Power Supplies Switching Regulators Invert. & Convertors
Practical TRANSFORMER Design Handbook
Switch Mode Power Supply Design

VCR / VCP

AKAI VCP Service Manual
Maintaining and Repairing VCR
Service Manual of AKAI VCP-VSP-9/84/R9EV
Service Manual of FUNAI VCP-VIP-1000/2500/3000
Service Manual of FUNAI VCP-VIP-2000/3000A
Service Manual of VCP-MONEX 555 MK II/DAEWOO
Service Manual of VCP – GOLDSTAR
Service Manual of NATIONAL VCR NV-250/450
Service Manual of NATIONAL VCR NV-300/340
Service Manual of NATIONAL VCR NV-370-EN
VCP Service Manual (FUNAI, INTER VIDEO, MONEX)
VCR Servicing & Troubleshooting

VIDEO CAMERA

VIDEO CAMERA : Theory & Servicing

LOTIA BOOKS–ENGLISH

Modern TELEVISION Circuits Vol. I to VI
Modern COLOUR Television Circuits Vol. I to III
Modern ET & T COLOUR TV Service Manual
Modern KOREAN COLOUR TV Service Manual
Modern ITT COLOUR TV Service Manual
Modern PORTABLE Television Circuits I & II
Modern TELEVISION Circuits–INSTITUTE Edition
Modern IC Substitution & Databook – update 2
Modern TRANSISTOR Substitution Manual – Update 2

LOTIA BOOKS–HINDI

Modern COLOUR TV Circuits Vol. I (HINDI)
Modern B/W TV Servicing Vol. 1 (BASIC ELECT., TEXLA KI
Modern B/W TELEVISION Servicing Vol. II
Modern TOSHIBA KIT CTV Service Manual
Modern GRUNDIG KIT CTV Service Mnl (KONARK & WEBE
Modern BPL/SANYO KIT CTV Service Manual
Modern DYNORA/SALORA KIT CTV Service Manual (CT-212
Modern COLOUR TV Servicing Vol. I & II
Modern PORTABLE Television Servicing
Modern UPTRON TV Servicing (SCR Power Supply)
Modern VCR Servicing & Fault Finding
Modern VCP Servicing & Fault Finding

BPB PUBLICATIONS
B-14, CONNAUGHT PLACE, NEW DELHI-110001

Rs. 45/-