Vintage Radio

by PETER LANKSHEAR

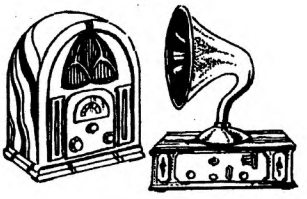

The unusual Wunderlich valve

For much of the first 70 years, the technology of the radio industry was centred on valves, which were made by the million in many hundreds of different types. It is not surprising therefore, that for a large number of vintage radio enthusiasts a valve display is a significant part of their hobby. This month, we discuss a rare and attractive specimen.

Even valves like that old mainstream stalwart, the type 6V6 output tetrode are collectable. In my own display, I have at least six examples of the 6V6, all with distinctly different shapes, sizes and methods of construction, and originating from five different countries.

Much of the diversity in valve types was really unnecessary. In many cases, a new valve was no more than an existing type, repackaged with a new envelope or a different base. However, given their wide use over such a long period of time, it was inevitable that some innovative valve designs would emerge. Some of these new concepts established fresh directions for technology, but others failed to gain wide acceptance and disappeared. This month we will look at one of the latter — a type that showed considerable promise, but which was overtaken by more adaptable types.

With a bright blue glass envelope and reddish brown base, the 'Wunderlich' shown in Fig.1 was one of the most colourful valves ever made. With a unique dual co-planar control grid, it was a 1932 product of America's Arcturus Company. Aptly named the Wunderlich — German for unusual or odd — it actually took the name of its inventor, Norman Wunderlich, who is reported to have worked originally for the RCA Victor Company and later as the Arcturus sales manager.

One way of describing the Wunderlich valve is that it was a triode with two identical interleaved control grids, between a single anode and common cathode. Unlike a conventional multigrid valve, the grids were not concentric, but were of equal diameter in the one plane. As can be seen in Fig.4, there were two identical grid assemblies, each with an independent closely spaced pair of support rods, and each grid having equal

Fig.1: With its red bakelite base and blue glass, the Wunderlich valve stands out in any display. The blue glass was an Arcturus trademark.

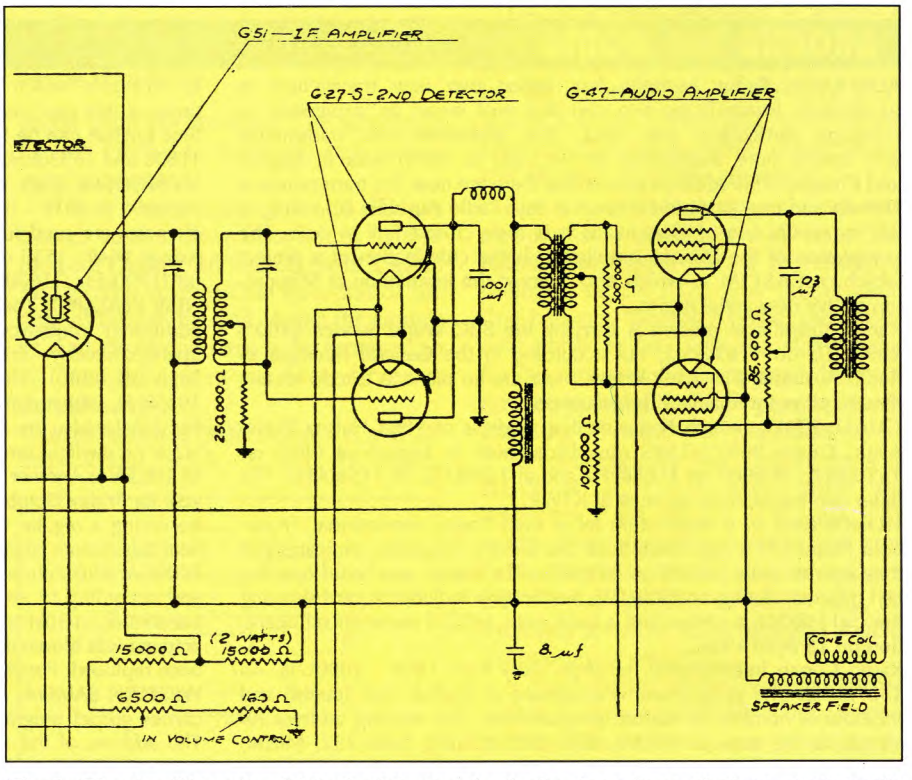

Fig.2: The traditional grid leak detector had shortcomings that created audio distortion. One solution was push-pull operation using valves like the 27, as used in the Grigsby-Grunow model 25 Majestic receivers. But this required an extra valve, at a time when they were very expensive.

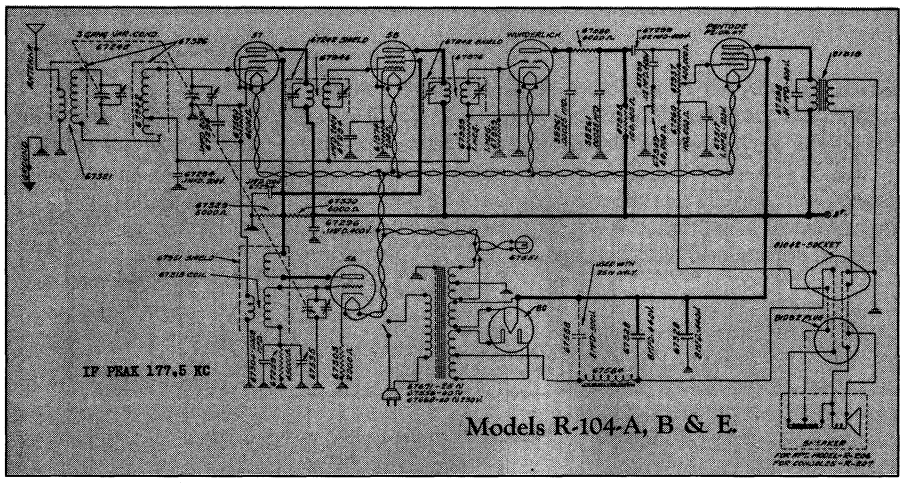

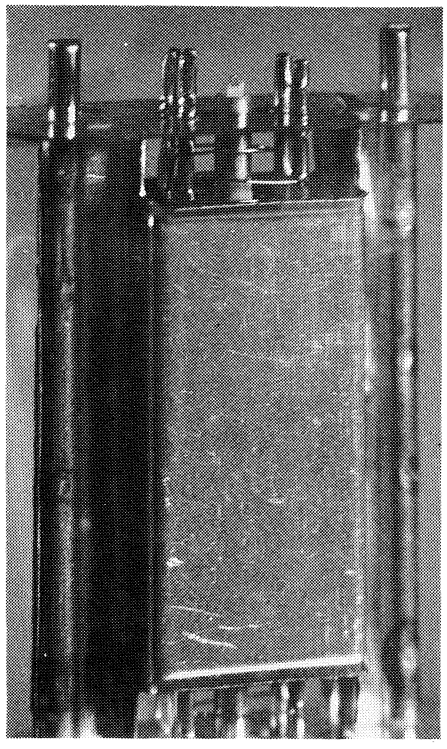

Fig.3 (above): A major user of Wunderlich valves, Stewart-Warner featured the detector in at least seven of their 1932/33 models. Their application is similar to that in other makes of Wunderlich-equipped receivers.

Fig.4 (right): This closeup of a Wunderlich internal assembly shows the top segment of each of the two grids, just above the rectangular plate. In conventional valves, the grid was wound in a spiral around the two support rods. But in this design each turn is an individual loop, and the loops of each grid are interleaved together around the cathode.

control. The grid elements, rather than having the orthodox spiral construction, were made in the form of rings.

In the years around 1930 there were frequent developments in radio technology. One field of research was the search for improved detectors. The widely used grid leak detector had its origins in the earliest days of radio, but in the standard form, it produced serious distortion — especially with strong signals at high modulation levels. A popular improvement was the system called alternatively 'anode bend', 'plate' or 'biased' detection, in which the detector valve was biased nearly to cutoff. However distortion was still somewhat high and it did not provide AGC voltages.

Improved detection

Despite its early origins and apparent simplicity, the operation of the grid leak detector is quite complex, with the grid performing two functions of a diode and directly coupled control grid. The diode action causes the grid to take up a negative bias that is proportional to the signal strength, and consequently there is only a small range of signals which will permit optimum operation.

One outcome is that, before the audio signal reaches an adequate level to drive an output stage, there is serious distortion. Furthermore, for good efficiency, a relatively large value of grid capacitor is necessary, seriously attenuating high audio frequencies.

One solution was to use a push-pull detector, a good example being in the 1931 Majestic model 25, the relevant part of the circuit being shown in Fig.2. The operation of a push-pull detector is analogous to a class B amplifier, where the asymmetrical outputs of the two halves are combined to cancel distortion. As a grid capacitor is not necessary, another benefit is improved high frequency audio response.

Although the push-pull grid leak detector was a big improvement, it was not very much used — probably because it required an extra valve. Today, this may seem to be of no great consequence; but in 1931, a valve cost an appreciable percentage of a week's wages.

Two valves in one

Wunderlich seems to have conceived his valve as the equivalent of a balanced grid leak detector, with the economy of a single envelope. A Wunderlich detector was operated in a balanced mode. The grids were driven equally, but in opposite phase so that as one grid went negative the other was driven positive. The effects of the two balance out, with any RF cancelling and leaving only amplified audio.

In practice, a Wunderlich detector can develop three times as much audio signal as a simple grid leak detector. There was a bonus in that, just as with the conventional diode detector, a negative voltage generated by the diode action was available for automatic gain control.

Although the original purpose was that of a push-pull grid leak detector, and this appears to have been its only application in receiver production, according to F.E. Terman the Wunderlich valve was used for a variety of laboratory applications.

One characteristic of the Wunderlich valve that does not seem to have been developed commercially was its ability to operate in a *space charge mode* if one of the grids was positively biased. Electrons were attracted from the cathode in copious quantities by a positively biased grid, but the majority overshot and went on to the anode, and the result was a much larger cathode current than could be obtained conventionally.

Several variations

The first Wunderlich had a 2.5 volt heater, a five-pin base and a top cap cathode connection. However, a contemporary development was the six-pin base being fitted to the new RF pentodes. This new base provided a single ended alternative for otherwise identical Wunderlich valves, which were unique in that they were not initially given a classification number or letter, but simply labelled 'WUNDERLICH - MADE IN USA BY - ARCTURUS RADIO TUBE CO'.

The practice of providing alternative bases on valves with the same type number was common in Europe, but the Wunderlich is a rare American example. When subsequently a 6.3 volt heater six-pin version was produced for car radios, an identification became necessary. The original 2.5 volt triodes were then referred to as type A and the 6.3 volt version became type A Auto.

A fourth Wunderlich valve appears on some lists. The type B is shown as having

a screen grid as well as the double control grid, but there is little published information other than that it had a 2.5 volt heater. This valve could have had some interesting characteristics, but I can find no record of its having been used in production receivers.

Not many users...

The Wunderlich valve was a good concept, but was used in less than a dozen different brands of receiver over a period of about a year, and even then only in a few models.

A typical application is shown in the Stewart Warner R104 circuit shown in Fig.3. One notable user was expatriate New Zealander E.H. Scott, in his 1933 receiver. Arcturus valves were standard equipment in Scott's legendary deluxe receivers, and the blue valves looked very handsome against the chrome plated metalwork.

During 1932, a significant development in detector applications was the introduction of the type 55, 85 and later the 75 double diode triodes. Virtually three valves in one envelope, they could be used simultaneously for amplifying, detection and AGC, but with the advantages that the complications of a push-pull input were not essential and the diode detector could not be overloaded.

These advantages were too great for the Wunderlich to counter, and inevitably the more versatile diode triodes were the ultimate survivors.

Wunderlich substitutes

Although many valve manufacturers, including RCA, chose to ignore the Wunderlich valve, Sylvania and Ken-Rad did not. Sales of replacement valves were important and Sylvania had a policy of stocking 'a tube for every socket' — but naturally it would have resisted having to make any payment of royalties to Arcturus so could not have made direct copies.

Their solution appears to have been a series of double triodes that would be plug-in equivalents for the Wunderlich detectors. Only the anodes of these valves were common to both halves; the cathodes and grids were independent. They were, in reality, double triodes with their anodes and cathodes tied together.

There were five of these double triodes, and, having six-pin bases, they were replacements for the type A Wunderlichs. Three were from Sylvania, whose type 29 had a 2.5 volt heater and would have been equivalent to the Wunderlich A of Fig.1. Types 69 and 70 were similar but had different sized envelopes, and with 6.3 volt filaments would have been for car radios. Ken-Rad made the other two double triode Wunderlich alternatives. The type 90 had a 2.5 volt heater and the 92 a 6.3 volt.

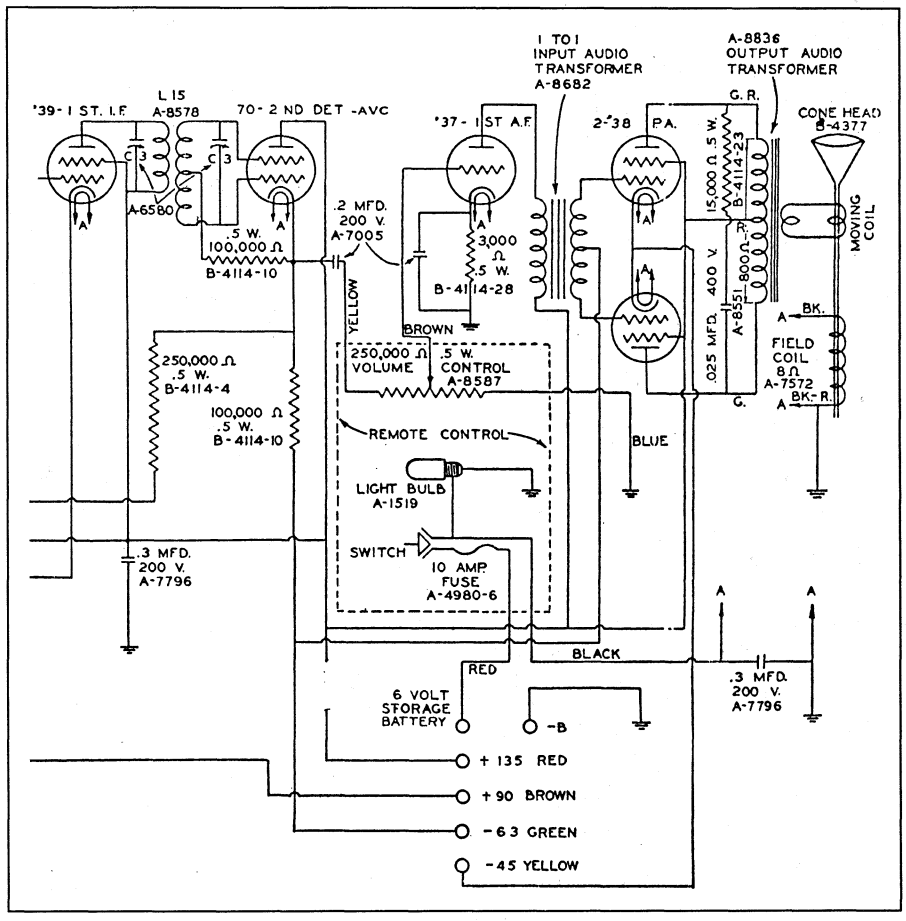

Fig.5: A sophisticated application of the dual-grid detector was in the Sparton model 34 car receiver, incorporating the Sylvania/Sparton type 70 — the only recorded instance of a dual detector triode other than the Wunderlich being used in commercial production. Here the 70 valve acts not only as a push-pull detector but also as an early example of a cathode follower, feeding the audio to the volume control and the negative AGC voltage to the IF and RF stages.

Sylvania's type 70 valve was sold as well under the Sparton label, and seems to have been the only Wunderlich equivalent ever to have been used in a production receiver. This was the detector and AGC amplifier in the Sparton model 34 car radio, the relevant part of the circuit being shown in Fig.5.

There is some irony in the fact that the Wunderlich valve would have been ideal for this unconventional application, with the functions of a balanced diode detector and DC amplifier for the AGC line. This was the type of application that the Wunderlich valve would have been very suited to, and it is unfortunate that it did not have more time to have been incorporated into specialist functions.

Had it been available a year earlier, it is possible that the Wunderlich would have become more widely accepted and further applications developed. Who knows — instead of the pentagrid, the screen grid Wunderlich may have become the first frequency converter valve. As it was, the Wunderlich quickly faded into oblivion and the diode-triode remained by far the most popular detector option for the following 30 years.

How good was it?

How well does a double grid leak detector perform? For an evaluation, I wired into a suitable receiver a general purpose double triode as a detector similar to that of the Stewart-Warner 140. It worked quite well, certainly much better than a conventional grid leak detector.

One type of transmission did upset it, though. This was a strong signal with heavy audio 'processing', an obnoxious practice indulged in by some AM radio stations to improve their coverage with positive overmodulation. Overall, the push-pull grid leak detector had no ad-

Crystal sets galore

History was recreated recently by enthusiastic members of the Vintage Radio Club of North East Victoria — many of whom were reliving their youthful experiments in radio. Fifteen crystal sets newly constructed by members were judged for the annual club achievement award.

The Hellier Award was established by the club to honour Les Hellier, the founder of 3WR, the first Australian country radio station. 3WR commenced transmission on 25 February 1925 in Wangaratta, NE Victoria, but moved to Shepparton in 1934, to later become 3SR Shepparton.

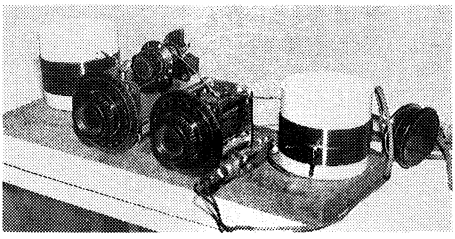

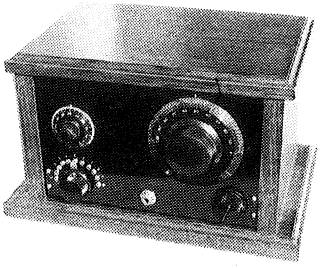

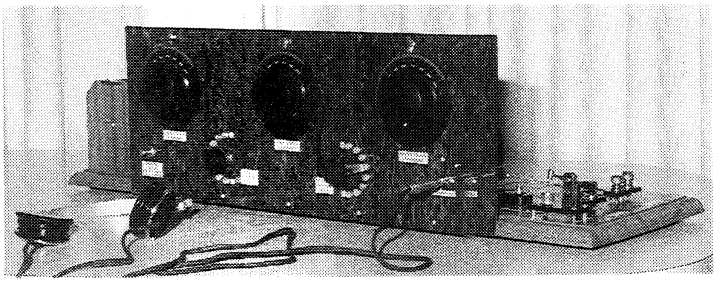

Top left is Harvey Utber's two-tuned-circuit model, which was a section winner. Top right is John Hill's set, which won a runner-up award for its high standard of construction and cabinet. Above is Bob Young's exhibit, described as the 'Harley Davidson' of crystal sets, which won the Vintage section.

Some of the crystal sets built were absolute labours of love, and would have been great talking points in the lounge rooms of the 1920's. A variety of designs were presented, from the very basic to those using multiple tuning circuits. There were also examples of first class cabinet work, to complement the construction.

Past President Bob Young has also recently prepared a book on crystal receivers.

The club meets monthly. Details are available from Ralph Robertson VK3CQK, on (058) 52 1372, or Bill Savage (057) 28 1485.

vantages over the more versatile conventional diode triode detector.

And finally...

We started off with comments about valve collecting. Recently, there were trade announcements indicating that transistors were in short supply, and reading between the lines it seems that in the future they will remain that way. Increasingly, transistors are being displaced by integrated circuits, just as 30 years ago, valves were steadily replaced by transistors.

Although a display of valves is more visually interesting, shouldn't we now be collecting transistors? History is repeating itself, and what is today still relatively commonplace will soon have disappeared. How long is it since you have handled a 2N217, or an OC75, or a 2N301? For that matter, when did you last buy a BC107? ❖