Vintage Radio

by ROGER JOHNSON

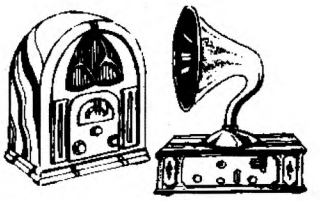

Making 'something from nothing'...

One of the real pleasures to be had from vintage radio is identifying an old chassis with a minimum of clues, and then trying to rebuild it. This month's story concerns just such a task, with a forlorn but interesting relic of the 1930's.

Recently an elderly and rather derelict chassis was presented to yours truly, because the donor didn't have the heart to chuck it out, and thought that it may be of some use for the few remaining components to be salvaged. My first reaction was that yet another derelict chassis was needed about as much as the proverbial 'hole in the head', but graciously I accepted the gift and the chassis remained in the heap with the rest of the 'waifs' for several months, until it was necessary to scrounge for some component or other to effect a repair.

Then I noticed that there was something about the chassis that had an appeal. Perhaps it *would* be worth resurrecting, but first I would have to identify it...

The only clues that could give any identification was a rather flourishing 'VR' penned on the cardboard dial, the 'ARTS & P' label on the back, an identification mark 'B17' followed by a serial number, and the valve types stencilled onto the cabbage green coloured chassis. Most of these markings can be seen in the accompanying photographs.

The valve types were types 32, 34, 32, 20 and 19 — all battery valves. The last number '19' also meant that it had push-pull output, because the 19 was a dual triode specifically made for push-pull class B audio output. This all dated the set at around 1934, and a five-valve battery set of this vintage with push-pull output could perhaps be a restorable proposition, even though there was no cabinet. (There still isn't!)

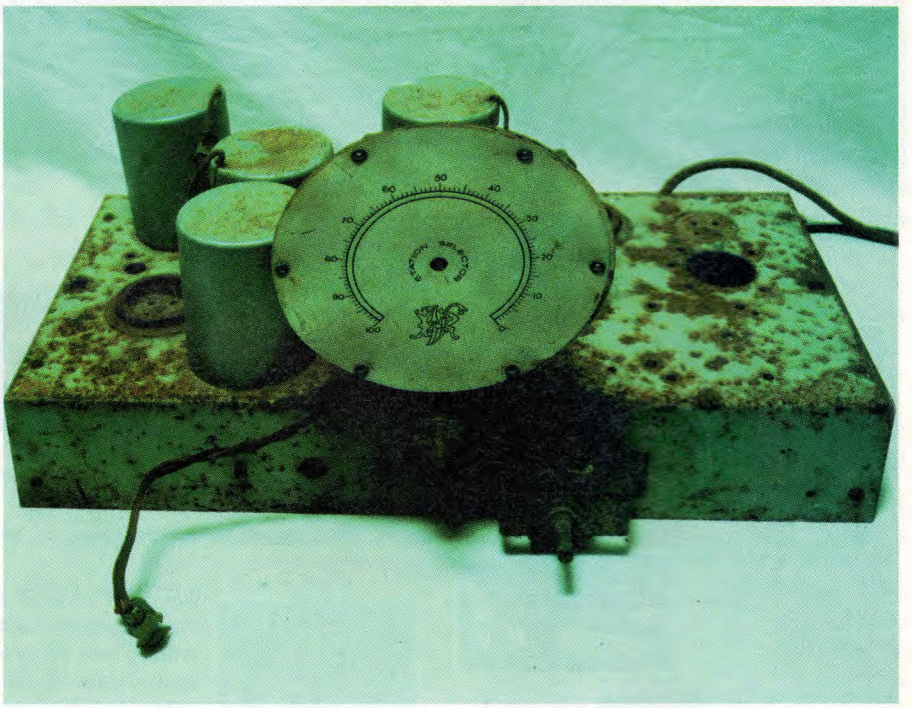

Fig.1: An overall view of the chassis of the 'mystery set', an Australian-made battery superhet of the mid 1930's. It was in a rather sorry state...

Identifying it

I received considerable help in identifying the chassis from Mr Daryl Kasch of Maryborough in Queensland, a member of the Historical Radio Society of Australia who has spent many hours photocopying practically everything that he can lay his hands on concerning radios of the pre-war period. He also has in his files copies of *Radio and Electrical Merchant*, newspaper advertisements of the day and most of the files of the HRSA.

For a very modest fee, Mr Kasch will offer to identify a chassis if he is provided with whatever information the inquirer may possess.

The information on my forlorn relic was despatched in due course, and a reply was eagerly anticipated. The reply came, but alas this particular chassis had defied his best efforts. However Mr Kasch did include some information from the *Radio and*

TILBURY & LEWIS PTY. LTD., Wangaratta Rd., Richmond, Vic. J5171. "VAN RUYTEN" Model 103. 5-valve superhet. 175 k/c, employs 34 Mixer, 32 I.F., 34 Det., 30 Driver, 19 Class B Output. "A" battery consumption 0.5 amp. at 2 volts from 40 A/H accumulator. "B" battery drain 7 to 11 m/A from three 45-volt triple capacity B batteries. Rola Permag. Speaker. Controls: Tuning, volume, battery switch. Piano finish console. £24/5/- (Vic. list), excluding batteries.

Fig.4: The small section of a listing of sets given in the July 27, 1934 issue of Radio and Electrical Merchant, describing the Van Ruyten chassis manufactured by Melbourne firm Tilbury & Lewis.

Electrical Merchant from 1934, giving a 'Directory of Australian Battery Operated Radio Receivers', and wished me luck.

As the chassis had come from Wimmera district, there was perhaps a possibility that it may have been a set made under contract for the Victorian Railways (hence the 'VR'), for use in the recreation areas of the fettlers' huts or carriages — if indeed such a radio had ever existed.

The information in the directory included the manufacturer, the model, a thumbnail technical description, the valve types, battery requirements and the list price, in VERY small type. Certain of the cabinets were illustrated. Not to be deterred, I decided to study all this information in case a match could be made and the identity of the chassis revealed...

Eureka!

Methodically I worked my way down the list, eventually reaching the T's to find: Tilbury & Lewis Pty Ltd, and the brand name 'Van Ruyten'. Here at last I found a description of the valve types which matched the orphaned chassis fairly well. At least the 'VR' on the dial now had some significance. To obtain a circuit should now be a mere formality, surely.

Not so. It appears that NO 'Van Ruyten' circuits were ever published — anywhere! Not only that, despite Van Ruyten sets appearing on the market with gusto in early 1934 and receiving encouraging reviews (Fig.4), they disappeared just as quickly about three years later. A photo in *Radio and Electrical Merchant* for April 12th, 1935 shows merely 'part' of the assembly line in Van Ruyten Margaret Street (Richmond), in a factory of no mean size. The assembly factory was separate again from the manufacturing plant, in which everything possible was made on site, including coils, transformers and chasses.

Remaining problem

What remained was a chassis with slightly conflicting valve types, a model number which was not evident or did not match the existing chassis markings, and a complete void regarding the smaller components. A true 'restoration' was therefore out of the question.

Perhaps, with some intelligent guesswork and using what was left, the chassis could be rebuilt to something approximating to the original. The intention is that at some future time a complete chassis might be unearthed, with which the project can be compared and the necessary alterations made.

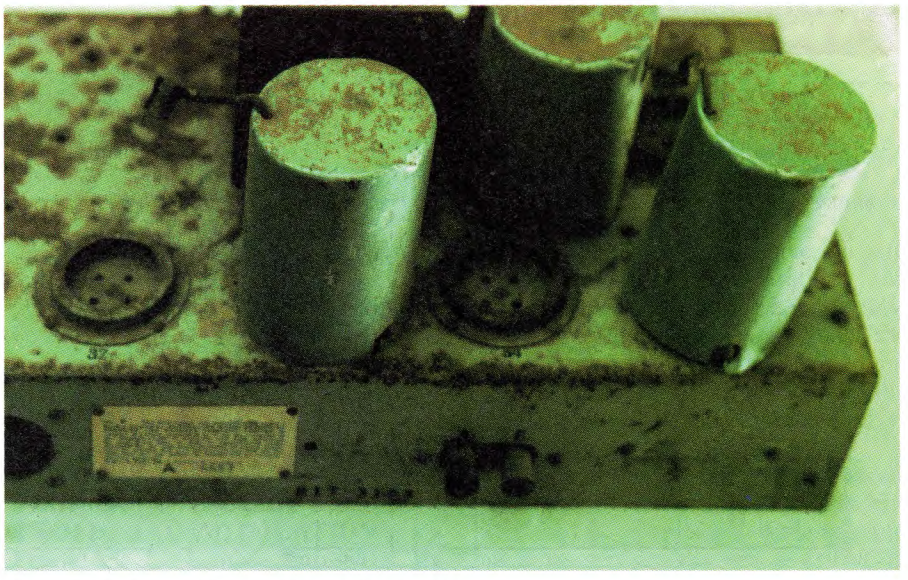

Fig.2: Visible in this closer view from the rear are the 'Arts & P' label and some of the other chassis markings — plus some of the rust and corrosion.

Fortunately the dial, the coils and the IF transformers are intact. Otherwise, the project would be pure guesswork, with absolutely no semblance to the original. Also intact were the battery cables and the switch. The 'A' battery pair was there in a rather faded red and black, attached to the ends of two very rusty battery clips. The other cable contained six leads, one of which went to the second pole of the on-off switch. The other pole of the switch was connected to 'A plus'.

This is significant. Very likely, a pair of nine-volt 'C' batteries were used, across which was connected a resistive voltage divider, and this would need to be switched to prevent premature flattening of those batteries. This was standard practice of the day.

Now a few thoughts regarding the valves. In one description, it is stated that the mixer is a type 34, the IF amplifier a type 32 and the detector type 34. On the other hand the chassis markings are for a type 34 IF amp, a type 32 as detector and no clear marking for the mixer. These markings are more likely to be correct. The type 34 is a variable-mu type, and the type 32 was designed as a bias detector/voltage amplifier.

The mixer could have been either type. The first assumption is that it would have been a type 32, which seemed to conform to other manufacturers' choice of a mixer-oscillator. The important thing is that this valve

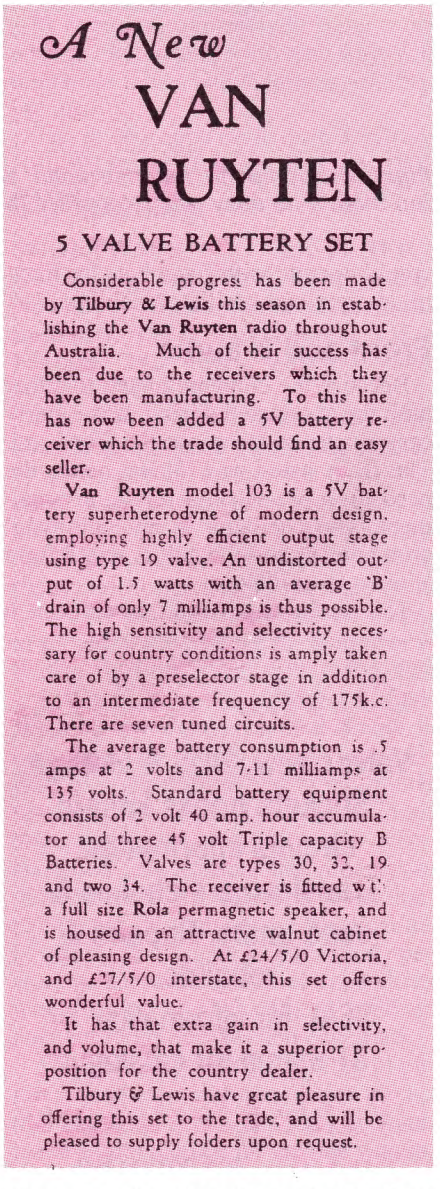

A New
VAN
RUYTEN

5 VALVE BATTERY SET

Considerable progress has been made by **Tilbury & Lewis** this season in establishing the **Van Ruyten** radio throughout Australia. Much of their success has been due to the receivers which they have been manufacturing. To this line has now been added a 5V battery receiver which the trade should find an easy seller.

Van Ruyten model 103 is a 5V battery superheterodyne of modern design, employing highly efficient output stage using type 19 valve. An undistorted output of 1.5 watts with an average 'B' drain of only 7 milliamps is thus possible. The high sensitivity and selectivity necessary for country conditions is amply taken care of by a preselector stage in addition to an intermediate frequency of 175k.c. There are seven tuned circuits.

The average battery consumption is .5 amps at 2 volts and 7·11 milliamps at 135 volts. Standard battery equipment consists of 2 volt 40 amp. hour accumulator and three 45 volt Triple capacity B Batteries. Valves are types 30, 32, 19 and two 34. The receiver is fitted with a full size **Rola** permagnetic speaker, and is housed in an attractive walnut cabinet of pleasing design. At £24/5/0 Victoria, and £27/5/0 interstate, this set offers wonderful value.

It has that extra gain in selectivity, and volume, that make it a superior proposition for the country dealer.

Tilbury & Lewis have great pleasure in offering this set to the trade, and will be pleased to supply folders upon request.

Fig.5: Another item from the Radio & Electrical Merchant for 1934, discussing Van Ruyten receivers.

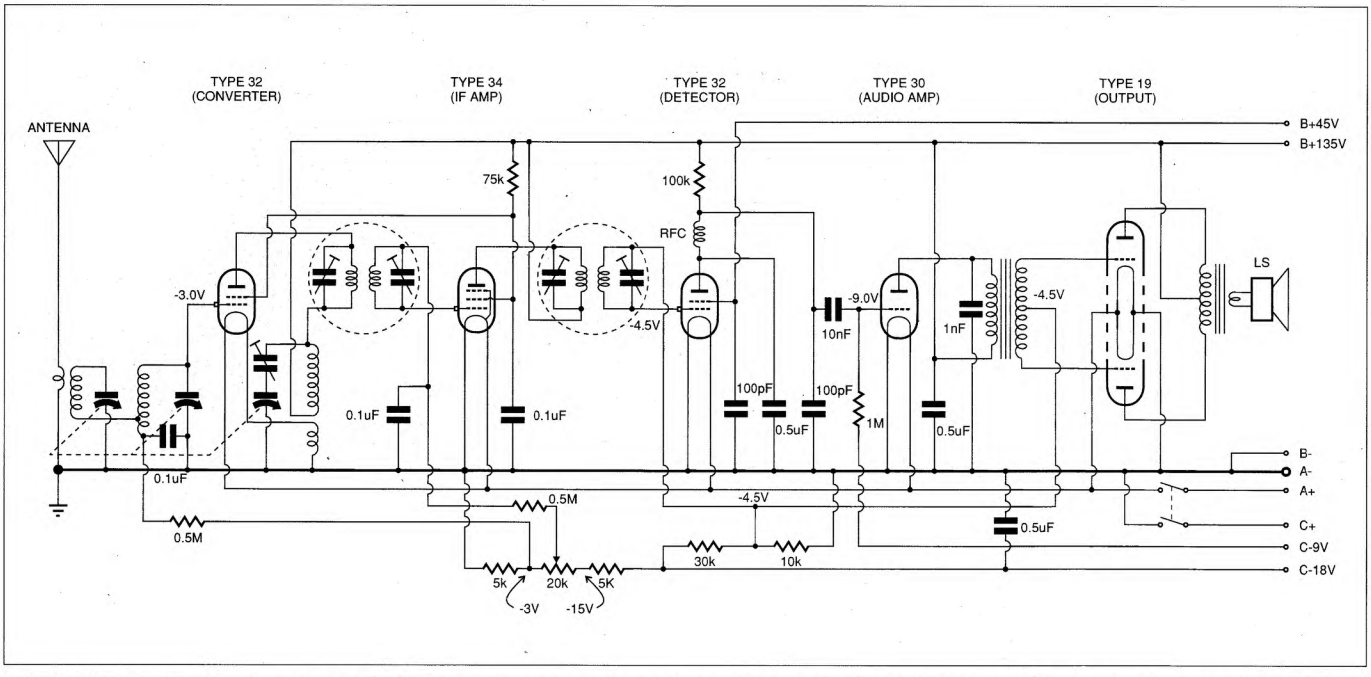

Fig.6: The complete 'reconstructed' circuit for the set, as discussed in the text. Hopefully it's quite close to the original, but there's no easy way to confirm this at present.

would operate with fixed bias for maximum gain and oscillator stability.

Front end & audio

Because the coils are intact, together with the associated wiring, it is a fairly easy matter to trace out the front end. The IF is stated as 175kHz, hence the need for a pre-selector tuning arrangement. The oscillator is an 'autodyne' arrangement and the coil is wired for a 'filadyne' oscillator.

The audio end would have been a type 30 voltage amp transformer-coupled to a type 19 operating in class B push-pull. There was really no other way, at the time, to obtain the drive and coupling to a type 19 output valve.

What about the screen voltages, grid bias and volume control scheme? In order to deduce the voltages it is necessary to refer to published valve data and use the clues provided by the manufacturer. Those clues are a 'B' battery consumption between seven and 11mA, and the fact that the set was provided with three heavy duty 45V batteries. This means that the mixer and IF amplifier could only draw 1.0 to 1.5mA each, the detector about 0.5mA, the audio driver between 2.0 and 2.5mA and the rest by the output valve under no-signal conditions.

The valve data for a type 34 states that with a screen voltage of 67.5 volts, -3.0 volts grid bias and 135 volts on the

(Continued on page 33)

Fig.3: There wasn't a great deal left under the chassis, either. With no published circuits available, this presents quite a challenge in terms of restoration.

(Continued from page 30)

plate, the valve draws a total of 3.8mA, which is in excess of the estimate stated above. One certain way to reduce plate current is to reduce the screen voltage. Valve tests indicate that if the screen voltage is reduced to 40 - 50V, the anode current is reduced to just over 1mA. Similar results are obtained for the type 32, which draws even less plate current.

It is not recommended practice to obtain the screen voltage for a single type 32 from a series dropping resistor, because of the very small amount of screen current drawn. However, if a dropping resistor was used to drop the screen voltage for both a 32 and a type 34 together, then that might be acceptable.

The second assumption is, then, that the screen voltage for the mixer and IF amp is via a common screen resistor of about 75kΩ. The screen voltage for the type 32 detector/amplifier would most likely have been from a 45V tap on the HT batteries. The current consumption is negligible, and in practical terms would have no effect on flattening that particular battery from where the tap is taken. The correct bias for a type 32 operating as an anode-bend detector is to adjust it such that the anode current under no-signal conditions is 0.2mA. More on that later.

As for the type 30 driver and type 19 output, the data recommends that the type 30 operates with a plate voltage of 135V and a grid bias of -9.0V. This would draw about enough anode current to meet the stated amount, so the fourth assumption is that the type 30 bias is -9.0V.

The type 19 output stage would need to operate at a bias of somewhere between -3.0 and -4.5V. The turns ratio of the input transformer from primary to each half-secondary is stated as 2.66:1. The type 30 detector would need -4.5V bias, which could be taken from the same source as that for the output valve.

The volume control would probably have been via a potentiometer varying the grid voltage to the type 34, within the range -3.0 to -18.0V. The grid voltages would largely be obtained by a voltage divider network across the 'C' battery, thereby requiring that battery to be switched.

With a sprinkling of bypass capacitors, RF chokes and an anode load for the type 32 of a stated value of 100kΩ, a coupling capacitor and grid leak, we now have the complete reconstructed circuit as shown in Fig.6.

The six battery leads, apart from the 2.0 volt filament leads, are disposed of as (1) B+ 135V; (2) B+ 45V; (3) B-; (4) C+ (switched); (5) C- 9.0V; and (6) C- 18.0V. The drain on the C batteries has been calculated to be about 1mA. The values of the bypass capacitors have been assumed, in conformity with practices of the day.

There we are! What seemed to be nothing more than a candidate for the trash can has been a source of pleasure, sleuthing out a rather unusual circuit. It also demonstrates that with a little diligence, it is possible to create something out of virtually nothing. All that remains now is to see if the beastie actually works! As was previously stated, this cannot be classed as a true 'restoration' in that there is nothing with which to compare it.

Mind you, if there's anyone who has one of these sets and would be kind enough to draw out the original circuit, this would be greatly appreciated by the author — for obvious reasons. I don't suppose anyone out there might have a surplus cabinet, as well?

Oh well, it was worth a try! See you next month. ❖