# Vintage Radio

by Roger Johnson

# Radios 'On the Road'

**Cars have had radios as a standard fitting for nearly 30 years, and most cars of the 1950s and 60s had at least provision for a radio. Prior to that, car radios were not common, but as we'll see they certainly existed.**

These days we don't have just a car radio; we have a multi-function entertainment centre with digital displays, automatic searching and the like. Thirty years ago we had transistorised AM-band radios only, and for about a decade prior to that we had the radios with a special series of valves requiring merely 12V for their anode potential, thereby eliminating the need for a separate high tension power supply.

From about 1935 to about 1956 or so, car radios operated with standard valves. The car's internal DC system was used to power the heaters, and 6.3V or 12.6V valves were chosen as applicable for a given car. The high tension voltage usually came from a vibrator power supply. In order to obviate the need for specific polarity of the input, a non-synchronous vibrator was used in conjunction with a valve rectifier.

So, just when *were* radios fitted to cars — 1935? Would you say earlier, in the case of expensive types such as Cadillac, Packard, Lincoln and Rolls-Royce?

In fact the earliest reference to a radio actually fitted to a car by the manufacturers, as standard equipment, was in 1930. Yes, the American firm of Jordan fitted radios as standard equipment to their somewhat appropriately named 'Playboy' model!

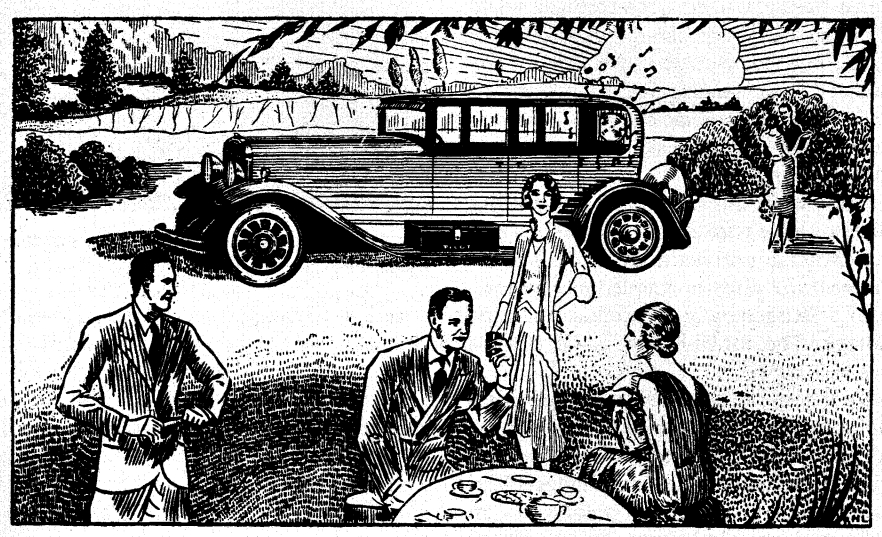


*Fig.2: An early US advertisement for the 'Auto Pilot'. Note the speaker, the radio (on the running board) and the fact that a sedan car is shown.*

## The very early cars

For those people able to afford a car *and* a radio, mobile entertainment was most likely in the form of a battery portable wireless set, which was really only much good when the car had stopped.

By 1930, the Chrysler corporation had wired their brand of cars for the provision of radio. This amounted to little more than ignition suppression, and enough space on the instrument panel (i.e. the 'dashboard') for provision of the dial mechanism and controls. In other words, they were designed for a radio to be incorporated with minimum effort.

In Australia, prior to 1930, the vast majority of cars were touring cars — that is, cars with a collapsible hood made from a rubberised canvas compound. The Americans, on the other hand, produced closed cars, or sedan cars, at a much sooner date than their popularity in Australia. Why is this significant?

It is for the simple reason of noise! Anyone who has had a ride in, or driven a vintage car, will understand what is meant. The open 'tourers' as they were called, were subject to an enormous amount of road noise — together with a barely adequate exhaust system. All this added up to a vast amount of ambient noise. It is difficult to converse with a passenger; one almost needs to shout. A closed car, or 'sedan' was much quieter by comparison, and was therefore more conducive to the installation of a radio. This is important for another reason, which we shall see.

## Early installations

A search of the literature tells an amazing story. The standard procedure, it seems, was to hang a 'reproducer' (the loudspeaker) from the hood bows. The photo of Fig.1 shows a facsimile installation of an Amplion AC2, installed in a vintage car exactly as described in the early literature. In the US advertisement for the 'Auto Pilot' in Fig.2, the speaker can be seen hanging in the rear quarter-window.

However a more typical installation is shown in Fig.3, taken from the *Official Radio Service Manual 1930* as reprinted by Vestal Press of New York. As can be seen, in 1930 a section of the service manual was devoted to automobile installations. Interestingly, the diagrams of the engine components show

eight-cylinder engines. The 1930s in America were the era of the 'straight-eight' or eight cylinder in-line engines.

In the illustration in Fig.3 we see an installation not unlike cars of two decades hence. That is, the radio and speaker are mounted under the dashboard. Note the position of the car's battery. The battery was placed under the seat or under the floorboards adjacent to the passenger's feet, from those early times until almost the war years.

## Power supplies

The 'B' or high-tension (HT) voltage for the valve anodes was supplied from dry batteries which were placed in a compartment under the front seat, much like the illustration, or placed in a home-made timber battery box mounted on the running board. Another possibility was to house the batteries in the luggage 'trunk', or to make a compartment beneath the rear seat.

In the early 30s the use of external dry batteries gave way to 'genemotors' — that is, a DC motor driven from the car's internal electrics, directly coupled mechanically to a DC generator to produce the high voltage. The efficiency of such devices was 50 - 60%.

By the mid to later 1930s, the genemotor gave way to the vibrator power supply. (Vibrators and vibrator-powered radios will be the subject of future articles). That same type of HT power supply was in vogue right up until about the late 1950s, when the newly designed low potential valves were used.

As far as ignition suppression is concerned, there is little departure from the standard techniques employed up until about 25 years ago, when practically all cars had distributor-and-points ignition systems in conjunction with the 'coil' (really a transformer). That is, a suppressor resistor of about 15k in each of the high tension leads from the distributor to the spark plugs, and a capacitor from the battery terminal of the coil to ground.

A small amount of energy from the high voltage winding is induced in the low voltage coil winding during the sparking process. This causes small spikes to appear in the car's electrical system, which then appear at the heaters of the valves, causing the familiar interference. The capacitor bypasses these spikes to ground.

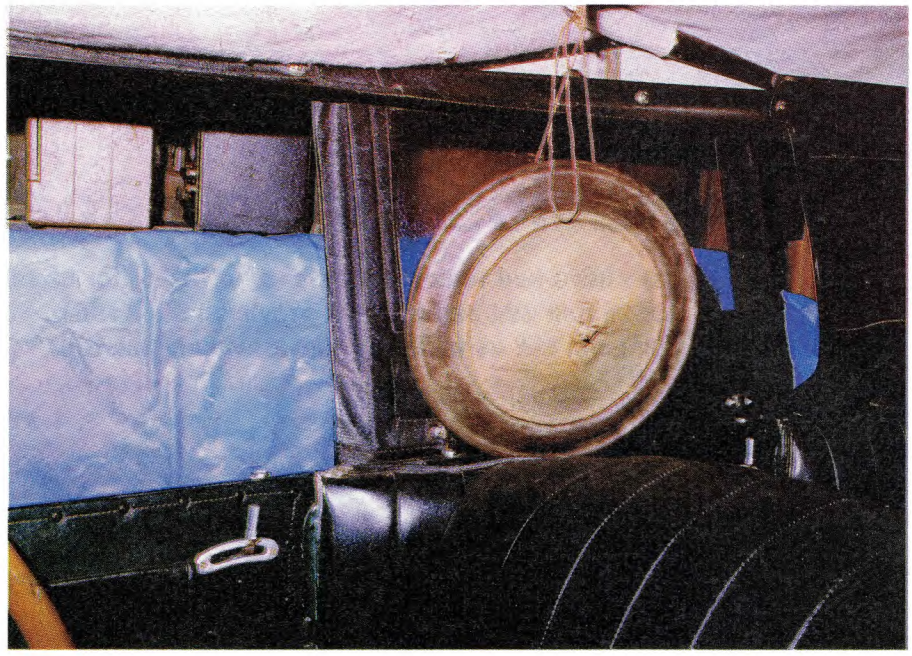

*Fig.1: This was the recommended practice for fitting the speaker in early car radio installations.*

## Antenna systems

From the port-war era to the 1970s, car radios used the familiar telescopic vertical antenna which was generally mounted on the front fender. Prior to that, there were any number of weird and wonderful devices.

To understand how some of these systems worked, we must first understand a little about how cars were built. Up until about 1930-2, practically all car bodies — particularly Australian made ones — consisted of a timber frame (yes, timber!), over which was nailed the sheet metal 'skin'. This technique was applied to the doors as well.

Even so, there was generally a patch in the roof which was not metal covered, but rather covered with the rubberised canvas compound previously referred to. Even when car bodies were made of all metal, and the timber framework was almost entirely eliminated, the patch in the roof still existed as before. It was not until 1937, when new sophisticated presses had been developed, that the 'all metal' car body as we know it today finally arrived.

How does this history lesson relate to antenna systems? The antenna was often simply installed in the 'roof timbers', between the

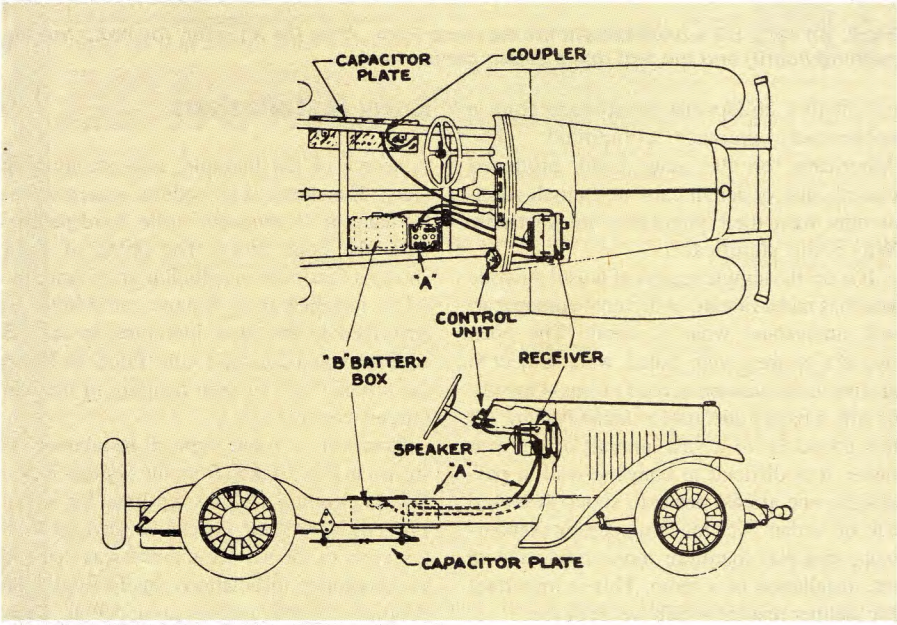


*Fig.3: Diagrams for installing radios in cars in the early 30s.*

head lining and the outer fabric covering!

Until 1938, most cars had running boards, and another method was to string the antenna wire underneath the running board; but this system had its obvious drawbacks.

Another weird and wonderful system was to somehow secure a small mast, about 12" (30cm) in height, on the roof adjacent to the apex of the front windscreen — and then trail two antenna wires from the top of this little mast back to the end of the roof gutter on each side of the car. The result was a 'V' antenna.

One of the more popular systems was to mount a fixed rod on standoff rubber insulators vertically on the cowl.

## The 'Auto Pilot'

One of the first commercially built car radios was made by the American 'Pilot Radio and Tube Corp' — the same company who developed the successful 'Super Wasp' short wave radios. Not surprisingly, it is called the 'Auto Pilot'.

This radio was developed in 1930 as a kit set, housed in a sturdy metal cabinet for mounting to the running board of a car, and with remote controls for mounting conveniently inside the car. The speaker is as previously described, and the high tension voltage is obtained from 135 volt bank of dry batteries conveniently located elsewhere in the car. The circuit is shown in Fig.4.

As you can see, it is a TRF set comprising four type P224A's, a type P227 driver and a type P245 triode output. All tubes are 'Pilotrons' — of course — and there are no prizes for guessing the equivalent types!

The circuit is unbelievably simple, comprising the tuning components, two block capacitors and only seven other fixed components. Volume control is effected by varying the screen voltage of the RF amplifiers. The screen potential of the anode-bend detector is tied to the type 227 cathode, thus placing it at about 4 - 5V.

Another curiosity of this circuit is the inclusion of a grid bias battery in the cathode circuit of the first three RF amplifiers. Whilst this allows for the full high tension to be applied between anode and cathode, one wonders if a mere 1.5 extra volts in a 135 volt supply is going to make one scrap of difference. Surely a cathode resistor and bypass capacitor would have been more convenient?

The grid bias battery for the 245 output valve was also housed inside the case. Total HT drain is stated at 20mA, which is hefty enough even for large capacity batteries.

Finally, we come to the heater circuit, where the valves are connected in a series-parallel network across the accumulator.

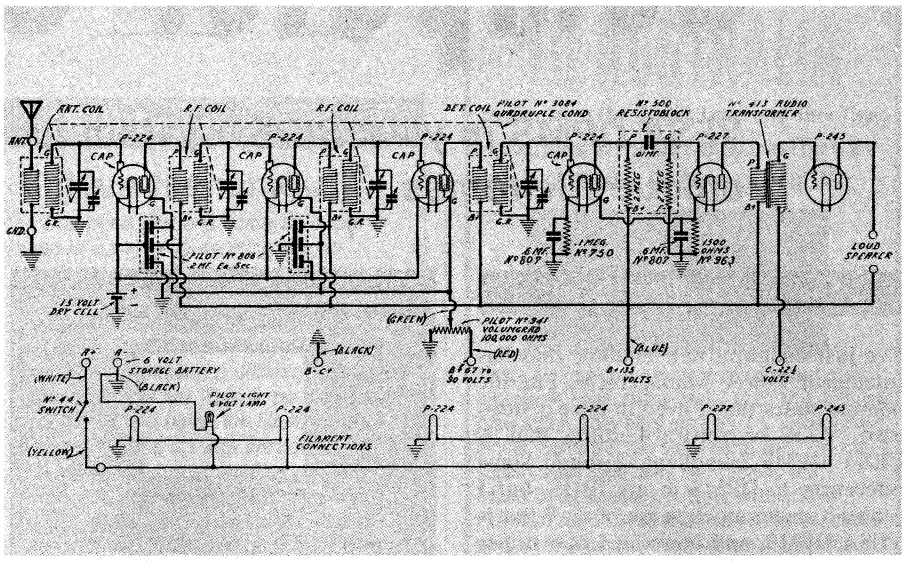


*Fig.4: The circuit of the Auto-Pilot.*

**Important Notice**

**For your own safety and the safety of other drivers, we strongly recommend that you use your automobile radio receiver only when the car is stationary. With road conditions the way they usually are, you should concentrate on driving, and you should not have your attention distracted by musical programs or talks while the car is in motion. For this reason, no provisions have been made in the Pilot "Auto Radio" for the suppression of interference from the ignition system. To prevent a wave of accidents, it is likely that State legislatures will make radio-ing-while-you-drive illegal.**

*Fig.5: A warning by John Geloso, Pilot's chief engineer at the time.*

Now a 6V accumulator undergoing charge will read up to 7V across the terminals, which means that the heaters would be driven at 3.5 volts instead of the rated 2.5 volts — far too hard for reliable life.

Why then did they do it this way? Simple; the radio wasn't supposed to be operated while the car was being driven! A 6V accumulator under this sort of load in a discharging state will probably read about 5.8V across the terminals, which means the heaters are being driven at a more sedate 2.7 volts, allowing for a fraction of a voltage drop within the wiring.

There is no doubt that this circuit would be quite selective and sensitive as well. It would need to be.

What was the antenna for an Auto-Pilot? Wait for this: a piece of wire strung between the front and rear axles! Audio output would have only been about half a watt, and the recommended speaker, available as an add-on extra, measuring 8-7/8" diameter and 3-3/4" thick, was said to be 'designed especially for the job'.

Most of this material about the Auto Pilot came from a somewhat obscure publication called *Radio Design — Official Organ of the Radio International Guild*. The description and coverage is quite comprehensive. I wonder if there are any of these particular sets in Australia?

In future articles we'll look at the superhet car radios powered by genemotors and vibrators. ❖