Vintage Radio

The Raycophone 41E: a rare Australian 'cathedral'

The 'cathedral' style of tabletop radio cabinet rose to fame in the USA. Only a few Australian firms made a foray into this style — amongst them Raycophone with its 41E, which can also claim to be a true classic.

JUST WHAT defines a 'classic' can be debated, of course, but the elements must surely involve conforming to the technology of the day — well built, an individual style and receiving public acclaim. In this regard the Raycophone 41E surely qualifies. I'm not sure if the 41E was a public favourite in its day, but the cathedral style is certainly very popular nowadays amongst collectors, most of whom aspire to have an example in their collection.

The name Raycophone comes from the name of the firm's founder and notable engineer, Raymond Cottam Allsop, who did much to develop sound installations for movie theatres of the late 1920s, and also pioneered FM broadcasting in this country. From 1930 until about 1935, the company produced a reasonable range of radios of which, it seems, the 41E is/was the only true arch-topped 'cathedral' cabinet. Perhaps the decision to enter the domestic manufacturing marked was prompted by the new tariff protection for locally made receivers.

(Further information about Ray Allsop can be found in the late Neville Williams' column 'When I think Back', in *EA* for January 1990).

The cabinet

The cabinet is actually very stylish, and one of the first thing that one notices is its weight. It is constructed on a routed-edge timber base, which is fully 1" (25mm) thick. Screwed to this are the lower half of the two sides, which are cut from substantial seven-ply and a good 3/8" thick themselves. The top of the cabinet is formed from curved lightweight three-ply, joined at the apex. Beneath this join on the inside of the cabinet is a timber support. The joins at the apex and the sides are externally covered with a decorative moulding.

The front is also made from plywood, and is covered in a quality 'mirror image' veneer. That is to say the veneer is split and joined down the centre line, such that the two sides are a mirror image of each other. A fluted column surmounted by a decorative bell covers the join of the front and the lower sides, whilst the daintiest beaded chain and a rosette cover the top-half joint. The bells, beads and rosette appear to be made from a compressed and moulded arborous product — perhaps a papier mache mixed with a setting resin?

Fig.1: A contemporary advertisement for the Raycophone 41E, from Wireless World for May 15, 1931.

A most unusual 'art-nouveau' style speaker fret completes the front. There are but two controls, one atop the other, both of which are directly beneath the very small dial escutcheon. At the rear of the cabinet a shaped timber brace reinforces the sides and the top in order to keep it all together.

The similarity between this cabinet and the American 'Colonial' illustrated on the front cover of John Stokes' *More Golden Age of Radio* (Craigs, New Zealand 1990) is too close for coincidence. The advertisement which appeared in *Wireless Weekly* for May 15th, 1931 (Fig.1) and the accompanying photo (Fig.2) clearly show the cabinet.

The circuit

A published circuit has not been obtained, which is not surprising since not that many were available prior to about 1933. The circuit shown in Fig.3 was traced by the author from a slightly modified chassis, and the HT filtering setup has been assumed.

As can be seen, it is a three-stage TRF using type 224-A's, with a type 245 triode output in keeping with the practice of the day.

Starting from the front end, there is the customary two-position antenna connection via a tapping on the primary of the coil. The two tuned RF stages are then fed into a tuned leaky-grid detector stage, which is then coupled via an LC filter to the output stage. (It should be noted that this set was produced during the era when direct coupling was fashionable.)

The anode load of the detector is formed by an audio choke. This was common practice with the old 24A's. The choke of about 30 Henries inductance offers a substantial impedance at audio frequencies, but offers little DC resistance to the valve's HT current. This means that the anode can operate at a decidedly higher voltage than would be the case with the usual 250kΩ anode load resistor, allowing higher gain.

Cathode bias is used throughout. The cathode resistors for the RF and detector stages are physically part of the 'voltage divider' — which in the set shown had only two out of the six segments that were open circuit(!). The cathode resistor for the directly heated 245 is from the centre-tap of

by Roger Johnson

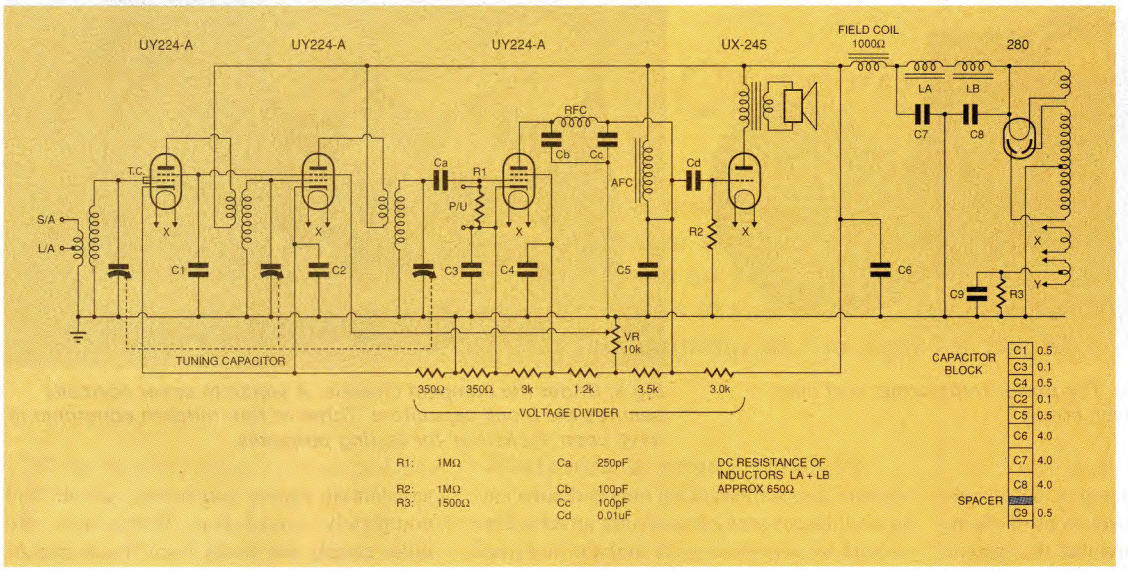

Fig.3: The circuit, as traced by the author. The areas of doubt in terms of authenticity are discussed in the text.

its heater winding and bypassed by a 0.5uF or 1uF paper capacitor to earth; again standard practice for the day.

The detector stage

A grid leak detector is somewhat unusual for a set with two screen-grid (tetrode) stages of RF amplification. Conventional wisdom says that this amount of gain will cause leaky grid detection to overload and distort, because it is being driven too hard, and that the 'anode bend' detector should be preferred. However the designers have attempted to overcome this complication by operating the detector stage in true class-A mode, and returning the grid leak to the cathode.

The normal trick was to operate the detector stage at zero bias with low anode potential. This sacrificed gain for sensitivity, which was a desirable feature in the simple single circuit regenerative detectors.

As you can see there was provision for a pickup, and once again the designers have got it right by placing the input directly across the grid leak — i.e., from grid to cathode. This allows the valve to operate in true class-A condition and at its most favourable voltages for maximum gain.

The normal practice of placing the pickup between grid and earth in the anode bend detectors was an appalling piece of design, which was unfortunately adopted by far too many set designers. In this mode, the anode bend valve was biased almost to cutoff.

When an audio signal from a pickup was applied without any attempt at correcting the cathode bias, the resultant signal was severely distorted. However, such was the 'gimmickry' of the day that the public was largely unsuspecting, and set manufacturers were able to get away with poor design practice and the resultant cost savings in components and switching...

Fig.2: Awaiting full restoration is the very stylish 'cathedral' style cabinet...

Volume control

Volume control is achieved by varying the screen grid potential on the first two stages. This set must have been designed ahead of the release of the variable-mu type 235, which was available in 1931. (Refer to Neville Williams' 'When I Think Back' column, *EA* September 1991).

Volume control by varying the screen voltage was not particularly common in all-electric sets, but by no means rare. It was often used in the early screen-grid battery sets, prior to the introduction of the variable-mu type (2)34.

However the 224-A did have a tendency to become unstable when the combination of screen and anode voltages fell below certain critical values. In this particular receiver, it is not a problem, since the screen voltages even at minimal volume setting is within the range for stability.

HT and filtering

When the receiver shown was first discovered, the speaker had absolutely 'had it'. The frame was rusted, the remaining quarter of the cone was stuck fast, the field coil was open circuit and so were both windings of

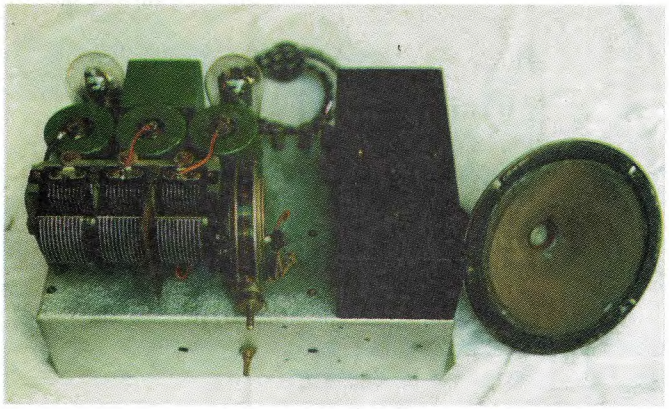

Fig.4: Above the chassis. The power transformer and filter chokes are under the black cover.

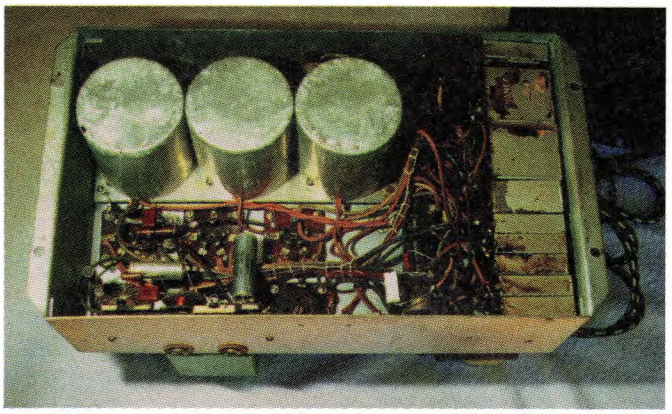

Fig.5: Under the compact chassis. A separate cover normally secures the block capacitors. Three or four modern components have been 'tacked-in' for testing purposes.

the transformer. Two of the four wires were in fact disconnected. (There is no isolating speaker plug, which means that the speaker is permanently tethered to the chassis.) Under the chassis was a bogus filter choke that was obviously a ring-in.

The three paper filter capacitors were connected each side of the twin filter chokes, forming a double capacitor-input filter. All of this wiring appeared to be undisturbed, but the wiring from the rectifier cathode was missing. One possibility was that the speaker field is/was a 7500 or 10,000 ohm winding placed in shunt across the HT supply for regulation purposes. However, if this were so it would be already shunting the 10kΩ voltage divider, resulting in a shunt load of less than 5kΩ. As this would have resulted in an HT drain of some 50mA in itself, it seems unlikely.

A standard 'Rola' type K8 1000Ω field coil speaker has been pressed into service, and has been wired in the conventual way. The output voltage is close enough to 'spot on'.

As there appeared to be no missing filter capacitor, how was the speaker wired in circuit? Initially, it was wired in as a three stage choke-input filter. However, the output voltage was way too low, merely about 180 volts. Tacking a 1uF paper capacitor from rectifier cathode to earth brought the HT up to a more acceptable 230 or so volts. This can be seen in the underchassis photos, in Fig.5.

So here we have the restorer's dilemma: just what is the right thing to do? As there was no evidence of a missing filter capacitor, I decided to use the three capacitors as an input capacitor and two filter capacitors each side of the two chokes in series, acting as one.

Restoration

The set is beautifully made. The chassis is made of heavy gauge spot-welded mild steel. The small securing nuts and bolts survived the ravages of corrosion attacks. One squirt of penetrating oil and the nuts and bolts were easily unscrewed. Not one of them snapped, and they all cleaned up like new. The electroplating must have been of a very high quality.

Despite the metal cover of the power supply being rusted, the power transformer, filter chokes and audio choke were all intact. This was considered a real bonus.

The paper capacitors all proved to be leaky and way off value. Here there is no choice. The little metal cans were opened, the guts ripped out, and a modern capacitor inserted in their place. The typical value for the three filter capacitors is 4uF paper, and fortunately some high voltage 4.7uF electrolytics were on hand, which were near enough. The other bypass capacitors were typically 0.1uF, 0.5uF or 1uF, and here 0.47uF greencaps were the logical choice.

Apart from the voltage divider, there are only three fixed resistors; the two grid leaks and the cathode bias resistor for the type 245 output valve. The volume control was an old wire wound type — open circuit of course, but estimated to be 10kΩ. A suitable replacement was found and it seems to provide satisfactory control.

Once the circuit was traced, the chassis was stripped completely, grit blasted, primed and painted silver. It now looked the part.

The aluminium valve cans had suffered a little corrosion. These were thoroughly cleaned with steel wool, etch primed and painted a suitable dark green, typical of the era. The audio choke was painted to match. The power supply cover also had the rust removal treatment and was finished off in black wrinkle paint. Again this was typical of the day.

The most onerous task was repairing the substantial tuning capacitor, which had completely seized fast. Worse still, the outer casing was made from 'muck metal' or zinc diecast. (There is a good argument to ban this stuff on humanitarian grounds alone!) The centre shaft is only bushed; there is no ball bearing race.

With copious amounts of penetrating oil and gentle pressure over the course of several days, it finally came free. A similar regime had to be applied to the dial mechanism, which had also stuck fast — but fortunately the brackets were stamped from steel, and a little more exertion could be applied.

Performance

The set's performance is not particularly good. The tuning coils are simple solenoids wound with double silk(?) covered plain copper wire. Perhaps the 'Q' is down, due to the ravages of time and the ingress of minute amounts of moisture. Tuning is unnecessarily broad, and only by manipulation of antenna length and connection — and very careful alignment — is it able to pass the empirical test of separating two adjacent local stations on 1323 and 1397kHz.

With only a triode output delivering just under two watts maximum, the audio is not overpowerful, particularly when careful alignment had to sacrifice a little gain for the purposes of selectivity. However, the audio was quite 'clean', and in case anyone is wondering I could discern absolutely no difference between the quality of the triode output and a set of similar vintage using a pentode type 247!

Unfortunately, after about 20 minutes of operation the power transformer had become not just warm, but HOT. Oh well, what is a mere power transformer rewind in the overall scheme of things? A bloody nuisance, that's what! ❖