Vintage Radio

BY ROGER JOHNSON

The year that was — 1928

At the end of my 'the year that was' article for 1927, I wrote that 1928 was a radically different year. It was, but 1928 was a case of 'more haste less speed' because although there were plenty of changes, there were also plenty that remained the same!

IN FACT THERE were two periods in the 1920s when there was not a lot of change; 1925 - 26 was one period, while 1927 - 28 was the other. There are features common to both those periods which makes it almost impossible, unless there is other supporting evidence, to identify a given radio as a 1925 or 1926 model, and similarly as a 1927 or 1928 model.

Once again resource material was a little scant for 1928, but I've managed to find enough to give an overall impression of the year. To begin, let's look at the things that *didn't* change much from 1927 to 1928.

Firstly, sets for the home constructor were still all-triode battery sets — some neutralised, some not — but with filament rheostats for the RF stage or stages, and individual tuning capacitors for the required number of stages. We therefore often had three-dial tuning, which together with the rheostats, meant that tuning required knowledge, dexterity and skill. Tuning 'the wireless' was definitely still the man's department!

Not only were there circuits for 'three-diallers' and the like, but for example the September 5 issue of *The Listener In* gives the circuit for a 'Browning Drake' set in a most handsome tapered-leg table cabinet, described for the home constructor. This circuit could almost have been regarded as obsolete in 1928, for there were advances in other fields, and by then the circuit was three years old.

Next, coil kits were being sold by 'Radiokes' for the neutrodyne and Reinartz radio circuits. The coils as advertised were similar to those already illustrated in previous 'snapshot years', with the exception that there were other manufacturers producing ready wound coils, and the Radiokes Reinartz coil was still wound on a 3" former and placed in an enormous metal can!

Fig.2: The beginning of the end — a Harringtons battery five valver circa 1928, without neutralising but with ganged 'single knob' tuning...

Also, the usual run of bright emitter valves by Ediswan and Mullard were now being offered very cheaply, for as low as 3/- to 5/- each.

The large stores such as Hartleys, Mick Simmons and United Distributors were selling two- and three-valve battery triode radios, capable of loudspeaker operation, complete with valves and other accessories for very modest sums indeed — priced between £5 and £6, or merely *one* week's wages. The speaker was still regarded as an 'extra'. Philips were still marketing their popular and well performing 'PCJJ' range of speakers.

Finally, there were those listeners and readers who still preferred crystal detection above all others, and the correspondence pages of the wireless magazines contained no shortage of requests for selective crystal sets followed by a valve amplifier, or valve radios using a crystal detector. Some habits died hard!

Screen grid valves

It's true to say, though, that 1928 marked the introduction of the screen grid valve. The term 'screen grid' has been especially chosen here to reflect the nomenclature of the day. They were not regarded as tetrodes, nor pentodes (which in RF stages they were not).

The first such valve on the scene is generally regarded as the Marconi S625, with its unusual double-ended construction. It is illustrated in Fig.1. As you can see, it is intended for horizontal mounting, and has socket connections at both ends. Soon after the Osram S210 (2V), S410 (4V) and S625 (6V) were all released for battery operation, and together with the other brands, had the

more conventional shape with the top cap anode connection.

Note that Marconi and Osram *both* had a type S625. These are quite different valves, despite the same type number!

This is a very clear example of what was to become a bit of a problem: the numbering systems adopted by European manufacturers. Each manufacturer had its own system, and when quoting a valve number it was necessary to know the manufacturer as well. (In contrast, the American valve manufacturers had a uniform numbering system from the early 1920s, adopted by all manufacturers)

Cossor released their 215SG for their 'Melody Maker' kit set radio. Philips also released the A442, and Mullard the PM12 and PM14, in the same year.

Fig.3: The 'Centurion Phono & Radio' — a combination radio and electric gramophone in its massive 'dinosaur' cabinet. (Listener In, September 19, 1928)

US valve types

Although the US valve types 226 and 227 were generally regarded as having been released in 1927, there appears to be little reference to them in either 1927 or 1928 as available for the home constructor in Australia. However they must have well and truly been in the country, because the advertisements for 'King' and 'Crosley' and other popular US brands were aplenty, and all of these sets were powered with 226s as RF and audio amps, a single 227 detector, a UX171A audio output and a type 280 rectifier.

But there *was* mention of the new UX171A for home construction, and believe it or not, a UX200A was discussed in the 'Tested by Us' column in *The Listener In* for February 15th 1928. The 171A is understandable, but the UX200A was apparently the first of the re-released UV200. This does seem rather surprising, as the UX201A had replaced the UX201 by about 1925.

Also released were the Marconi Osram DEL-410 and DEP-410, which were used exclusively in the AWA Radiola models for several years. Philips released their power triodes B409, B405 and B403, which incidentally were suitable for AC operation as well as DC, and in the six volt range, the B605 and C603. The C603 has a 6V filament but is in every other way identical to the 171A, which required only 5V on the filament.

There was some literature that claimed they were interchangeable. This would be unwise, particularly today when such valves are scarce. Running a 171A on 6V would seriously compromise what remaining life it has left!

Another AC type power valve which was mentioned was the type 210, which was popular for the 'final' amplifier stage in amateur transmitting equipment.

Philips also released the types A225, A425 and A630, which were specially designed for resistance coupling. Philips and 'Lissen' released special 'resistance coupling units' which contained an anode load resistor, coupling capacitor and grid leak, wired and assembled into a single container with four terminals — corresponding to the terminals on a coupling transformer (P, B, G and F).

Later in the year, Philips released their 'power penthode' (sic) type B443. This was initially released with a UX base, with the screen connection via a grub screw connector at the top of the base. This was done so that it could be merely plugged into an already existing UX socket without major rewiring. It was later released in versions with UY and B5 bases as well.

Loudspeakers

When it comes to loudspeakers, one thing seems very apparent from the literature: the horn speaker was well and truly on the way out. The new 'cone speakers' received the saturation advertising, with the old horn speakers being relegated to the 'clearance sale' category with prices slashed.

The brands which received prominent billing were Celestion, Amplion (of course), Stromberg Carlson, Operadio (though not strictly a cone speaker, but a successor to the horn), the RCA 100A and the Magnavox. Speaking of Magnavox, they released their first electrodynamic speaker in 1928. These sturdy and expensive units came complete with their own power supply, and two models had to be plugged separately into the mains for their operation.

One model had a high voltage transformer and a copper/copper oxide rectifier, in which the field coil was the complete load. Others had a low-voltage field excitation coil which operated from a six volt accumulator — and if the advertisement is to believed, drew a staggering 65 amps! (Of course 0.65 amps is

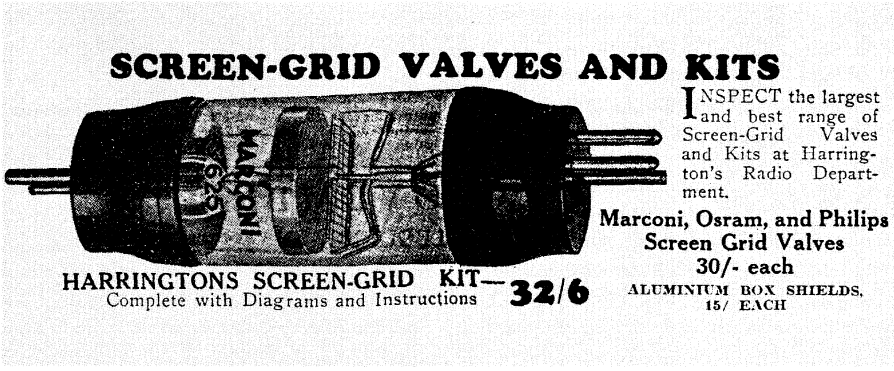

Fig.1: An advertisement for the Marconi S625 screen-grid valve, from 'The Listener In' for November 14, 1928.

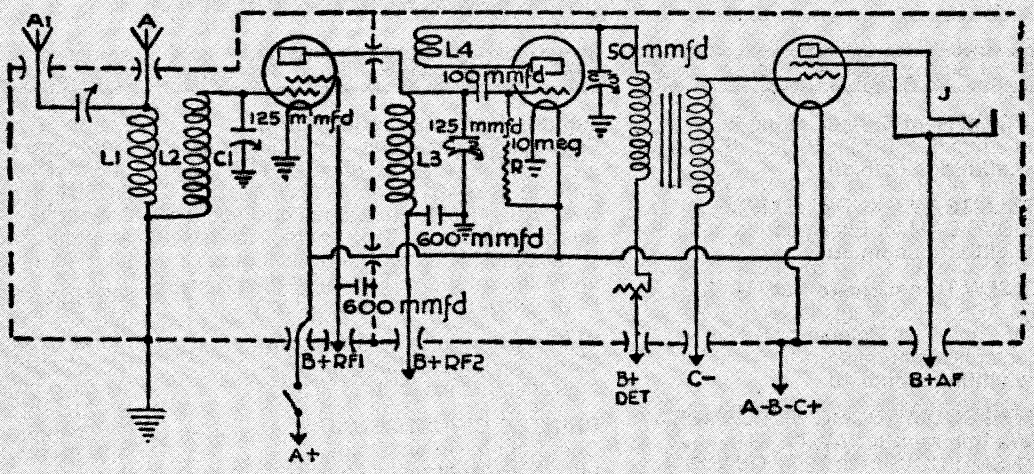

Fig.4: One of the early circuits using screen grid valves, the 'Pentrode Three' described in the November 14, 1928 issue of The Listener In.

a more likely figure, otherwise the accumulator would be flattened in a matter of minutes. 65A is about half the current drawn by an automobile 6V starter motor...)

Radiograms & dinosaurs

1928 introduced the mainly imported all-electric sets, and many models had provision for a 'pickup'. This rather frivolous term meant a connection for the magnetic head of a gramophone. After all, it 'picks up' the signal from the record, doesn't it?

The magnetic gramophone heads of the day still had steel needles, which needed changing in exactly the same manner as their acoustic counterparts; but instead of vibrating a diaphragm, they vibrated a tiny coil encased between the poles of a powerful magnet. As a result they produced an audio voltage, capable of being amplified and played through a loudspeaker.

The pickup input connection was usually straight across the terminals of one of the receiver's audio transformers. In some circuits they were placed across the primary; in others, the secondary. (Having heard a 1929 model electric radiogram, I suggest there is little to choose between it and a well designed acoustic gramophone.)

To facilitate the new radio-gramophones or 'radiograms', came the electric gramophone motor. The earliest were advertised as being suitable for AC or DC operation, thereby indicating a series-wound motor. Quite often these were placed in enormous and elaborate cabinets, and have been nicknamed 'dinosaurs' because of their size. Such an example is the Centurion Phono & Radio illustrated in Fig.3. This style of cabinet endured for four or five years until about 1932, but were only affordable by the well-to-do. Such samples are quite rare, and possibly represent the most artistic of all radio cabinets ever made. They are keenly sought by serious collectors.

Other products

Many of the items familiar to vintage radio collectors and enthusiasts can be traced back to 1928. AWA's 'Ideal' audio transformers and logarithmic tuning capacitors, for example; 'TCC' bypass and filter capacitors (paper with wax impregnation) in their familiar rectangular metal can; Emmco 'centra-line' tuning capacitors and 'pep-punch' audio transformers; Radiokes coils, chokes and other components; and last but not least, 'Eclipse' components.

One other item which seems to have prominent advertising in 1928 were the first portable radios. There were no shortage to choose from, including the Astor 'Porta', 'Airmaster', 'Airzone' (the same thing?), 'Kodel' 1-valver and the 'Traveler' five valver obtainable from Warburton Franki stores in Melbourne, Sydney and Brisbane. United Distributors were also offering their own brand, in all-leather cases.

Astor didn't only release their Porta model; they also introduced the Shielded Two, Shielded Three, Little Astor, Astor 5 valve neutrodyne, and Astor All-Electric. The five valve neutrodyne and all-electric models were available in table or console cabinets for a higher price.

But probably the most visible of new products in 1928 were the all-electric sets. These were mostly imported sets made by the large American firms that are familiar to today's collectors: Stromberg Carlson, RCA, King, FADA, Freshman, Udisco, Centurion as previously mentioned, and Crosley were all available. Being American, these had a very predictable valve line-up as mentioned before. However, the prices started at about £55 and went upwards.

In competition with these electric sets were the battery eliminators and trickle chargers that would enable the owner of a four or five valve battery set to operate it almost as an electric set — i.e., just plug it in and forget it. These were available for as little as £12 - £15, providing a more economical alternative.

Summary

Technically, 1928 would have to be remembered for the introduction of the screen grid valve, and a circuit for just such a set appeared in *The Listener In* for November 14th, 1928 — fairly late in the year.

The circuit is illustrated in Fig.4. Entitled 'The Pentrode Three', it's essentially a simple Reinartz detector with one screen-grid valve ahead of it as an RF amplifier, and the other following it as an audio amplifier. Plug-in coils for L1, L2, L3 and L4 adapted the RF and detector stages for short wave listening. ❖