VINTAGE RADIO

by Roger Johnson

The Zenith Trans-Oceanic: 'Royalty of Radios'

There are collectable radios and collectable radios, but the Zenith Trans-Oceanic seems to have attracted a mystique of its own and has almost cult status.

THE TERM 'ROYALTY of Radios' is actually the title of a book on Zenith Trans-Oceanics by Bryant and Cones, which covers the complete history and how to identify a given model from the serial numbers, etc. But alas it contains no circuits.

The inspiration for this month's column actually came about when I was requested to repair a Trans-O. At that stage I had never actually seen one of these sets, let alone had any experience using one. So it was a matter of searching the internet, to see what information was available, troubleshooting tips and so on.

Having had to go through this research and then tackle the job, I thought it would be a waste not to pass on what I found. If you too have an interest in vintage radios I think you'll find it quite good reading.

Background

Punching 'transoceanic' into my search engine came up with the goods. The brief history that follows is largely taken from 'Padgett's Trans-Oceanic Page' (dot com?). So too did a reprint of the US Army Technical Manual for the military version, called the R520B!

An exact circuit for the model concerned, alignment instructions and coil assembly layout was obtained from a mail-order house in the US, whose e-mail address was found whilst browsing the net.

Trans-Oceanics were first released by Zenith in 1942 as the 'Clipper Deluxe' model 7G605 covering six bands: the AM broadcast band, and then five bandspread shortwave bands, viz. 49M, 31M, 25M, 19M and 16M. Production was suspended in April 1942 for wartime committments.

Post war, the model 8G005 was released from 1946 to 1949, covered the same wavebands, and according to the research material, had 8 'loctal' tubes. It was this model that had the optional adapter and switch for 220V AC operation.

Fig.1: The Zenith Trans-Oceanic L600 in all its glory. It dates from 1954.

Also released in 1946 was a budget priced G6004Y 'global' model, covering the broadcast band and the rather unusual short-wave band covering 9.5 - 12.1MHz; and also the G6001 'universal' version, a broadcast (BC) band only model where the name signified only operation from AC or DC power mains, or batteries. Sales of the 6G004Y were poor, and production did not continue.

From 1950 to the end of the valve models in 1962, there are more similarities than differences. Assiduous collectors will no doubt identify and spot all the nuances at 100 paces.

It would appear, for the sake of brevity, that the features common to all those models were:

(a) the similar looking carrying case;

(b) the use of the curiously called 'wave magnet', which in reality is a loop-coil antenna for the broadcast band;

(c) battery and mains operation, and mains operation for 110V AC, 110V DC and 220V AC;

(d) tube types 1L6, 1U4, 1U5 and 3V4 and a type 50A1 'barretter' (current regulator) tube; and

(e) coverage of seven bands, namely BC, 2-4MHz and 4-8MHz general coverage/marine, and four shortwave bandspread bands for the 16, 19, 25 and 31 metre bands.

Construction & finish

Like most American gear of the era, it is bold, solid, artistic, looks-as-though-it-should-work and well put together. The carrying case is made of timber and standard models were covered in what we call 'leatherette' but Americans refer to as 'staghorn'.

There is a lift-up flap covering the dial and controls, and a hinged rear panel. Also included are comprehensive log charts. Deluxe models were covered in leather, but cost another US$20 to buy. (Trans-O's sold for about US$120 at the time — very pricey by contemporary Australian standards.)

Band selection is via self-cancelling push buttons. Included is a whip antenna for short waves, external antenna and earth connections, the 'wave magnet' which doubles as a direction finder, and a VERY effective series of four tone control switches referred to as the 'Radiorgan'. The single dial lamp is supplied with its own separate battery, pushbutton activated, and there seems no provision to operate the dial lamp from the external power source!

All in all, it is a most attractive unit, and whether the performance was good or otherwise, the very appearance just reeks of quality. American philosophy was that a top performer should look like a top performer. (I agree!)

Additionally, all components were treated against moisture and other climatic conditions to enable it to obtain optimum performance anywhere in the world, regardless of the prevailing climate.

Incidentally the 'wave magnet' has a special extension cable, and is detachable from its position in the case to enable it to be placed against the window of cars, planes or trains.

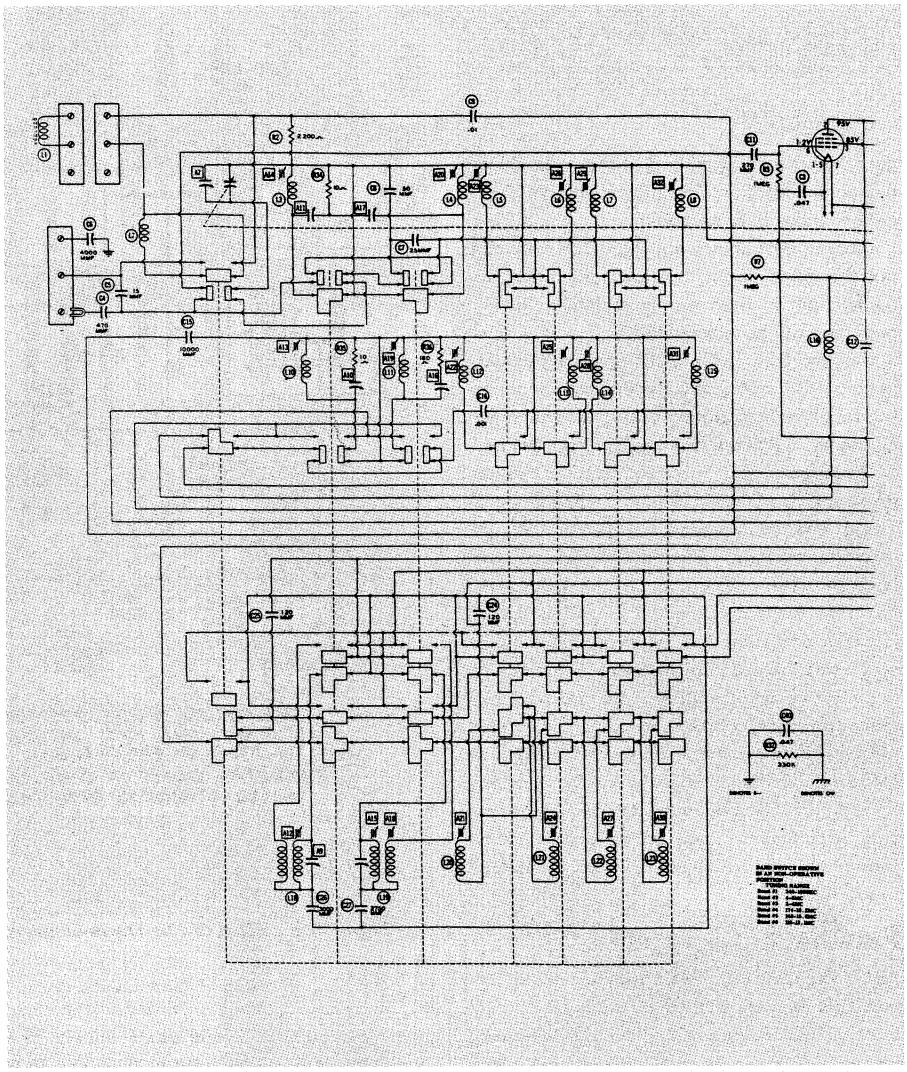

Fig.2: The complicated band switching of the L600's front end.

The circuit

The model which I was asked to repair was an L600 (chassis type 6L40) of 1954 vintage. Apparently, this model is similar to the military version. The circuit is a well designed five-tube superhet consisting of a type 1U4 tuned RF amplifier, a type 1L6 mixer/oscillator, a 1U4 as 455kHz IF amplifier, a 1U5 detector/audio amp, and a 3V4 in the output. The power supply is transformerless, consisting of a half-wave selenium rectifier with current regulation for the series-connected filament chain via the 50A1 barretter.

As mentioned the wavechange facility is via self-cancelling pushbuttons in an extremely complex switching arrangement. Each switch bank consists of two rows of up to 12 pairs of contacts, and in the actual switching, carefully designed connecting bars connect between selected groups of contacts, such that adjacent pairs are connected to each other, connected to opposite contacts, or become open circuit, and in the process connect the correct coil in circuit and in some cases, short-circuit coils that are not used. The front end is shown in Fig.2 to give an idea of the complexity.

Although complicated, the front end doesn't hold any real surprises. Moving on, though, we find a rather unorthodox IF amplifier. Instead of supplying the screen of the 1U4 via a normal dropping resistor of around 20k and bypassing it with the time-honoured 0.1uF, the designers 'decoupled' the anode circuit with a 1k resistor and a 3nF capacitor. The screen and the cold side of the IFT are supplied from this point.

In reality, the 3nF capacitor in conjunction with the 1k 'isolation resistor' provides a feedback path to the screen, to neutralise the signal grid-plate capacitance. With a carefully chosen value of capacitor (3nF), the gain of the IF amplifier can be increased considerably without causing it to self oscillate.

The tone control

The 'radiorgan' tone control is also very unorthodox, but very effective. An exploded diagram is shown in Fig.3. It depends on an inverse feedback voltage obtained from a tertiary winding on the output transformer, fed back to the volume control. (Let's hope the set doesn't have any difficulties here, because a special trensformer core would have to be re-wound in the event of an open-circuit primary.)

The diagram shown is taken from the military version, but is in every way similar to the 6L40 apart from part numbers. The tone control resistor-capacitor network consists of R16, R17, R32, R33, R34, R35 and capacitors C47, C48 and C49. R32/33/34/35 form a voltage divider across the tertiary winding of T3.

The function of the four switches is to alter the R-C network frequency characteristic, which results in a change to the audio response. C48 in parallel with R33 makes the network frequency dependent. When the S2B 'Bass' switch is open, as well as S2D being open, C48 in effect reduces the value of R33 at the higher frequencies. The out-of-phase higher frequencies appearing at the junction of R17/32/33 are increased, and are mixed with the high frequencies from the

detector at the signal grid of the 1U5, thereby causing attenuation of the highs. By implication, there is bass boost.

Closing S2B shorts out R33/C48 and cuts out the bass boost, but because the feedback chain is then purely resistive, all frequencies will be attenuated.

Closing S2C with S2B open effectively makes R34 frequency dependant, and has the result of attenuation of the mid-range frequencies. S2D simply alters the total amount of feedback, and with all switches open, feedback is minimal at high frequencies — giving effectively treble boost (hence the 'alto' designation). Closing S2A provides treble attenuation, regardless of the settings of the other switches.

When you hear the receiver in full flight and experiment with the switches, it becomes clear that there are 16 different combinations — many of which are very effective in filtering out or boosting a desired frequency range. It is a very, very effective tone control, and is abundantly simple. Mind you, a tertiary winding on an output transformer has yet to be seen on an Australian made radio!

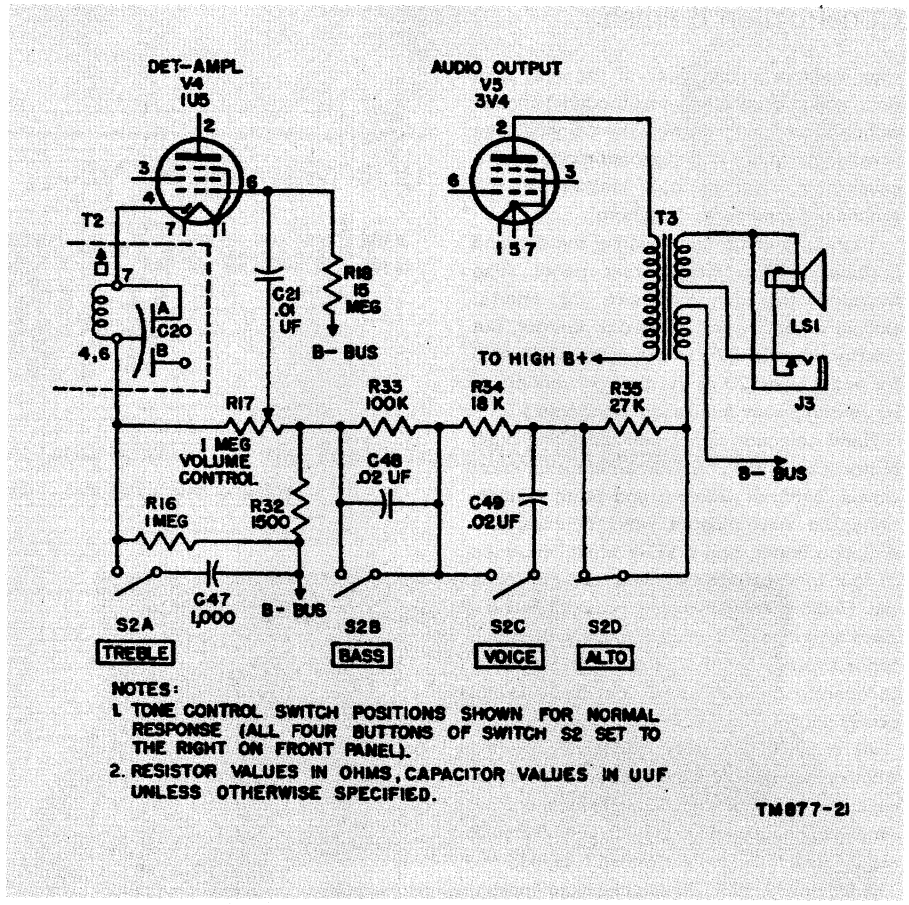

Fig.3: The circuit of the Trans-Oceanic's 'Radiorgan' feedback tone control, which is surprisingly flexible and effective.

Faultfinding & repair

As I discovered, the chassis must be removed from the case in order to do any faultfinding. To do this, the whip antenna must be removed, and for this a tube spanner is required. The mains plug needs to be removed as well.

There are two self-tapping screws holding the chassis to the shelf of the battery compartment. The dial lamp also needs to be removed from the chassis, as its wiring is integral with the cabinet...

If your set is like the one I tackled, the power supply is probably going to be the most likely source of trouble. There is no transformer, and the mains input unit is nothing more than two resistors, a linkpin to select input voltages and a diode in an air-cooled cage.

There is an additional diode in this model. The link pin leaves the cage diode out of circuit for 110V AC or DC operation, and then selects voltage dropping resistors for 220V AC and for DC. There are in effect two diode rectifiers in series, and after filtering, at the cathode of barretter M1 the stated voltage is 115V. The 50A1 drops the necessary 95-odd volts to the series connected filaments, which draw 50mA.

The chassis is isolated from B-, which means a suitable point in the power supply must be found in order to read voltages. Potential trouble spots are a burnt-out 130W resistor or rectifier in the power supply, or a burnt out 50A1. This tube is available from the US, but at a healthy cost (about A$50). There is a solid state replacement which is available at a lower cost, and it appears that some repairers have merely replaced it with a suitable resistor.

This latter course is most inadvisable unless great care is taken to determine the resistor's precise value. To do this, the tubes should be removed, and 27Ω resistors poked in socket pins 1 and 7 of V1 to V4, with a 56Ω resistor poked in pins 1 and 7 of V5. This represents the actual filament load placed on the barretter or its substitute resistor. The substitute resistor can then be carefully adjusted until the voltage across the filament chain is precisely 9.0 volts.

If you are replacing M1 with a solid state diode, a higher voltage may be obtained, and a wise precaution would be to go through the exercise just described, and if necessary, increase the value of the 130Ω voltage dropping resistor R31.

Alignment

Although quite precise alignment instructions are available, my advice is that if the set works, and works well, LEAVE WELL ALONE! All sorts of difficulties can be expected, especially if you're not experienced and well seasoned in the gentle art.

Indeed, in the receiver under test, in daylight hours and with only about six feet of antenna trailing along the floor, many many shortwave stations were received at a healthy volume. Additionally, no shortage of AM stations were received on the broadcast band, with the 'wick turned up'. Given that this is essentially a battery set with about 240mW of audio output maximum, it was decided that performance was unlikely to be improved.

In this sort of situation, attempting any re-alignment would be a hiding for nothing. Of course, if some well-meaning meddler has already 'had a go' and the performance is poor, then there is no alternative...

Performance

The foregoing should have well and truly primed the reader to expect excellent results, and excellent results they are.

In fact the performance of this set is nothing short of brilliant. The bandspread facility almost puts it in the 'communications' class of receiver. It is little wonder that the Trans-Oceanics have been dubbed the 'Royalty of Radios', and their place in history is assured. ❖