BY ROGER JOHNSON

Four-Valve Sets - Part 1

In the 1920s, the four-valve radio was very popular in Australia because while reasonably priced, it gave good selectivity and sufficient audio power to be able to listen to interstate stations. There were some interesting designs in those early years, as we'll see.

IN THUMBING THROUGH volume 1 of Alan Douglas's book *Radio Manufacturers of the 1930's* (Vestal Press, New York, 1988), it is hard to spot a four valve receiver. Yes they are there, but by far the more numerous are five-valve-plus radios, in many a fancy cabinet and with price tags to match.

Amrad, early Crosley 'combination sets', Cutting and Washington, Dayfan and some of the other US brands did have four-valve sets in their product range, but you certainly have to look hard to find them. This is quite different from the Australian market of the same time, and it is difficult to imagine why. Perhaps the higher relative affluence in the United States meant that radio was more of a status symbol – whereby you bragged to your neighbour that "my radio has seven tubes", and so on.

Two of the early starters with a four-valve radio and which were household names are Atwater Kent and Browning Drake. Atwater Kent offered the 'breadboard' models 4052 and 4066, as part of the seven available models for the 1922/3 season. These curious sets had but one tuning circuit. Atwater Kent chose not to pay the royalties for regeneration or neutralisation. Instead, the stage ahead of the detector could be made regenerative by the owner – if he purchased a regenerative unit, wired it in himself and replaced the untuned RF coupler! (From Douglas, *Radio Manufacturers of the 1920's*, Vol.1.)

Atwater Kent's more recognisable four-tube sets are the breadboard model 9 and the compact model 19, each with a single tuning stage ahead of the tuned detector followed by two stages of audio. There was no regeneration or neutralisation of the RF stage.

However Atwater Kents were not sold in Australia until the model 20C. To be more locally minded, one of the earlier recognisable four-valve sets of significance was the Browning Drake. This receiver has already been covered in this column by Peter Lankshear, with details on how to rebuild one (November-December 1994).

The two RF plus two audio stage lineup is/was standard fare for the four-valve radios in this country, where four valvers seem to have always been in more relative abundance than the United States. That is certainly true in the early years, if thumbing through the advertisements of the popular magazines of the 1925 to 1928 era for all-triode radios is any guide. There is, however, some variation in how these sets were achieved.

'Tuned anode'

This type of receiver enjoyed considerable popularity in the period 1925/6. As the name implies, the second tuned circuit is in the anode of the RF amplifier rather in the grid circuit of the detector stage. One such circuit which appeared in the *South Australian Wireless and Radio Weekly* for August 26, 1925 is shown in Fig.1. Needless to say, there is a fairly apparent omission: the grid capacitor and grid leak for the detector stage (second valve).

These items are definitely part of the circuit because they are discussed in the text. However, this circuit is an example of the typographical and draughting errors that occurred in radio magazines of the mid 1920s. While we may politely smile today, producing such a magazine must have had its problems – no doubt on a shoe-string budget and in all probability with a staff of two (a printer and 'the rest').

Back to the circuit. The text is only one page in length, with a goodly portion of that page devoted to preparing the panel to make it look nice. There is no parts list or wiring diagram, and only a postage stamp sketch of the panel layout. We have deduced that there would be a grid leak and capacitor, but the arrangement of the coils is puzzling.

The circuit suggests that reaction is achieved from the detector stage to the tuned anode coil by means of a vario-coupler. The panel sketch suggests honeycomb coils are used, and the coupling is achieved by positioning one coil closer to the other by using a variable two-coil holder. However, the sketch shows a three-coil holder, i.e. one in which the centre coil is fixed in position and the two outer coils are varied in position with the central one. Next to the three-coil tuner is a single coil marked 'TA'. If the sketch show-

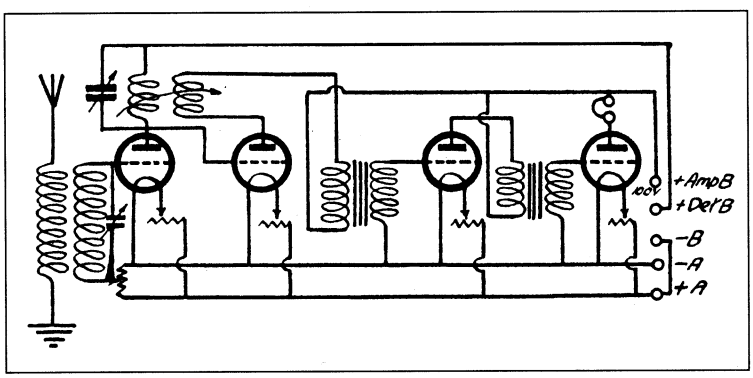

Fig.1: *A tuned anode four-tube receiver described in the S.A. Wireless and Radio Weekly for August 26th 1925.*

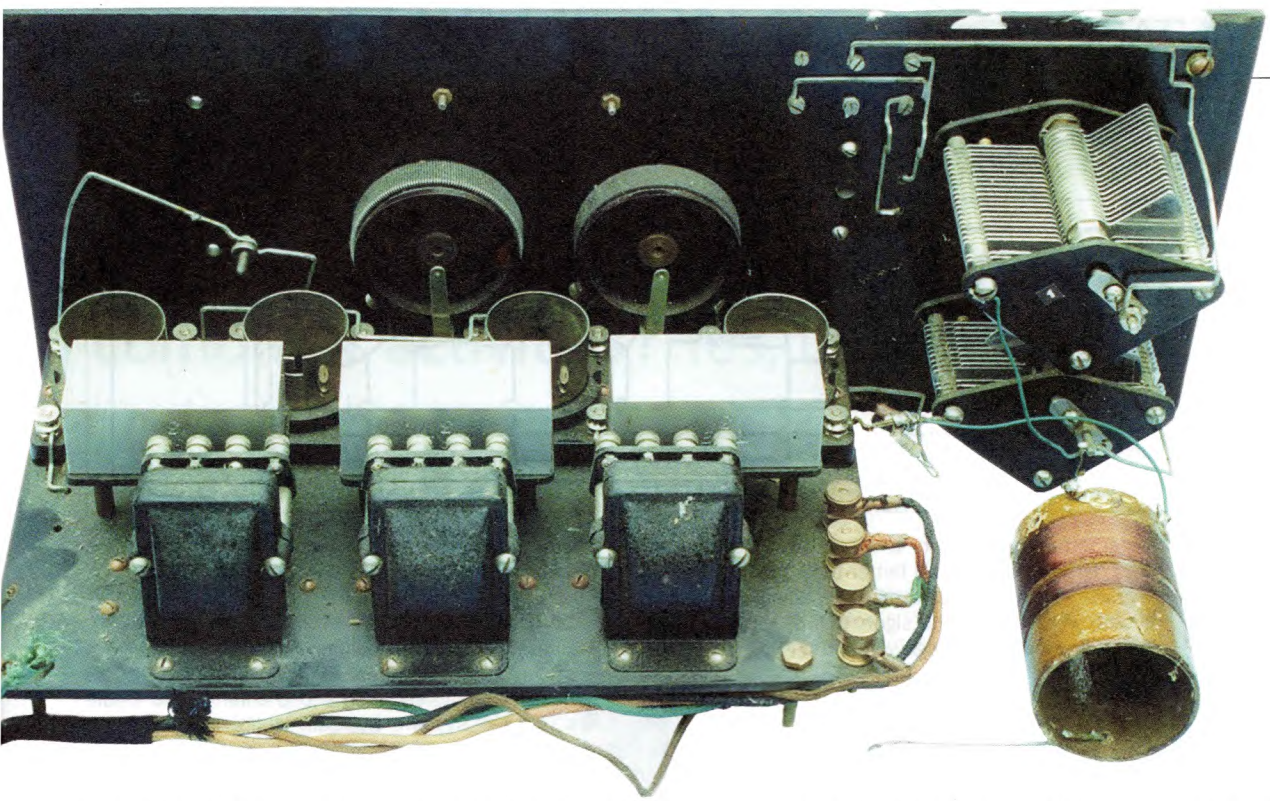

Fig.2: *Inside an unusual four-valver sold by Adelaide firm Harland in the 1920s. There are no less than six audio transformers, and only one RF coil.*

ing the layout of the panel is to be believed, the coils are all along the same axis.

Does this mean that coupling between the antenna coil and the tuning coil (fixed in position) is varied, and then the other outer coil from the three-coil holder is varied to the stand-alone anode coil? If that is the case, one would think that it would have become a very effective tuned grid-tuned plate oscillator, with no hope of taming it!

Perhaps the secret lies in the judicious use of the rheostats in the filaments of the RF stages in particular, and the rheostat for the bias return of the grid in the RF stage. Whatever the explanation it must have worked well enough, for it was claimed that 3LO Melbourne could be separated from 5CL in Adelaide.

Other variants of anode tuning used solenoid coils, in which reaction was usually effected by a rotating 'tickler' coil inside the anode coil. The common features are that the two tuning circuits were in the grid and plate of the first valve, and detection took place in the second valve. Reaction was from the detector valve back across to the tuned anode coil of V1 and was adjusted by variable coupling. This is whether the duo-lateral coils in a two-coil holder were used, or solenoid coils with the tickler described above.

Neutralised RF stage

The neutralised RF stage was also a popular circuit, and when combined with a regenerative detector it worked quite well. Neutralisation involved feeding a small amount of signal from the plate to the grid which was 180° out of phase with the grid, so that it 'neutralised' or cancelled out the signal already fed back from the plate to the grid via the inter-electrode capacity of the valve (Cg-p). By so doing, it prevented the tube from becoming a tuned grid-tuned plate oscillator.

Neutralisation could be provided in one of three ways. Firstly, the primary of the RF coil was centre tapped and the centre tap went to HT+. For RF this point was therefore at zero volts. One end of the primary went to the anode, and the other end was coupled via a small variable capacitor equal to the Cg-p of the valve. Each end of the primary was always 180° out of phase with the other – just like the centre-tapped secondary of a mains transformer.

It seems that this circuit was a little difficult to manage. In another popular method, a tapping is taken on the secondary or tuning section of the RF coil, and then fed back via the neutralisation capacitor. When these sets were presented for the home constructor, in the majority of cases no coil details were given for the set builder to wind. Instead, commercial varieties were specified as part of a kit. However, in case anyone is wondering, the tap was about 30% of the way along from the earthy end of the coil.

The third method of neutralising, which was adopted by some Astor models in the later 1920s, was simply to connect a neutralising capacitor from the detector stage tuning circuit to the RF stage grid.

The text describing the construction of a particular 1925 neutralised set has to be read to be believed. Valve type 201-A's are mentioned as a suitable valve for this receiver. Also mentioned are 'large' and 'small' tubes. (It is not known if a 201-A was

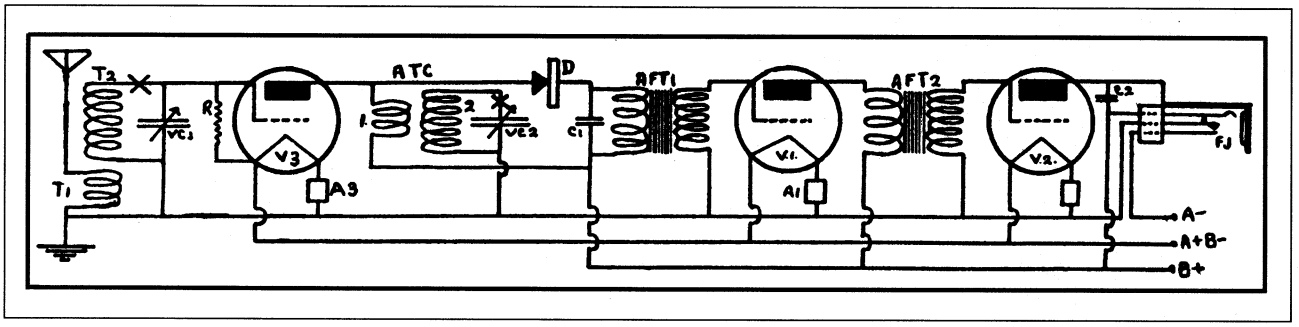

Fig.3: *This is the kind of circuit configuration which may have been used in the Harland set, taken from The Listener In for February 13, 1926.*

regarded as a bigg'un or a littl'un.) But did you know that 'large' tubes have a better tone quality on strong signals, because 'this is due to loading in the small tubes, which makes the signal thin or scratchy'. Well, bless my soul. The things you find out!

'Harland' four valver

Harland Wireless Supplies of Gawler Place, Adelaide city, were one of a plethora of dealers-cum-builders who existed in the major cities in the mid 1920s. In the only example of their four-valve sets seen by the author (Fig.2), there are a few anomalies.

For example, and as you can see from the photo, there are two rows of three audio transformers. Not only that, but each set appears to be wired in parallel. They appear to be intact, and one 'set' has very low DC resistance for the windings (about 50 and 70 ohms per side).

Given that these peculiarities could be sorted out and explained in time, there remains the RF end. It does seem quite apparent that there are three stages of audio. So, what exactly was in the 'front end'?

There is evidence of great modifications here, but there are two tuning capacitors in place. The usual RF amplifier and detector configuration would not be possible with three stages of audio. If reflexing was a candidate, the RF amp would have to double up as an audio stage, but the fairly complex wiring suggests otherwise. All three audio stages are neatly in a row.

One possible explanation is the circuit of Fig.3, adapted for an extra stage of audio. Here we see a tuned RF amplifier, followed by a further tuning stage and a crystal detector, then followed by the audio stages. The text for this article (from *The Listener In* for February 13, 1926) goes on to say that crystal detectors in this situation are not nearly so 'touchy' as a detector in a crystal set.

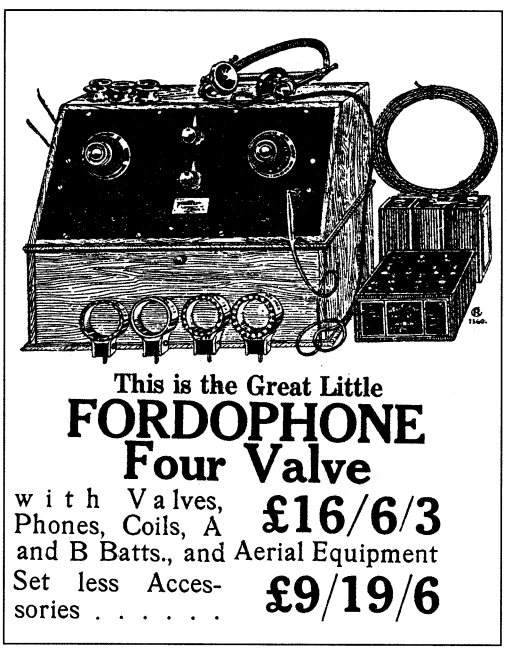

Fig.4: *An advert for the 'Fordophone' four valve set, taken from The Listener In for December 26, 1925. There were many such advertisements in Australian magazines of the time.*

Other circuits

Regular readers of this column will no doubt recall the 'Flat Dwellers' Four' described in the August 1998 issue. This four-valver used a loop antenna and a curious reaction system. Basically, there was only one tuned circuit; the loop antenna stage. The RF transformer was untuned and served merely to provide reaction. Not shown (along with the grid leak and the grid capacitor, which were also omitted) is the fact that the RF transformer is vario-coupled. In other words, a two-coil 'tuner' is required.

Just where the advantage of a fourth tube lies in this type of set is a bit blurred. Certainly V1 would offer some gain ahead of the detector. However, there would be no tuned RF gain to improve selectivity at the detector stage, resulting in only one regenerative tuned circuit. All this could arguably be achieved by a conventional three-tube set with regenerative detector.

One other way of achieving RF stability without neutralisation was that employed in the 'Marco Four' circuit reprinted in *The Best of Australia's Wireless Weekly in 1927*. This is quite a conventional circuit with a tuned RF stage and detector, variable capacitor reaction and two audio stages. In this circuit, the spacing, and hence coupling from the RF primary to the secondary was adjusted for best results. The RF primary was wound on a separate former to the secondary, and the two were placed lying down on the baseboard.

Once the optimum coupling was found, they were held in place by passing a piece of bakelite or panel material along the insides of the formers and then screwing it down to the base board to hold them in place. So much for losses!

'Commercial' brands

On thumbing through the Australian magazines of the 1925 to 1928 era, there's no shortage of four-valvers being offered by the department stores in the major cities. These radios were either unbranded, or had the stores' own brand names on them. Small dealers often made and sold this type of set also.

Just who made them for the department stores was anyone's guess, and where are they today? They are and were probably even then often regarded as 'home maders' and of little or no technical interest.

A typical example is shown in Fig.4, which is the advertisement for the 'Fordophone' four-valver from Melbourne dealer Norris & Skelley. ea

BY ROGER JOHNSON

Four-Valve Sets - Part 2

This month we're continuing our look at four-valve receiver designs of the late 1920s, moving to some of the more interesting designs of that era. Overall, four-valve radios would of course encompass just about half the radios ever made in the valve era, especially in Australia.

IN THE EARLY to mid 1920s both Britain and America seemed to have reduced numbers of four-valve radios in their range, but whereas America opted for five, six and seven-valve sets, Britain seemed to favour one, two and three-valve radios, with lesser numbers of designs with more valves. This is a fairly broad generalisation and any amount of exceptions can be provided, but anecdotally, it appears to be the case.

It's not that easy to find samples of British four-valvers in this country from the mid 1920s. However there are many Australian department store brands, and many were home built. In the latter 1920s, if the advertisements in the popular magazines are a guide, the preference was to America for imported radios of all descriptions.

When referring to electric sets, do we consider the rectifier as a valve? Up until the early 1930s, a 'valve' meant an amplifying valve, and so a rectifier was excluded in the valve count. But valve manufacturers and technical people pointed out that the criteria should be whether or not it is a thermionic vacuum tube, and not merely an 'amplifier'. Hence the rectifier became included in the valve count, no doubt to the delight of many a salesman.

For the purposes of this article, though, we will use the prevailing attitudes of the day and exclude the rectifier from the valve count.

Battery triode circuits

Even toward the late 1920s, circuits using battery triodes were still popular. One such circuit using the standard tuned RF and regenerative detector is the 'Bush 4 Valver' described in *The Listener In* for June 12th 1929.

As the name implies, this was the set for bush 'cockies' and efficient antenna coupling went a long way to achieving the best performance. So in this slightly different circuit (Fig.1) the antenna is connected via a two-position switch to either a tap towards the earthy end of the tuning coil, or to a vario-coupler.

The RF amplifier is coupled to the detector tuning coil via a small value capacitor, with an RF choke from the plate to HT. The text describes this as 'the choke-fed tuned anode system'. Regeneration is from what is a not-quite-oscillating Hartley circuit. The detector tuning coil (3) is centre tapped for the earth return, and the tuning capacitor (5) is connected across the entire winding. The anode of the detector stage is fed back into the bottom of the coil via a 100pF reaction capacitor (6).

Just in closing, this circuit really *was* intended for the 'cockies'. The text claimed that selectivity should give way to sensitivity, and that loudspeaker operation is obtainable from merely 90 volts HT in order to reduce costs.

Actually *The Listener In* for June 12th 1929 was a boon in preparing this column, for it contained three four-valve circuits, all different, and some incorporated new techniques.

Another circuit for the home constructor was described in the same issue, called the 'Home Four Valver'. This is another example of an 'all triode' circuit, but technically some features are somewhat dated. Although four valves are used, it is in reality a three-

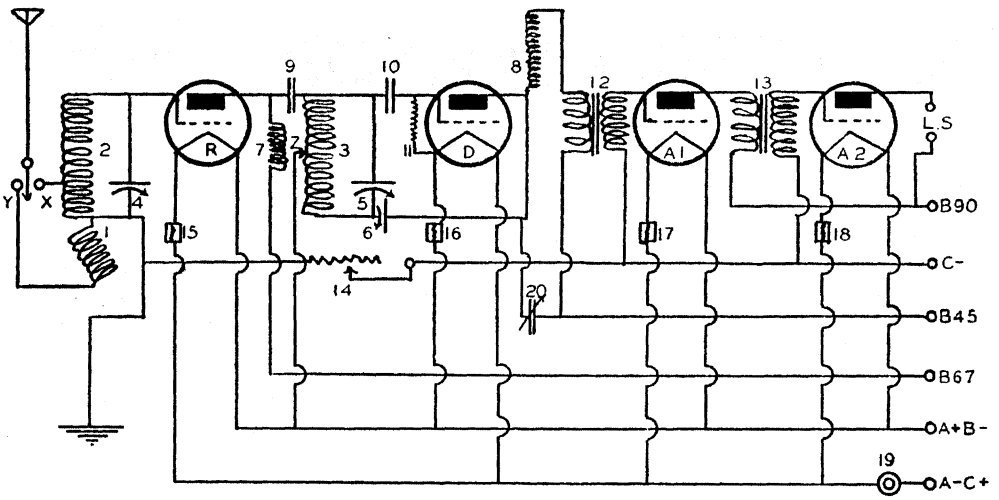

Fig.1: *The 'Bush Four Valver' described in The Listener In for June 12, 1929. It was designed to achieve high sensitivity for the 'man on the land'.*

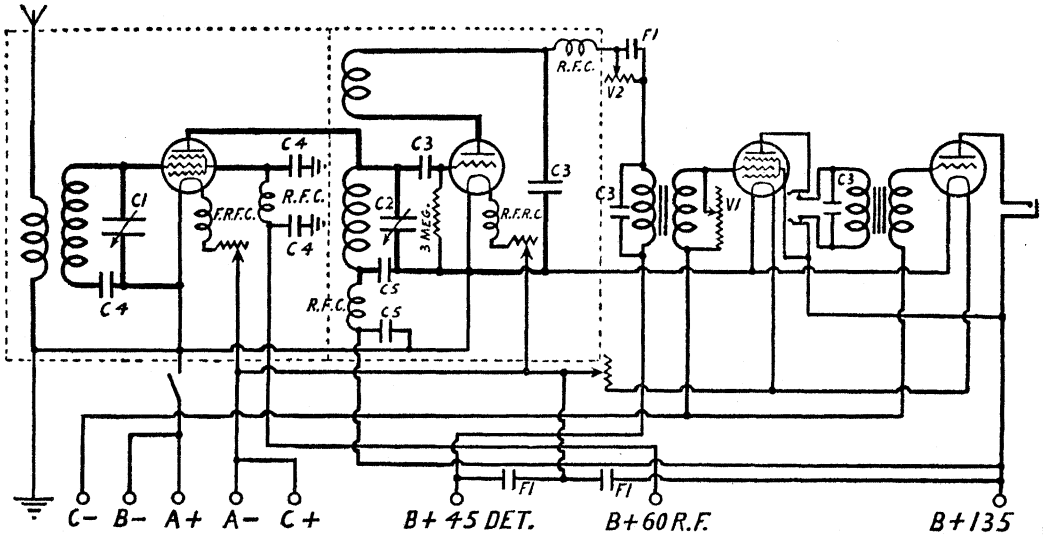

Fig.2: *A rather complex short wave set using screen-grid 'penthodes', also described in The Listener In for June 12, 1929.*

valve set consisting of a single stage regenerative detector and two transformer coupled stages of audio. The fourth valve is the dubious 'antenna coupler' seen in so many American sets from about 1925. It is an untuned RF amplifier intended to isolate the antenna loading effects from the tuned circuit. In this capacity it has a stage gain of not much more than unity.

The description of 'all triode' is given in quotation marks, for that is how the circuit appears. The two audio stages are shown as triodes, but reference to the parts list shows the audio stages as penthodes (sic). Even the wiring diagram shows UX sockets. So how are pentodes used?

The very earliest pentodes had a UX base, in which the pins were connected as a triode. But the 'extra' screen grid was connected to a grub screw mounted on the valve base. This was done to facilitate the incorporation of a 'power valve' i.e. a pentode into the final stage without modification to the existing wiring. You merely connected a wire from B+ to the screen terminal.

There are some refinements shown in this circuit. Reaction is controlled by a 6000 ohm pot in series with the 1st AFT and the B+ end of the reaction winding. It is used to vary the anode potential, and hence the stage gain, and ultimately the amount of RF fed back by the reaction winding to the tuned winding.

Another refinement is a 'volume control' R7 shunted across the secondary of AFT1. With a transformer coupled pentode, which incidentally is not the wisest thing to do, and a further pentode output stage, this set could beef out the best part of 1/4 watt, more than enough for a horn speaker. However, one would think that R7 is to prevent overloading and hence distortion of the output, rather than too much sound.

Screen grids and 'penthodes'

The term 'penthode' was the very early spelling of 'pentode'. Why the 'h' was included is anyone's guess. In any case the term was initially only used for audio or power valves. For RF applications, these valves were described as a 'screen grid'. This is an accurate description, because that is exactly what they were. They did not have a suppressor, either external or internally connected, which has been verified by examining dud specimens. So functionally they were really a tetrode, although that term only seemed to be adopted at a later time.

The final circuit from *The Listener In* for June 12th 1929 is for a short wave receiver (Fig.2). Now this is another interesting development — listening to short waves. The stations which were logged on this receiver were RFM Siberia on 70m, W2XAF New York and PCJ Eindhoven on the 31m band (amongst Australian hams of the day), and the American KGO and W2XG along with stations in the 'Dutch East Indies' (i.e. Indonesia).

In this circuit a screen grid RF amplifier is used to dispense with the need for neutralisation (which could be difficult at higher frequencies), followed by a triode detector, then transformer coupled to a pentode audio stage, which is turn transformer coupled to a triode output stage! This was included so that the set could operate with either three or four valves.

Once again, reaction is achieved by means of a potentiometer (V2) instead of a variable capacitor, and a volume control is included by shunting the secondary of AFT 1 with a high value pot (V1).

The RF and detector stages are enclosed in separately shielded compartments, and RF chokes are included in the filament circuits. Both stages are also bypassed in the screen and anode circuits. One presumes that the elaborate shielding was insufficient, and that stray RF tended to be transmitted via the wiring to any or all of those various electrodes, causing instability.

Quite elaborate instructions are given on bending the aluminium sheet into the rectangular box and partition which forms the shielded sections, but the photograph would suggest that the compartment is definitely made by a sheet metal worker. The text also describes how to fix all this metalwork to the chassis: with 'Meccano' brackets (why not?). Although a chassis is described, most of the wiring is actually above the chassis, with just a couple of pots and the old 'rectangular can' type bypass capacitors mounted beneath. Baseboard wiring was still firmly entrenched.

The tuning capacitors have been modified for a maximum capacity of about 150pF to allow ease of tuning, and coil details are given for five tuning ranges

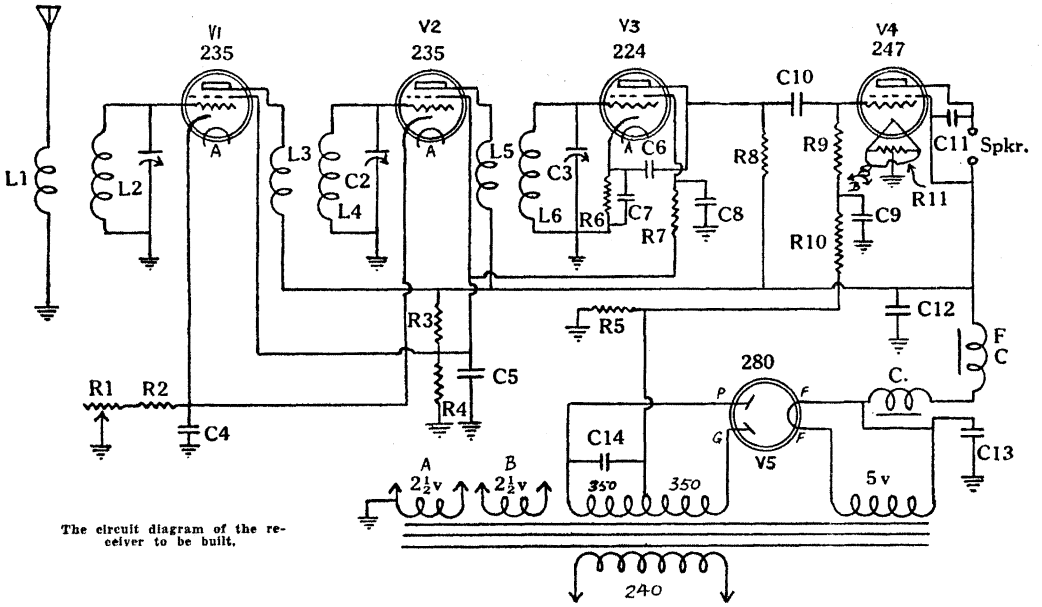

Fig.3: *The '1932 Advance' described in Wireless Weekly for January 8, 1932. It's fairly typical of the last generation of all electric four-valve TRF sets.*

— covering from 84 metres down to 13 metres. However only the number of turns is given, and no details regarding the spacing of the windings or the spacing between the windings themselves. The coils are all wound on UX valve bases, which explains why there is no RF/detector primary.

Perhaps it was assumed that this was not a set for the novice constructor, and that the operator would have had some prior experience in winding the coils and constructing and operating it. The valve types are A442, A415, B443 and B405.

Early electric sets

Referring again to *The Listener In*, there was a four-valve electric set in the October 23rd issue. This circuit denotes the beginning of the brief interval of the 4/5 valve TRF configuration popular for two or three years up until 1931, when the autodyne superhet became very popular and dominated electric receivers until the introduction of the pentagrid converter.

The 1929 circuit is a little unorthodox in that it has a first stage RF amplifier in which there is no tuned circuit at the grid. The tuning circuits are a tuned anode/tuned grid (otherwise known as band pass tuning) in the second stage and again in the detector stage.

This receiver requires a four-gang tuning capacitor and coil details which are not given, but *are the same as the battery circuit described a couple of weeks ago* (terrific!). The circuit also includes reaction, which is a dubious inclusion in a set with four tuned stages. One would think that sensitivity and selectivity, even with home wound solenoid coils, would be more than ample in this circuit without reaction. The detector stage is a grid-leak triode, which is then transformer coupled to a pentode.

The article gives an explanation of how grid bias is obtained by cathode resistors which really has to be read to be believed. One could almost be forgiven for concluding that the author of the article didn't have a clue what he was talking about. Not only that but there's no cathode resistor in the output stage anyway, to give any bias at all.

The construction details are also remarkably scant. It seems that this set was to be built on a timber base, covered with copper sheeting to act as shielding and a convenient earth for the wiring. Again, the three RF stages are placed in compartments, and the power supply is not shown.

Later TRFs

The same criticism could not be made of the '1932 Advance' described in *Wireless Weekly* for January 8th 1932, and shown in Fig.3. This circuit must have been the very last of the all-electric TRFs, because there is a little block insertion in the column proclaiming 'Next week - special superhetrodyne number'.

The 1932 Advance circuit is very typical of many of the commercial TRFs of the day. There is not a lot of variation in these sets, with the possible inclusion of a voltage divider where the volume control, together with the detector screen, is taken from the 35 volt tap.

The circuit makes a very good guide to rebuilding an unidentified derelict chassis that has a few bits and pieces missing from it. Looking at the circuit, we see nothing complex or unusual. There are two stages of variable-mu RF amplifiers type 35, an anode-bend detector type 24A and a type 47 pentode output. The anode-bend method of detection is better than grid leak detection when the input voltages are high.

Notice that with this type of set there is no band-pass tuning or a four-gang tuning capacitor to complicate things.

One departure from the system used by many set manufacturers is the inclusion of a 250,000 ohm anode load resistor (R8) where an audio choke is more commonplace. The choke has a lower DC resistance, and hence the valve can operate at a higher anode voltage and thereby has a higher gain. The inductive reactance of the choke at audio frequencies forms the anode load, and not merely the DC resistance.

In conclusion, four-valve sets were plentiful and varied in Australia in the late 1920s and early 1930s. Those described here and last month will hopefully have given you a brief insight into the variety available. ea