KIT FOR VALVE AUDIO ENTHUSIASTS

Encouraged by the resurgence of interest in valve audio over the last couple of years, Sydney firm Valve Electronics has sourced all of the necessary components and released a new valve-type stereo amplifier kit. The KTS30W is especially suitable for today's audio enthusiasts keen to discover why many of their valve-era counterparts had such a high regard for husky output triodes used in the single-ended 'Class A' configuration.

by JIM ROWE

Back in the 1960s, the long established valve-based equipment quietly gave way to the new solid state replacements with their lower power dissipation and other advantages. In the audio area, it didn't take long for most people to realise that transistor amplifiers were offering higher output, wider frequency response, lower distortion and so on, as well as smaller cases and generally much cooler operation. By the mid 1970s virtually everyone had junked their trusty valve amplifiers, or relegated them to the storage cupboard.

But as these things often do, valve technology passed through its nadir and began to rise again in popularity — partly due to nostalgia, perhaps, but also due to curiosity on the part of many people who grew up after valves had faded from the scene. In particular many of today's audio enthusiasts seem curious to find out why an earlier generation of 'golden eared' music lovers were so keen on amplifiers using husky triode valves in the output, and operating them in the relatively inefficient single-ended Class A configuration.

Have I lost you already? Sorry, let's explain some of that jargon. First of all, triode valves are those with essentially only three electrodes: a filament or indirectly-heated cathode, which acts as a source of free electrons; a grid or control electrode, used to control the flow of those electrons by means of a negative voltage; and a plate or anode, which has a positive voltage applied to it to attract the electrons. All of these electrodes are housed in a glass, metal or occasionally quartz envelope (hence the old slang term 'bottle'), which in most cases had all of the air evacuated to form a fairly hard vacuum. (Explaining the alternative term 'vacuum tube'.)

The triode was the first type of valve capable of reliable amplification. Many of the later types of valve had additional 'grid' electrodes, such as the tetrode with its *screen* and the pentode with its *suppressor* as well as the screen. These additional grids generally improved valve performance in various respects — voltage gain, frequency response, power output and so on. But they also tended to increase valve output impedance, which is one of the main reasons why 'golden eared' audio enthusiasts tended to prefer triodes: with a lower output impedance, they provided better damping for the loudspeaker.

Just as with bipolar transistors and MOSFETs, valves can be operated in one of a number of modes, offering different compromises between performance and energy efficiency. Virtually all *low power* linear amplifier stages are operated in 'Class A', where the grid and plate voltages are arranged so that plate current flows at all times — merely varying up and down in level to convey the signals being amplified.

Class A gives the most linear amplification, but requires that the valve must be operated at a quiescent current level high

Each channel of the amplifier uses a 6SN7 twin triode to drive the two 300B output triodes — which are connected in parallel, and operated in Class A.

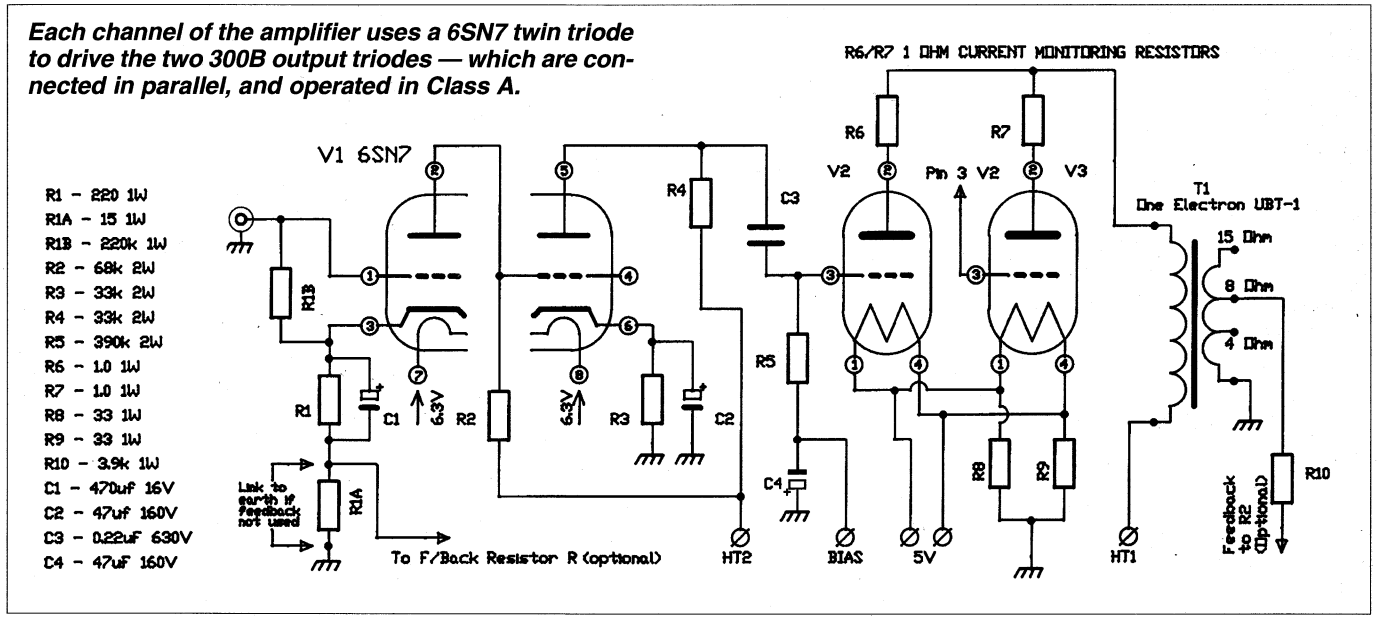

enough to ensure that the valve doesn't cut off on negative signal peaks. This means that an *output stage* operating in Class A tends to be quite inefficient, and run quite hot even when it's not handling any signals.

To reduce amplifier efficiency and reduce heating, valve amplifier designers soon came up with output stages which operated those valves in modes like Class AB or Class B, where the valves are run at significantly lower quiescent current and power levels. But because these modes result in the valves 'cutting off' for some of the signal cycle, these output stages really have to use multiple valves in a balanced 'push-pull' configuration, arranged so that one valve can take over when the other is cut off. (Most solid state amplifiers use push-pull output stages for exactly the same reasons.)

Of course push-pull operation tends to introduce its own complications, including the difficulty of achieving exactly balanced operation and of minimising 'crossover distortion' when each valve is taking over from the other during the signal swings. So at least some of the 'golden eared' audio enthusiasts in the valve era preferred not to use anything other than a single-ended (i.e., not push-pull) output stage, and operating in Class A.

Needless to say the true believers preferred to combine this single-ended Class A approach with the use of triodes as well, to ensure the lowest output impedance. To get a decent output power this generally meant the use of fairly husky output triodes like the 2A3, or for those who could afford them the famous Western Electric 300B, developed in the 1930s for use in cinema sound systems. If they wanted more output than a single output valve could provide, they used multiple valves in parallel...

By tradition this type of valve amplifier delivered 'clean' and subjectively very satisfying sound — especially when coupled with a fairly efficient loudspeaker system. Although it was not easy to provide much negative feedback, due to the limitations imposed by the output transformer, the low output impedance of the output triodes gave fairly good control of loudspeaker 'nasties', and the single-ended Class A configuration gave relatively low distortion — which consisting mainly of the second harmonic, sounds relatively 'harmonious' anyway.

'Valve sound' kit

It's the renewed interest in 'valve sound' among today's hifi enthusiasts which has prompted Andrew Kay, owner of Sydney firm Valve Electronics, to develop a kit for this very kind of amplifier. Andrew has been working with valve equipment for quite a few years, and started restoring, selling and trading valve radios under the 'Vintage Wireless Radio Company' banner in 1991. Since then the business has gradually changed, and gradually focussed more and more on repairing, upgrading and trading valve-based audio amplifiers.

The company's kit and component operations have evolved more recently, in response to demand. Nowadays Valve Electronics is offering a range of stereo and mono valve amplifier kits, along with an impressive choice of new valves, output and power transformers, valve sockets, filter chokes and other valve-era components that have become harder to obtain — plus a range of valve data books.

The new KTS30W kit provides a way to build a full stereo version of the kind of amplifier that valve-era audio perfectionists would have wanted, assuming they could afford it (and few of them could, in reality). On a generously-proportioned 80mm deep aluminium chassis (or the brushed brass plate and polished wood plinth shown, which is a higher-priced option), it provides two amplifier channels, each with a 6SN7 twin voltage amp triode driving a pair of 300B power triodes in parallel (see basic circuit).

The first section of the 6SN7 (V1) is the input stage, with the amplifier's line level input fed directly to the grid and

the negative feedback signal from the output fed to the cathode (across resistor R1A). The amplified difference signal at the plate of this stage (pin 2) is then directly coupled to the grid of the second half of V1, where it receives additional voltage amplification. The resulting signal from pin 5 is then coupled via C3 (the only capacitor in each channel's signal path) into the grids of the two 300B output valves (V2 and V3).

The output valve plates are combined via low-value resistors R6 and R7 (to ensure stability, and also allow convenient current monitoring), and then connected to the HT supply via the primary winding of the output transformer T1. This is a carefully designed wideband coupling transformer, with a tapped low impedance secondary to allow optimim matching of the amplifier into different speaker impedances.

As you can see the negative feedback is taken from the 8Ω secondary tap, and fed back to the input stage cathode circuit via resistor R10. The overall voltage gain of the amplifier from input to 8Ω tap is therefore (R10 + R1A)/R1A, or about 260.

Note that each of the voltage amplifier stages uses cathode current biasing (via R1/C1 and R3/C2), while the output valves have adjustable fixed bias. The latter allows the user to select the best compromise between power output, distortion and power consumption.

Measured performance

All measurements taken with an 8Ω load:

Power Output vs Distortion

Total Harmonic Distortion (**THD**):

14.5W	11.5% at 1kHz
10W	6.0% at 1kHz
	6.7% at 100Hz
	7.4% at 10kHz
1W	0.4% at 1kHz

Intermodulation Distortion (**IMD**):
(50Hz and 7kHz in 4:1 ratio)

10W	27%
5W	10%
1W	1.4%

Bandwidth
15Hz to 26kHz +0/-3dB

Noise & Hum
-75dB below 10W output
(mostly 50Hz/100Hz artefacts)

Output Impedance
Approximately 5.6Ω
(100Hz - 10kHz, 10W)

Input Sensitivity
200mV for 10W RMS output.

The power supply uses all solid state components and a large power transformer, with a single HT bridge rectifier feeding the two amplifier channels via individual filter circuits — each with its own filter choke, resistors and capacitors. A second small power transformer is used to produce the bias supply for the output valves, with each channel adjusted via a preset pot.

The rated performance for each channel of the KTS30W is quite impressive. Power output is 14.5W RMS into 8Ω at 1kHz, with a power bandwidth (-3dB) of 15Hz - 17kHz at 10W output. The rated THD at 10W output is below 7%, with hum and noise 70dB below 10W with the input shorted. Input sensitivity is 170mV RMS for 10W output (1kHz), and input impedance is 200kΩ (essentially R1B). This means that the amplifier can easily be fed from a CD player via a simple passive volume control system.

Thanks to the Class A output stages, the power consumption of the complete KTS30W stereo amp is around 250 watts. It's not going to make much of a contribution to conserving energy, to be sure — but on the other hand it'll help warm your listening room in winter!

Trying one out

Andrew Kay of Valve Electronics very kindly made a built-up KTS30W amplifier available to us for a few days, so that we could carry out some testing and also hook it up for listening sessions. The sample amplifier is shown in the photos; it included some of the available options, including the brass plate/timber plinth and DC powering of the 300B filaments to minimise hum.

As it happens, the unit was delivered on a Friday and I was able to spend quite a few hours listening to it that weekend, before we made any measurements. For the listening session I fed its outputs to a pair of efficient speaker enclosures, and fed it with signals from my Sony CD player via a 'passive control unit' — essentially a high-quality ganged volume control pot with a stereo input selector switch, in a shield box.

I played familiar tracks from many CDs, covering a wide range of programme information (although mainly classical, which is where my tastes tend to lie). And frankly, the KTS30W sounded very clean and 'sweet' indeed — especially on less complex material such as solo voices or instruments, chamber groups and so on. The only times that I could detect a small amount of 'edginess' due to intermodulation distortion was on loud passages of fairly complex material, such as a full choir and orchestra at 'full tilt'.

In short, an extended listening session with the amplifier was very pleasant indeed. There was very little of the cumulative 'tiredness and irritability' which

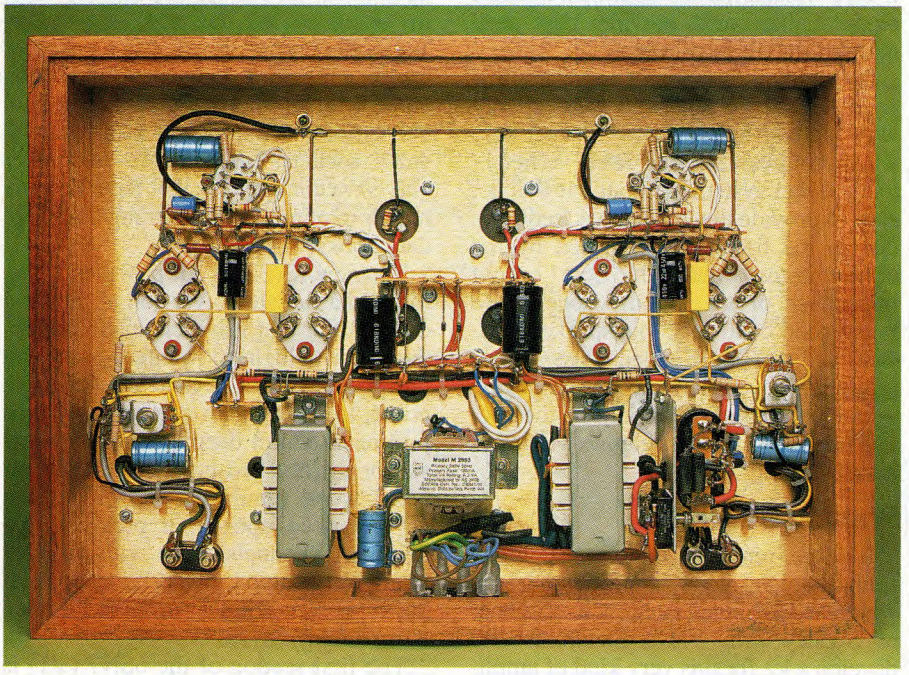

Underneath the chassis, everything is wired neatly in the old-fashioned way. The kit includes high quality valve sockets, tagstrips and other fittings.

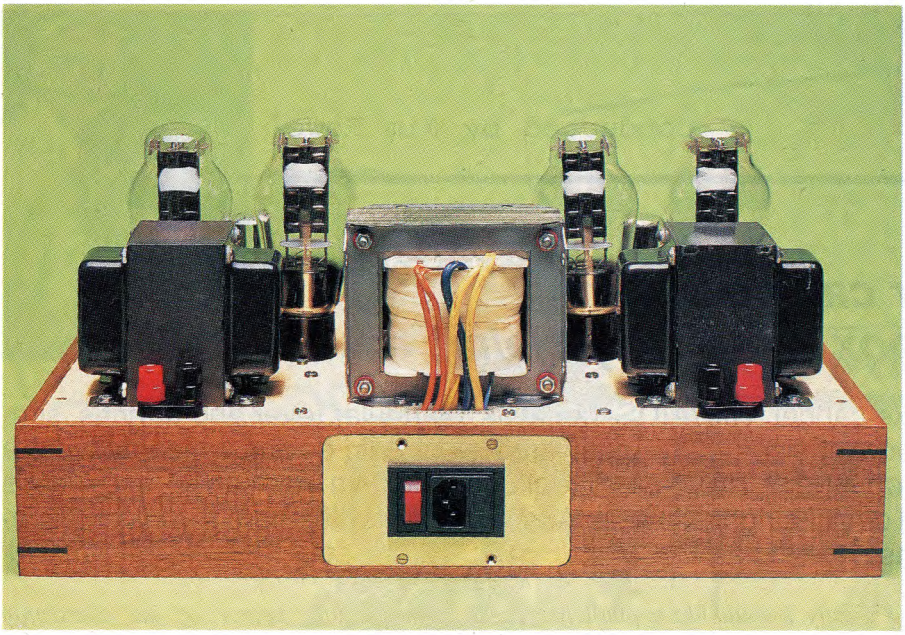

A view from the rear, showing the mains input and power switch — and the speaker terminals, just behind their respective output transformers.

have occurred after listening sessions with other amplifiers (including some using much more recent technology).

After the listening session I brought the amplifier back to our lab, where *EA* technical editor Rob Evans ran the instruments over it, to see how it measured up against the specification. And as you can see from the table, it basically met the rated figures quite easily. We'd tend to call it a 'twin 10W' amplifier rather than a 'twin 14.5W', but that's largely a matter of preference regarding acceptable distortion levels.

Of course by modern standards, the measured figures don't look all that wonderful — especially those for THD and IMD. But the reality is that in practice, the distortion products generated in this type of amplifier are far less apparent to the ear than those produced by a modern solid state amplifier when it's even approaching these measurable levels (which would be right at overload).

The bottom line is, then, that an amplifier like the KTS30W represents a very good way to experience 'valve sound' in an almost definitive form. And because the KTS30W is a kit, you can achieve this experience with less financial outlay coupled with somewhat more personal satisfaction. There's also a great deal of flexibility, as Valve Electronics can offer a choice of output valves, output transformers and other parts.

The price of the basic KTS30W kit starts at $1140 plus postage, but for those who want something a little less draining on the bank account, Andrew Kay can offer a twin 8W design using parallel 2A3 valves in each channel for a basic price of $940 plus postage. There are also single-channel 'monoblock' kits, offering single-ended 15W (300B) or 8W (2A3) amplifiers for base prices of $685 or $570 respectively, and a push-pull 12W (6BQ5s or 6V6s) design for a base price of only $375.

Of course you can also buy valves, transformers and other parts, to build up custom amplifiers of your own. So if you're interested in exploring 'valve sound', it's well worth contacting Andrew to explore the possibilities. ❖

VALVE ELECTRONICS KTS30W VALVE AMP KIT

Allows construction of a stereo amplifier using twin 300B triode valves in parallel (single ended Class A) in each channel, to give a nominal 14.5W per channel. Includes a husky solid state power supply with the ability to adjust output valve bias levels for optimum operation.

Good points: Low output impedance, flexible way to experience authentic 'valve sound'.

Bad points: Big and heavy, runs quite hot. Relatively low power output for the price, compared with push-pull amplifiers.

RRP: From $1140 plus freight, with exact price depending on options.

Available: Valve Electronics, 239 Australia Street (PO Box 467) Newtown 2042; phone (02) 9557 2212, fax (02) 9516 3981.